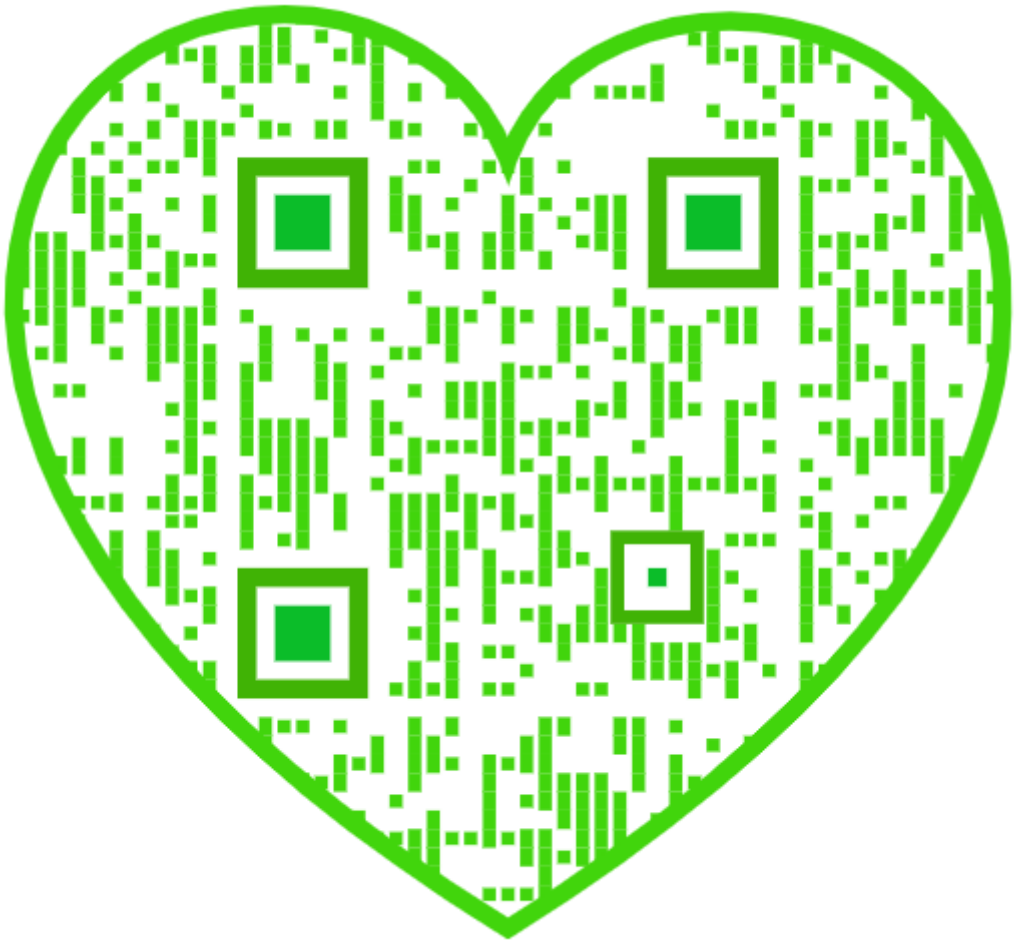

SHOP AND FOUNDRY PRACTICE

PREPARED FOR STUDENTS OF
THE INTERNATIONAL CORRESPONDENCE SCHOOLS
SCRANTON, PA.

Volume III

GRINDING
BENCH, VISE, AND FLOOR WORK
GENERAL HINTS ON SHOP PRACTICE
TOOLMAKING

WITH PRACTICAL QUESTIONS AND EXAMPLES

NEW YORK PUBLIC LIBRARY

Second Edition

SCRANTON
THE COLLIERY ENGINEER CO.
1901

2846

THE NEW YORK
PUBLIC LIBRARY
686267
ASTOR, LENOX AND
TILDEN FOUNDATIONS
R 1915 L

Copyright, 1901, by THE COLLIERY ENGINEER COMPANY.

Entered at Stationers' Hall, London.

All rights reserved.

NEW YORK
PUBLIC
LIBRARY

b

BURR PRINTING HOUSE,
FRANKFORT AND JACOB STREETS,
NEW YORK.

CONTENTS.

GRINDING.	*Section.*	*Page.*
Introduction	18	1
Grindstones and Oilstones	18	2
Grinding Wheels	18	7
Abrasive Materials	18	7
Manufacture and Use of Emery Wheels	18	11
Polishing and Buffing	18	20
Selection of Grinding Wheels	18	25
Hand Grinding	18	27
Hand Surfacing Machines	18	28
Tool Grinding	18	32
Hand Tool Grinding	18	32
Machine Tool Grinding	18	34
Machine Grinding	18	41
Grinding Solids of Revolution	18	42
Advantages of Grinding	19	1
Selection and Use of Emery Wheels	19	3
External Grinding	19	16
Internal Grinding	19	37
Surface Grinding	19	45
Cutter and Reamer Grinding	19	47
Purpose of Tool Grinding	19	47
Tool-Grinding Machine	19	48
Examples of Cutter and Reamer Grinding	19	50
Lapping	19	63
BENCH, VISE, AND FLOOR WORK.		
Introduction	20	1
Bench Work and Laying Out	20	2

BENCH, VISE, AND FLOOR WORK—*Continued.*	*Section.*	*Page.*
Tools and Fixtures Employed	20	2
Files and Filing	20	41
Use of Files	21	1
Scrapers and Scraping	21	15
Kinds of Scrapers	21	15
Scraping a Plain Surface	21	19
Hand Drilling, Reaming, and Thread Cutting	21	20
Reaming	21	20
Tapping	21	24
Wrenches	21	27
Outside Thread Cutting	21	33
Pipework	21	35
Hand Drilling Machines	21	42
Fitting Keys	21	45
Keys Having Curved Section	21	46
Broaching or Drifting	21	47
Laying Out	21	53
Laying-Out Tools	21	55
Subdividing Circles	21	58
Examples of Laying Out	21	69
Floor Work	22	1
Blocking	22	1
Machine Foundations	22	13
Erecting Floors	22	14
Floor Pits	22	19
Use of Erecting Pit	22	25
Driving Fits, Pressed Fits, and Shrink Fits	22	29
Hoists and Cranes	22	38
Erection of a Lathe	22	46
Erection of a Planer	23	1
Milling Machine Erection	23	11
Engine Erection	23	17
Erection of a Horizontal Stationary Engine	23	18
Erection of a Vertical Stationary Engine	23	31
Locomotive Erection	23	35

General Hints on Shop Practice.	Section.	Page.
Lubricants	24	1
Cutting and Fitting Sheet Lagging	24	10
Heat Insulation	24	12
Painting Machine Tools	24	13
Machinists' Indicators	24	13
The Ram	24	17
The Soda Kettle	24	17
Compressed Air for Cleaning	24	19
Boxes, Pans, and Trays	24	19
Keeping Machine-Shop Tools	24	22
Cost of Construction	24	25
Time Element in Work	24	26
The Scrap Heap	24	28
A Sectional Key	24	29
Rigging	24	29
Useful Information and Receipts	24	45
Toolmaking.		
General Tool-Room Work	25	1
Methods of Procedure	25	1
Dimensioning Drawings	25	4
Reading Decimals	25	6
Work of the Toolmaker	25	7
Measurements	25	8
Limitations of Toolmaking	25	13
Special Tools Used in Toolmaking	25	14
Cutting Tools and Appliances	25	21
Design and Construction of Taps	25	21
Dies for Thread Cutting	26	1
Reamers	26	11
Counterbores	26	35
Hollow Mills	26	39
Milling Cutters	27	1
Gauges and Gauge Making	27	23
Integral Divisions of Circles and Lines	28	29
Division of a Circle	28	29
Division of Lines	28	40

TOOLMAKING—*Continued.*	*Section.*	*Page.*
Diemaking	29	1
Cutting Dies	29	1
Shaping Dies	29	26
Jigs and Jig Making	30	1
Jig Details	30	6
Examples of Jig Design	30	16
Locating Holes	30	26

QUESTIONS AND EXAMPLES.	*Section.*
Grinding, Parts 1 and 2	18–19
Bench, Vise, and Floor Work, Parts 1 to 4	20–23
General Hints on Shop Practice	24
Toolmaking, Parts 1 to 6	25–30

ANSWERS TO QUESTIONS AND EXAMPLES.

Toolmaking, Part 3 (numerical calculations)	27
Toolmaking, Part 4 (numerical calculations)	28

GRINDING.

(PART 1.)

INTRODUCTION.

1. Definition of Grinding.—Generally, the term "grinding" is used to designate the operation of reducing a substance to a powder by friction or trituration. It is also used to designate the act of sharpening tools. In the present section, it will be understood to mean the polishing, finishing, or sharpening of tools or metal parts (mostly hardened steel) by means of revolving wheels composed of or covered with angular grains of some abrading material that is harder than the substance to be cut.

The grinding process is characterized by the fact that the material removed is all reduced to a fine powder, and on this account the amount of power necessary to remove a given weight of material by grinding is greater than would be the case with a machine tool that produced larger chips.

2. Grinding Materials.—All grinding is done by the angular grains of some hard substance that are held in place while doing the grinding by being bedded in a softer substance, or that are so cemented or united together as to form a wheel or a rectangular mass.

Most grinding materials are used in the form of wheels, and may be divided into the two classes, *grindstones* and *grinding wheels*, the latter including all *emery*, *corundum*, and *carborundum* wheels. There is another small class that would then come under the heading of *oilstones*.

Copyright, 1901, by THE COLLIERY ENGINEER COMPANY.
Entered at Stationers' Hall, London.
All rights reserved.

GRINDSTONES AND OILSTONES.

GRINDSTONES.

3. Composition.—In the case of grindstones, the cutting material is oxide of silica SiO_2, or *quartz sand*, as it is commonly called. The individual grains, in order that they may be in proper condition for cutting, must be sharp and angular. As found in nature, the grains are bound together either by a calcareous or lime cement, or by a silicate bond. This bond must be of such nature and strength that when the grains of sand become dull, the friction will tear them from the stone and thus uncover fresh, sharp grains for the work of grinding. Grindstones are simply natural sandstones of such texture that they are suitable for grinding operations.

4. Localities Where Grindstones Are Obtained. Many of the best grindstones used in the United States come from Berea, Ohio; Huron, Michigan; or from Grindstone Island, Nova Scotia. All these localities produce several grades of stones; the Nova Scotia stones are of all grades, but most of the Berea stones are rather coarse. There are also a few foreign stones used in the United States, most of which are known as Liverpool stones. The Liverpool stones vary in quality from medium to fine.

5. Action of Water On a Grindstone.—As grindstones cut more freely when wet, they are generally used with water. The function of the water is, further, to carry off the heat resulting from the friction between the stone and the tool, and also to wash away any particles of the stone and the steel that are dislodged by the grinding, and that, if not carried away, would tend to fill up the small spaces between the grains of the grindstone, and thus glaze its surface.

Grindstones are softer when wet than when dry, and, hence, a grindstone should not be left standing with only one side in water, as this will cause the wet side to be worn

away faster than the other when the stone is again used. This is a point that should be carefully noted.

6. Grade of Stone Required for Thin Work.—For grinding such pieces as mowing-machine knives, or any other piece having sharp thin edges that the stone must cut freely in order not to heat the work and draw the temper, it is necessary that the stone be soft enough to wear away with such rapidity as to keep the cutting particles at the grindstone surface always sharp.

7. Tool Rests for Grindstones. — For general tool grinding, a rest is commonly used. A temporary or movable rest, such as a block of wood, is regarded by some mechanics as being the most desirable, because in case the tool should catch, the rest would be thrown out, and the damage to the stone or to the operator would be less than if a solid, permanent rest were used.

8. Grindstone Mountings.—In mounting the stone, it is desirable to use iron flanges, about one-third the diameter of the stone, that are so hollowed on the inside as to bear upon the stone for an inch or more near their peripheries. It is, however, quite common to mount the stone without flanges, in which case the stone has a square hole in its center, and the shaft, which is also square where it passes through this hole, is surrounded by a bushing of wood or babbitt. The accompanying illustration, Fig. 1, shows a grindstone mounted upon a frame that has a trough for water, and, also, a truing device attached to it.

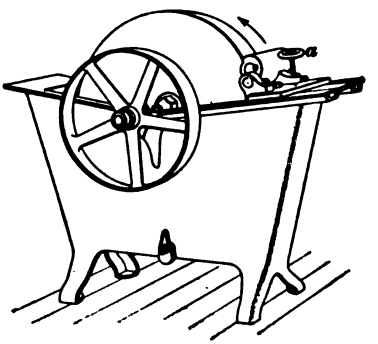

FIG. 1.

9. Automatic Truing Device. — The truing device shown on the frame in Fig. 1 works automatically, and can be applied while the grindstone is in

use, and removed when the stone has been trued. It is applied to the face of the stone that moves upwards. By turning the hand wheel *a*, the threaded roll is brought into contact with the stone and kept there until the stone is trued, the water, meanwhile, being left in the trough. When the screw threads become dull, they can be recut. Fig. 2 shows the truing device apart from the frame, *b* being the threaded roll.

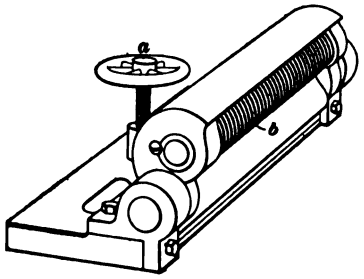

FIG. 2.

10. Truing by Hand.—All grindstones work out of true, and in the absence of an automatic truing device, the stone is sometimes trued by the use of an old file and a piece of gas pipe, or by using a piece of gas pipe alone. If the stone is badly out of true, it will be well to turn off the surface with the tang of an old file held firmly on a rest against the face of the stone, as shown in Fig. 3 (*a*). This will remove the high parts of the stone quickly, but will leave the surface quite rough. A smooth surface may then be produced by turning the face with a piece of gas pipe, the size that is commonly used being $\frac{3}{8}$-inch to $\frac{3}{4}$-inch pipe. The pipe is held on the rest but rolled across the face of

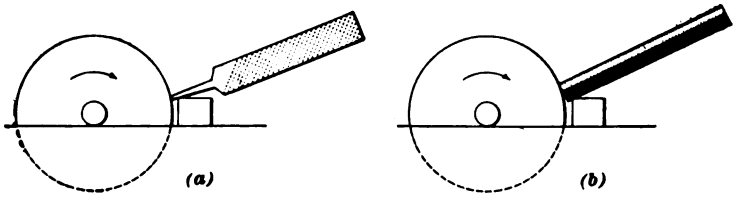

FIG. 3.

the stone, as shown at Fig. 3 (*b*). The finishing and turning on the stone is really done by the sand that is cut from the face of the stone and that lodges in the soft iron of the pipe, so that the process is actually that of stone cutting

stone. In both cases, the stone should revolve in the direction indicated by the arrow.

11. Speed Used in Grinding Tools. — For tool grinding, the grindstones are run at much less than their maximum speed. For machinists' tools, the peripheral speed should be 800 to 1,000 feet per minute; for carpenters' tools, 550 to 600 feet per minute. Another rule frequently given is to run the stone at the highest speed at which the water will not be thrown from its face by the centrifugal force. The maximum speed is limited by the safe working strength of the stone.

The following table of maximum speeds is given by some authorities, and should not be exceeded except when a very hard, strong stone is used, and then only when the stone is well mounted with strong flanges, and is so located that damage from bursting would not be likely to be very great. The number of revolutions given correspond to a periphery speed of nearly 3,400 feet per minute.

TABLE I.

TABLE OF MAXIMUM SPEEDS.

Diameter of Stone.	Revolutions per Minute.
8 feet	135
7 feet 6 inches	144
7 feet	154
6 feet 6 inches	166
6 feet	180
5 feet 6 inches	196
5 feet	216
4 feet 6 inches	240
4 feet	270
3 feet 6 inches	308
3 feet	396

12. Artificial Grindstones.—A few artificial grindstones have been made that have the advantage of being more uniform in texture than natural stones. At the present time, most of the artificial grinding disks are made of emery or corundum, and are generally known as *emery wheels*. They have largely taken the place of sandstones for grinding, except in some special lines of grinding, particularly where even a little heat injures the work, as in the grinding of glass lenses.

OILSTONES.

13. Composition.—Natural oilstones, like grindstones, are composed of quartz sand SiO_2, but the grains are finer and are bound together in a different manner. The cementing material or bond in oilstones is generally silica, and is more in the nature of a glass or vitreous bond than is the case with grindstones. In fact, most oilstone deposits are so seamed with thin veins of quartz that it is impossible to get any large stones or slabs, which is the principal reason why grinding wheels are not made of this material.

The oilstone is of such a nature that the particles worn from the stone are best removed by oil and the stone cuts best when supplied with oil. Generally speaking, sperm oil is the best grade to be used on oilstones, though a good grade of machine oil can also be used.

14. Kinds and Qualities.—The classes of oilstones on the markets in the United States may be generally divided into Arkansas stones and Washita stones. The Arkansas stones are very fine-grained and appear like white marble. They are used for sharpening the finer grade of instruments and produce remarkably keen, fine edges. The Washita stones are much coarser in grain, with the color sometimes white, but frequently having a yellow or red tinge. The Washita stone is coarser than the Arkansas and cuts more rapidly, but with greater delicacy than would ordinarily be expected from one having so coarse a grain.

The Washita stones are, as a rule, better for sharpening wood-working tools than the Arkansas stones, while the Arkansas stones are used more frequently in the machine shop. The Washita stones can be obtained in larger pieces than the Arkansas stones and are less expensive.

15. Artificial Oilstones. — Artificial oilstones are now on the market. They possess several advantages over the natural stones. Those sold under the name of *Indian oilstone* are composed of a peculiar grade of Indian corundum, and, hence, have very good cutting qualities. One special advantage is that some stones are manufactured having one coarse face and one medium face, i. e., one half of the stone is of one grade and the other half of another grade, thus giving the advantage of two stones with only one piece to look after. Then, too, the artificial stones can be made in special forms, such as slips, cones, etc., easier than natural stones. The artificial oilstones are also made in any size, and, as a consequence, the larger sizes are not extremely expensive, as is the case with the natural stones. The artificial oilstones are also made in the form of wheels similar to emery wheels, and either in the form of wheels or flat slips, they can be used with oil or water as a lubricant. At present they are manufactured in three grades: fine, medium, and coarse. The fine grade is approximately equivalent to the Arkansas stones, the medium grade to the Washita stones, and the coarse grade cuts freer and faster than either of the above.

GRINDING WHEELS.

ABRASIVE MATERIALS.

CORUNDUM.

16. Composition and Where Found.—Corundum is pure alumina, or oxide of aluminum. It is crystalline in structure, and has a hardness of 9, in this respect ranking, among natural minerals, next to the diamond.

NOTE.—In order to provide a convenient means of comparing the hardness of minerals, a comparative scale has been adopted in which 10 minerals are taken to represent 10 degrees of hardness, and all other minerals are compared with the members of this scale. The scale is as follows:

1. Talc.	6. Feldspar.
2. Gypsum.	7. Quartz.
3. Calcite.	8. Topaz.
4. Fluorite.	9. Corundum or Sapphire.
5. Barite.	10. Diamond.

The gem sapphire is sometimes used in the scale in place of corundum, but sapphire is only the gem form of crystallized corundum. Talc is the softest of the minerals of the scale and can easily be scratched with the finger nail, while diamond is the hardest substance known.

It is found in considerable quantities in Georgia and North Carolina, also in Canada; while small quantities have been exported from India. In Georgia and North Carolina, it occurs in masses in veins of rock, and also in beds in the granular form known as *sand corundum*. In the latter case it is mixed with clay and other impurities. In Canada, it is found quite uniformly distributed through large masses of rock that, when crushed, yields 10 per cent. to 20 per cent. of corundum crystals.

Good commercial corundum shows by analysis from 40 per cent. to 80 per cent. or even 90 per cent. of the thoroughly crystallized aluminum oxide Al_2O_3; from 5 per cent. to 25 per cent. of aluminum silicate and imperfectly crystallized aluminum oxide; from 2 per cent. to 6 per cent. of iron oxide; about the same amount of free silica; and from $1\frac{1}{2}$ per cent. to 3 per cent. of water or other substances that are driven off at red heat.

17. Properties.—When corundum occurs in masses, it is either picked up on the surface of the mountain in boulders of various sizes, or it is uncovered by blasting away the rock. The mineral thus obtained is passed through crushers and then through rolls until it is reduced to grains of suitable size for making wheels, or for other abrasive purposes. Afterwards it is frequently treated by an abrading and washing process that removes the impurities from the grains or kernels of corundum. It is then

dried and graded by being passed over sieves of suitable mesh to give the sizes desired. These sizes range from Nos. 12 or 20 to 200.

18. Grading, and Meaning of Numbers Used.—The numbers by which the grain of corundum is designated is determined as follows: A No. 20 sieve, for example, is one that has 20 meshes to a lineal inch, and No. 20 emery is, theoretically, composed of kernels that will just pass through the meshes of a No. 20 sieve. Practically, the kernels of No. 20 are not all of a size, but are such sizes that the largest will just pass through a No. 20 mesh, and the smallest will not pass through the next smaller-sized mesh, which may be that of a No. 22 or 24 sieve, according as the grading is more or less close as to size. The numbers principally used for making abrasive wheels are from 20 to 80 or 100. The finer numbers are used for polishing.

EMERY.

19. Composition and Where Found.—Emery consists of corundum in combination with the protoxide of iron. The presence of the iron gives the mineral a dark color, and also makes the grains a little tougher and less brittle than the grains of pure corundum. In hardness, emery is generally rated about 1 degree lower than corundum.

The principal sources of commercial emery in the United States are the extensive emery mines at Chester, Massachusetts, and at Peekskill, New York; and in foreign countries, the island of Naxos, belonging to Greece, and the emery mines of Turkey, located near Smyrna. Good commercial emery has from 40 per cent. to 60 per cent. of solid grains, the remaining 60 per cent. to 40 per cent. being aluminum silicate, iron oxide, silica, water, etc. in proportions that vary with the kind of emery.

20. Preparation.—Emery is mined, crushed, cleaned, and graded in about the same manner as corundum, and is sold in the market as Chester emery, Naxos emery, and Turkish emery. It varies considerably in its degree of purity, there being a difference in the quality of the ore from different mines, and even from different parts of the same mine. The process of manufacture, and the skill and thoroughness with which the ore is treated for the removal of impurities, also have much to do with its degree of purity.

ARTIFICIAL ABRASIVES.

21. Carborundum. — The electric furnace develops such a high temperature that it offers opportunity for experiments to determine whether some artificial product may be produced that will take the place of emery and corundum for purposes of grinding. In 1893, Mr. E. G. Acheson produced in an electric furnace a substance that he named **carborundum,** which is the only artificial abrasive that has thus far been extensively used. It is manufactured in quite large quantities by The Carborundum Company at Niagara Falls. Abrasive wheels are made of this material by The Carborundum Company, but it is sold in the market for various purposes, though not for the manufacture of wheels.

Carborundum is carbide of silicon SiC, and is made by surrounding a small core or cylinder of pure carbon with a mass of coke and sand to which a little salt and sawdust is added. A powerful electric current is then passed through the carbon core, which, by its resistance to the current, becomes heated to a high temperature, and this temperature is communicated to the coke and sand surrounding it. At the high temperature thus obtained, the carbon and silicon unite and crystallize, and when the furnace is cooled and the core uncovered, it is found to be surrounded by a ring of brilliantly colored crystals of carborundum.

MANUFACTURE AND USE OF EMERY WHEELS.

22. Use of Term Emery Wheel.—In speaking of abrasive wheels, the common term "emery wheel" will include also corundum and carborundum wheels, except where some special quality requires particular mention of the cutting material of the wheel.

23. Parts of Emery Wheel.—An emery wheel consists of two essential parts; viz., the *emery*, or cutting material, and the *bond*, or matrix. The sharp points, or corners, of the grains of emery in the wheel constitute an indefinite number of cutting points or edges.

24. Bonds for Emery Wheels.—In order that these sharp and hard points may be effective in cutting away the material presented to them, the grains must be firmly held, just as a diamond point used for cutting glass must have a suitable setting. The bond, or matrix, of the wheel furnishes this setting for the grains of emery. It must be strong enough to form a wheel that will resist the centrifugal force due to the high speeds at which the wheels must be run to secure their greatest efficiency, and, also, must be hard enough not to wear away too rapidly and let the grains of emery loose before they have done their work. On the other hand, the bond must not be too hard, or it will not give way when the projecting corners of the grains of emery have been reduced by contact with the work, and the wheel will acquire a hard, smooth surface, with no cutting properties. The character and quality of the bond are, therefore, of great importance in the manufacture of emery wheels.

CLASSIFICATION OF EMERY WHEELS.

25. General Consideration.—Emery wheels may be classified with reference to the material used for bond, the principal varieties being as follows: (*a*) Wheels with a vitrified bond, known as *vitrified wheels;* (*b*) wheels with a

silicate-of-soda bond, known as *silicate wheels;* (*c*) wheels with a shellac bond, known as *gum* or *elastic wheels;* (*d*) wheels with a rubber bond, known as *vulcanite wheels;* (*e*) wheels with a celluloid bond, known as *celluloid wheels;* (*f*) wheels with a preparation of leather bond, known as *tanite wheels.*

26. Vitrified Wheels. — The material used for the bond in vitrified wheels is a mixture of certain clays and fluxes. When these clays have been thoroughly mixed with the emery in the proper proportions, usually by means of water, the mass is dried sufficiently to allow of its being formed into a wheel. This wheel is then put upon a fire-brick disk and placed in a kiln where the temperature is raised until the clay and fluxes begin to melt (probably about 3,000° F.), so that the whole wheel becomes one homogeneous mass. It is then allowed to cool, the bond becoming essentially the nature of glass. This vitrified bond, thickly studded with grains of emery, is a vitrified emery wheel. The *Norton*, the *abrasive*, the *sterling*, the *Grant*, and the *safety* are examples of vitrified wheels.

27. Silicate Wheels.—When silicate of soda is used as a bond, this material, after being prepared and mixed with the emery, is tamped into a mold, and the bond hardened by drying in an oven at a moderately low temperature, say 325° to 400° F. The *Detroit* and the *Scranton* are examples of silicate wheels, though similar wheels are made by several other companies.

28. Shellac Wheels. — Shellac wheels are made by mixing the emery with a preparation of shellac, forming the wheels in molds, and hardening them by heat at a low temperature, say from 300° to 400° F.

29. Vulcanite Wheels.—In the manufacture of vulcanite wheels, the preparation of rubber that forms the bond is filled with emery and the mass made homogeneous by being repeatedly passed between rolls. In the case of thick wheels, several sheets, or layers, from the rolls may be used

to form a single wheel. The wheel is then subjected to hydraulic pressure and afterwards placed in a vulcanizer, where it is exposed for some time to a degree of temperature sufficient to harden the bond. When the wheel is used, the heat generated melts away the bond fast enough to loosen and drop out the kernels of emery as fast as they become dull, thus keeping the wheel sharp.

30. Celluloid wheels are made by but one company. They are strong and can, therefore, be run at high speeds. Also, very thin wheels of this type may be used with safety.

31. Tanite Wheels.—Tanite is a substance that was invented and first used for the manufacture of buttons, combs, and fancy articles. When it was found to be a suitable bond for an emery wheel, the Tanite Company became known as the manufacturer of tanite emery wheels. Tanite is hard and strong at low temperatures, but soft and plastic at high temperatures. Hence, a tanite wheel has somewhat of the qualities of a vulcanite wheel; that is, when the wheel is used the heat softens the bond at its surface and releases the dull kernels of emery.

PREPARATION OF EMERY WHEELS.

32. Bushing Emery Wheels. — In ordering emery wheels, one of the dimensions that should be given is the diameter of the spindle on which the wheel is to run. The wheel is, therefore, made with a hole in the center somewhat larger than the largest spindle that is used to carry a wheel of its size, and when an order is received, the wheel is "bushed" to the size of spindle for which it is ordered.

The bushing is usually of lead. The wheel is placed in a horizontal chuck with a bushing spindle of the required size at the center of the chuck, and melted lead poured into the annular space between the bushing spindle and the wheel. As the emery wheel when sent out must have a perfectly cylindrical surface, it is necessary in ordinary methods of truing that the bushing be done before truing the periphery of the wheel.

33. Truing Emery Wheels.—Purchasers of emery wheels generally demand that the wheels be not only round, but of uniform thickness. In most processes of making wheels, the shape of a wheel changes slightly when the bond hardens. Sometimes the wheel warps, but it always shrinks an uncertain amount. It is therefore necessary that the wheels be trued both on their faces, to make them of uniform and correct thickness, and on their peripheries, to make them true cylinders. Inasmuch as the wheel is made to cut other substances, rather than to be itself rapidly reduced in size, the truing is one of the most difficult and expensive processes involved in its manufacture.

There are two principal methods used in truing. One is to cut away the material of the wheel by means of some harder substance than the wheel itself, as the diamond. This method is expensive, and is impracticable for large and coarse wheels. The other method is to use a dressing tool made of steel or chilled-iron disks, either flat or conical, that are free to revolve on a central spindle. This tool is pressed against the revolving wheel, and as the disks of this dressing tool revolve in rolling contact with the emery wheel, the kernels of emery are dislodged, the action of the disks of the tool being somewhat like that of a quick, sharp blow.

The action of the disk dressing tools upon an emery wheel is similar to that of the stone cutter's point tool, or chisel, used in dressing stone; and just as a chisel, or point tool, can be made to cut stone much harder than itself, so the dressing tool can be made to break the projecting kernels out of the rapidly revolving emery wheel, thus giving the wheel an even surface.

34. The truing tool may be used as part of an automatic machine, or it may be used as a hand tool. The manufacturer, in preparing wheels for the market, frequently uses the automatic machine. The user of emery wheels should have a hand dresser, to true the wheels whenever they wear a little out of round. Fig. 4 illustrates three different kinds of hand tools for truing and dressing the

peripheries of wheels, all of which are similar in their action. They are composed of a handle *a*, carrying a number of

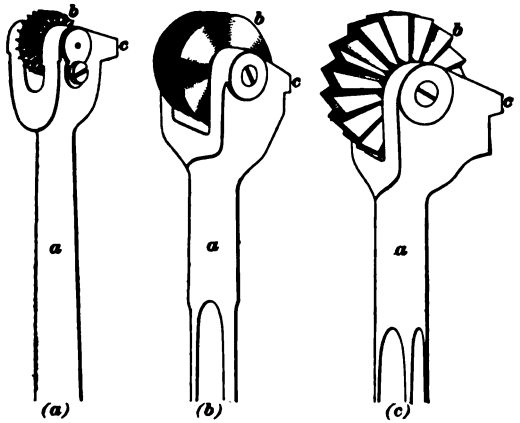

FIG. 4.

hardened disks *b*, which may be brought into contact with the surface of the emery wheel. The projection *c* serves as a support for the tool when in use.

GRADING EMERY WHEELS.

35. Emery wheels are graded by a process in which the hardness of the wheel relative to some arbitrary standard is determined. The manufacturer grades each wheel as closely as possible, and publishes in his catalogue an explanation of his system of grading. The buyer, in ordering, must either know the grade of wheel that will do his special work, or he must describe the work and allow the manufacturer or dealer to select it for him. On many kinds of work, a slight variation from the correct grade will cause the wheel to give poor results; the very best wheel for one kind of work may be useless for another kind or quality of metal. The user of emery wheels should, therefore, exercise much judgment in the selection of wheels in order that they may be adapted for the purposes for which they are to be used.

TABLE II.

TABLE FOR SELECTION OF GRADES.

Class of Work.	Number of Emery or Degree of Coarseness Usually Furnished.	Grade Letters or Degrees of Hardness Usually Furnished.	Grade Letters or Degrees of Hardness Furnished in Exceptional Cases, Sometimes SOFT AS	Sometimes HARD AS
Large cast-iron and steel castings	16 to 20	P to Q	O	U
Small cast-iron and steel castings	20 to 36	O to P		Q
Large malleable-iron castings	16 to 20	Q to R	P	W
Small malleable-iron castings	20 to 30	P to Q	O	U
Chilled-iron castings	16 to 20	R to T	Q	U
Wrought iron	16 to 30	P to Q	O	R
Brass and bronze castings	20 to 30	O to P		R
Rough work in general	16 to 30	P to Q	O	R
General machine-shop use	30 to 46	O to P		
Lathe and planer tools	30 to 46	N to O	M	P
Small tools	46 to 100	N to P		
Wood-working tools	36 to 60	M to N	L	O
Twist drills (hand-grinding)	36 to 60	M to N		
Twist drills (special machines)	46 to 60	G to J		
Reamers, taps, milling cutters, etc. (hand-grinding)	46 to 100	N to P		
Reamers, taps, milling cutters, etc. (special machines)	46 to 60	H to K		
Edging and jointing agricultural implements	20 to 30	Q to R		W
Grinding plow points	20 to 30	P to Q		U
Surfacing plow bodies	20 to 30	N to O	M	P
Stove mounting	20 to 36	P to Q		
Finishing edges of stoves	30 to 46	O to P		
Drop forgings	20 to 30	P to Q		
Gumming and sharpening saws	36 to 60	M to N	L	O
Planing-mill and paper-cutting knives	30 to 46	J to K	I	M
Car-wheel grinding	20 to 30	O to P	N	R

36. Makers of vitrified wheels use as a system of designating grades, the letters of the alphabet, the first letters indicating the softer wheels. To give an idea of the relations of the grades to the work to which each grade is adapted, Table II, published by The Norton Emery Wheel Company, is given. This table agrees quite closely with the system of grading that is used by most of the makers of vitrified wheels.

37. Testing Emery Wheels.—Emery wheels sometimes break or burst while running, which accident, in the case of a large wheel, is liable to do considerable damage, besides endangering the life of the workman using it. In most cases where a wheel breaks when running, a careful examination of the conditions reveals some adequate cause other than the inherent weakness of the wheel. To be sure that the wheel is sound and strong when it leaves the factory, the manufacturer should test it by running it for a short time at a higher rate of speed than will be required when the wheel is in actual use.

38. The machine used for such testing must have a cover for the wheel that will arrest the pieces if the wheel should break. The centrifugal force acting to break a wheel is proportional to the square of the number of revolutions made by the wheel; therefore, if the speed is doubled, the centrifugal force is quadrupled. It is customary, in testing wheels for strength, to run them at nearly double their working speed, such a test being almost sure to break a wheel if it is not free from cracks or other defects.

39. The following table shows the number of revolutions per minute for specified rates of periphery speed, also the stresses per square inch on vitrified wheels at the specified rates of speed. The usual working surface speed is from 5,000 to 6,000 feet per minute; the number of revolutions corresponding to these surface speeds are given in the table.

TABLE III.

SPEEDS OF GRINDING WHEELS.

Diameter. Inches.	Surface Speed of 1,000 Feet.	Surface Speed of 2,000 Feet.	Surface Speed of 3,000 Feet.	Surface Speed of 4,000 Feet.	Surface Speed of 5,000 Feet.	Surface Speed of 6,000 Feet.	Surface Speed of 7,000 Feet.	Surface Speed of 8,000 Feet.	Surface Speed of 9,000 Feet.	Surface Speed of 10,000 Feet.
	Stress per Square Inch, 3 lb.	Stress per Square Inch, 12 lb.	Stress per Square Inch, 27 lb.	Stress per Square Inch, 48 lb.	Stress per Square Inch, 75 lb.	Stress per Square Inch, 108 lb.	Stress per Square Inch, 147 lb.	Stress per Square Inch, 192 lb.	Stress per Square Inch, 243 lb.	Stress per Square Inch, 300 lb.
	Revolutions per Minute.	Revolutions per Minute.	Revolutions per Minute.	Revolutions per Minute.	Revolutions per Minute.	Revolutions per Minute.	Revolutions per Minute.	Revolutions per Minute.	Revolutions per Minute.	Revolutions per Minute.
1	3,819.71	7,639.42	11,459.13	15,278.83	19,098.54	22,918.25	26,737.97	30,557.68	34,377.39	38,197.10
2	1,909.85	3,819.71	5,729.56	7,639.41	9,549.27	11,459.12	13,368.98	15,278.84	17,188.69	19,098.55
3	1,273.24	2,546.47	3,819.71	5,092.94	6,366.18	7,639.41	8,912.66	10,185.89	11,459.13	12,732.36
4	954.93	1,909.85	2,864.78	3,819.70	4,774.63	5,729.56	6,684.49	7,639.42	8,594.34	9,549.27
5	763.94	1,527.88	2,291.83	3,055.76	3,819.70	4,583.65	5,347.59	6,111.54	6,875.48	7,639.42
6	636.62	1,273.23	1,909.85	2,546.47	3,183.09	3,819.70	4,456.32	5,092.94	5,729.56	6,366.18
7	545.67	1,091.35	1,637.02	2,182.69	2,728.36	3,274.03	3,819.71	4,365.38	4,911.05	5,456.73
8	477.46	954.93	1,432.39	1,909.85	2,387.31	2,864.78	3,342.24	3,819.71	4,297.17	4,774.63
10	381.97	763.94	1,145.91	1,527.88	1,909.85	2,291.83	2,673.79	3,055.77	3,437.74	3,819.71
12	318.31	636.62	954.93	1,273.23	1,591.54	1,909.85	2,228.17	2,546.47	2,864.78	3,183.09
14	272.84	545.67	818.51	1,091.34	1,364.18	1,637.02	1,909.85	2,182.69	2 455.53	2,728.36
16	238.73	477.46	716.19	954.92	1,193.66	1,432.39	1,671.12	1,909.85	2,148.58	2,387.32
18	212.21	424.41	636.62	848.82	1,061.03	1,273.24	1,485.44	1,697.65	1,909.85	2,122.06
20	190.99	381.97	572.95	763.94	954.92	1,145.91	1,336.90	1,527.88	1,718.87	1,909.85
22	173.62	347.24	520.87	694.49	868.11	1,041.74	1,215.36	1,388.98	1,562.61	1,736.23
24	159.15	318.31	477.46	636.61	795.77	954.93	1,114.08	1,273.23	1,432.39	1,591.55
30	127.32	254.65	381.97	509.29	636.61	763.94	891.26	1,018.59	1,145.91	1,273.23
36	106.10	212.21	318.31	424.42	530.51	636.62	742.72	848.82	954.93	1,061.03

GRINDING.

40. Applications of Grinding. — Emery wheels are used for grinding all kinds of metals; also glass, porcelain, rubber, wood, and leather, including the dressing of kid skins that are used for making gloves. They are made in a great variety of sizes that range from the small wheel used by the dentist and weighing a fraction of an ounce, to wheels 3½ feet or more in diameter and weighing 1,000 pounds. They are also made in a variety of shapes for special machines and work. Iron and steel castings, chilled rolls, hollow ware, stove fittings, plow points, car wheels, armor plate, tools for cutting metals and wood, and such special tools as cutters, reamers, saws, etc.; also spheres and cylinders for roller bearings, and the interior surfaces of cylinders that must be accurately formed, such as the "Triple" cylinders for the Westinghouse air brake, are all ground with emery wheels.

The grinding machine is used successfully on the finest work and also on the coarsest. A fine wheel will remove .00001 of an inch of material from a cylinder, while a coarse wheel will grind inequalities from the rough casting with surprising rapidity and apparent ease. Many persons having seen the rapidity with which a large coarse emery wheel will remove irregularities from a casting have attempted to substitute emery wheels for the lathe tool for roughing out work, but as yet this method has not been a success, as it always takes more power, and up to the present time has cost more to reduce metal to dust than to chips. By the use of very large, heavy, automatic machines using large and heavy wheels, it may be possible to reduce the labor and wheel costs so low that it will enable the grinding machine to remove large amounts of stock, not only faster, but cheaper than it can be done in the lathe.

41. Object.—The processes of modern grinding may be said to have three principal objects; viz.: *First*, the removal, or cutting away, of stock from the piece to be ground. *Second*, the bringing of pieces to exact specified

dimensions. *Third*, the production of a satisfactory finish upon the surfaces ground.

42. Possibilities. — The latest improved automatic grinding machines are demonstrating that large wheels driven on rigid machines and with sufficient power will, in many cases of cylindrical grinding, remove a considerable amount of stock cheaper than it can be removed in a lathe. Grinding machines are, therefore, likely to come into more general use, because they can successfully compete with the lathe where accurate work and smooth finish are required. Indeed, the field for grinding by automatic machines has recently been greatly enlarged by improving the design of the machine and using larger wheels.

POLISHING AND BUFFING.

POLISHING.

43. Object.—Polishing differs from grinding in that it is not done to remove material or change the size and shape of the work, but simply to create a bright or smooth surface.

44. Polishing Wheels and Belts.—Polishing wheels are usually made by covering the periphery of wooden wheels with leather and gluing to this leather a coating of emery. This is done by coating the leather with hot glue, and before the glue becomes dry rolling the wheel in loose emery until the emery ceases to adhere to it. When used, such wheels are trued, in a sense, by holding an oilstone or other hard substance against them while they are being run. This levels the rough or projecting places.

Flat and curved surfaces are polished on the periphery of wheels and more irregular objects are polished by holding and turning them against leather belts covered with emery and running over pulleys, these belts being wide or narrow, tight or loose, according to the shape of the work.

When polishing, the work is held in the hand and moved in such a manner that the desired finish is produced. Much practice is required to polish fine work, as it is a matter of skill and touch on the part of the workmen.

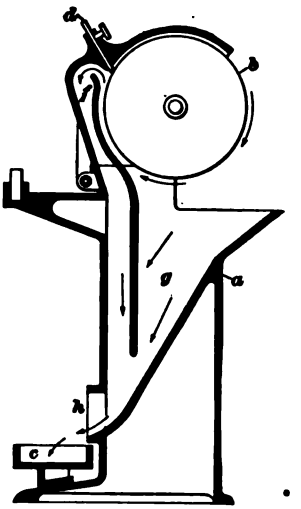

FIG. 5.

45. Enclosed Polishing Wheel. — Polishing-wheel machines are usually of a primitive nature. Sometimes they are composed simply of two uprights in which are held wooden plugs having holes in their ends that receive the points of the polishing spindle. There are, however, a few modern machines for polishing, one of which is illustrated in Fig. 5.

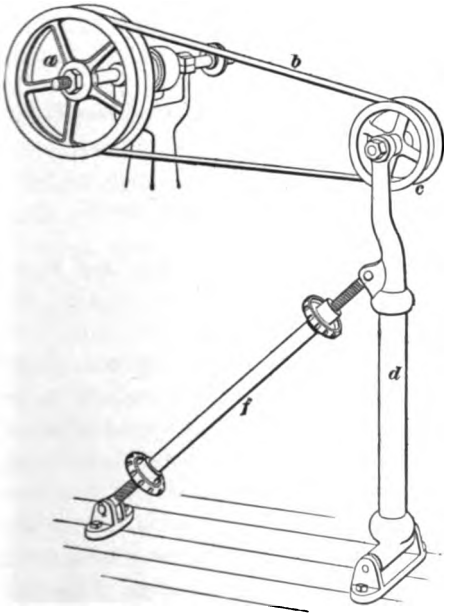

FIG. 6.

The interior of the base *a* is so formed that the air-current caused by the rotation of the wheel when running will remove all dust caused in polishing and deposit it on the floor behind the machine or in the water tank *c*. The wheel *b* rotates in the direction indicated by the arrow. At the back a shield *d* is so arranged that it can be adjusted to almost touch the face of the wheel. This shield stops the current of

air rotating with the wheel and turns one current downwards through the passage *f*, while another current passes downwards through the passage *g*, but both air-currents are discharged at the back of the machine through the opening *h*. This machine was devised to polish small work. The wheels used in it are covered with leather and coated with emery.

46. Belt Polishing Machine.—Fig. 6 illustrates one form of mount for a polishing belt. In this case, a pulley *a* has been mounted on one end of an ordinary buffing-wheel or grinding-wheel arbor. The belt *b* passes over this pulley and the outer end is carried on the pulley *c*, which is supported upon a swinging arm *d* that is controlled by a brace *f*. By means of the brace *f*, the tension on the belt *b* may be regulated. This belt is coated with glue and emery, or any other suitable polishing material.

BUFFING.

47. Distinction Between Polishing and Buffing. Sometimes buffing and polishing are considered one and the same thing, but it is well to make a distinction between them at the point where the finish becomes grainless.

48. Buffing Wheels.—The buffed or grainless finish is obtained by means of soft wheels. These wheels are sometimes made of felt covered with emery, but usually they are formed of layers of cotton cloth that are cut into round blanks about 12 inches in diameter, which have a hole in the center. These round blanks are piled one above the other until there are enough to form a wheel from 2 to 4 inches thick. These are then placed on the arbor of the machine and bound together at the center by collars and a nut. The larger these collars are, the harder will be the wheel when running; the smaller the collars, the softer will be the wheel when running.

It should be understood that when this wheel that consists of layers of cotton cloth is in place on the arbor of the machine, the edges of the cloth are presented to the work, or form the periphery of the wheel. In use, this wheel is revolved (if 12 inches in diameter) from 4,000 to 6,000 revolutions per minute, according to the practice of the operator who may be using it.

49. The object of using cloth in this manner is to give a yielding wheel into the periphery of which the operator can press the work, which usually is irregular. In this way the cloth is made to rub every corner and curve of the work and the lines of its motion are in all directions, thereby not only polishing all corners and curves, but also giving a grainless surface.

50. Cutting or Polishing Material Used in Buffing.—The cutting or polishing material is used in the form of a cake that is made by compressing tallow, or other heavy grease, together with emery, crocus, flour emery, rouge, and any other material that may be in vogue with the particular operator, some using one kind and some another; the coarser material is used for roughing and the finer material for finishing and "coloring," as it is known in the workshop. This material is applied to the wheel by holding it firmly against the edges of the cloth, as the wheel revolves, until the edges become saturated; it is also applied from time to time as the operator wishes to change the cutting quality of the wheel.

51. Applications of Buffing. — Buffing is used for plated ware and for the peculiar surface that is common on bright vases, culinary articles, and lacquered surfaces. Much buffing is done by first cutting down with a rough material on the wheel, then finishing ready for plating. In the workshop this finishing operation is called *coloring*. In some of the finer grades of work, this is accomplished by holding it against a very soft cotton-cloth wheel that has no cutting material upon it. If the pressure and speed are

suited to the substance of which the article is made, a very bright surface will be produced.

It is a well-known fact that with plated ware the perfection of the surface after plating will never be greater than the surface on which the plating is deposited. After the article is plated, it is again taken to the soft buffing wheels and colored, which removes all stains from the plating bath and gives that peculiar luster that the operator calls "color."

Some work is first polished and then buffed, but in such cases the material is usually hard, such as steel, while brass and softer metals are not so treated.

52. Buffing-Wheel Mount.—Fig. 7 illustrates a light buffing-wheel mount that may also be used for small emery wheels. A rag wheel is shown on the left-hand spindle at *a*. In the style shown, the wheel is mounted on a bench stand. Similar wheels are built that are mounted on posts that stand on the floor. The machine is driven by a belt that runs on the pulley *b*, and has provision for a second wheel at *c*.

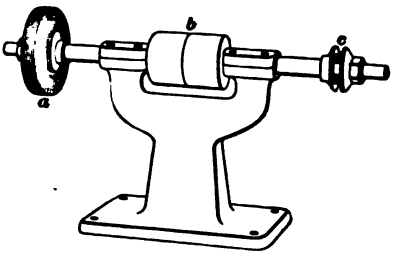

FIG. 7.

53. Brush Wheels. — For polishing purposes, wheels are frequently made that are surrounded by bristle brushes, or brushes made of other materials. In using these wheels, the material is applied to the brush either in the form of a wash or a wax, as in the case of buffing wheels or rag wheels. Brush wheels are more expensive than rag wheels and are not extensively used in machine shops.

54. Leather Wheels.—Wheels for polishing purposes are frequently cut from leather. For very small wheels, disks may be cut from thick saddle skirting, while when larger disks are required they are cut from walrus hide,

which can be obtained an inch or more in thickness and makes an excellent polishing wheel. The polishing material is usually mixed with oil or water, oil being preferred.

SELECTION OF GRINDING WHEELS.

55. General Remarks. — When selecting grinding wheels, it is well to understand that the smoothness of the surface required on the work depends on other conditions as well as the size of grains of which the wheel is composed. A fine-grained wheel does not produce a fine surface simply because the wheel is fine. In fact, it may produce a very coarse surface, and a coarse-grained wheel may produce a fine surface, when of the right grade and used at a speed best adapting it to the material being ground.

56. Grading of Grinding Wheels. — Emery and corundum wheels are made in different grades of hardness, and according to the standards of the Norton Emery Wheel Company, the grade of vitrified wheels is denoted by letters, A being the softest. The grades most commonly used are J, K, L, M, N, O, P, and Q. The grades of elastic or gum wheels are denoted by numbers, which range from 0 to 6, each number being $\frac{1}{4}$ larger than the preceding one; viz., 0, $\frac{1}{4}$, $\frac{1}{2}$, $\frac{3}{4}$, 1, etc. Numbers 1 to 5 are those most commonly used.

Other companies have other systems of grading. Some grade their wheels from A to Z, A being extremely soft and Z extremely hard. The Carborundum Company grade their wheels from D to V, D being hard and V being very soft.

57. Relation Between Grade of Wheel and Work. — Hard-grade wheels retain their particles longer than softer ones; therefore, the softer grades are said to *cut sharp*, because the particles are torn out by the act of grinding before they become dull, and thus new ones are constantly being exposed to the work. Some kinds of work

require that these particles shall be torn out before they become at all dull, while other kinds of work require that they shall be retained until they become quite dull and smooth. Between these extremes, there is a great variety of work that requires a variety of grades of wheels.

Different materials and different shapes of work require different sizes of grain combined with different bonds and grades of hardness. In general, the harder that the material to be ground is, the softer must the wheel be, and the coarser may it be. With steel, the hardness of the wheel varies inversely with the softness of the material that is to be ground. Brass, copper, and rubber require soft wheels, and rubber very coarse ones. Hardened steel, cast iron, and chilled iron require soft wheels in order that the particles of emery and corundum may be broken out as they become dull and thus constantly present new ones to the work. Brass, copper, and rubber require soft wheels in order that the material being ground may not adhere to the wheel, but that the particles of emery may be torn out before the brass or copper can adhere. Soft steel requires a harder wheel than hardened steel, because the particles of emery are not dulled so soon and, entering deeper into the work, are torn out more readily. Hardened steel, cast iron, and chilled iron require soft wheels because these materials dull the particles of emery and corundum very quickly, making it necessary to throw them away rapidly.

58. Glazing.—When grinding hardened steel with a wheel that is too hard, the wheel will be worn bright and smooth and will cut but little. This is known as *glazing*. When soft steel is ground with a wheel that is too hard for the work, the wheel will fill with steel; for, since the particles remain sharp and enter deep into the soft steel, they cause the steel to adhere to them, especially if there is considerable pressure on the wheel. Fine-grained wheels when hard fill and glaze sooner than coarse ones of the same grade; and, when soft, wear away faster than coarse ones of the same grade when cutting the same depth.

HAND GRINDING.

59. General Consideration. — The term **hand grinding** is generally understood to cover those operations in which the work is held by hand, pressed against the emery wheel, and moved about either with or without the aid of a rest. There is a class of machines in which the work is large and stands still, while the emery wheel, which is mounted in a swinging frame, is moved about so as to grind the surface of the work.

60. Simple Hand Grinding Machine.—The grinding machine used in foundries for smoothing castings, and which is illustrated in Fig. 8, is perhaps the most common type of a hand grinding machine. These machines are made in a great variety of sizes, carrying wheels from 3 inches to 36 inches in diameter. The style shown is provided with

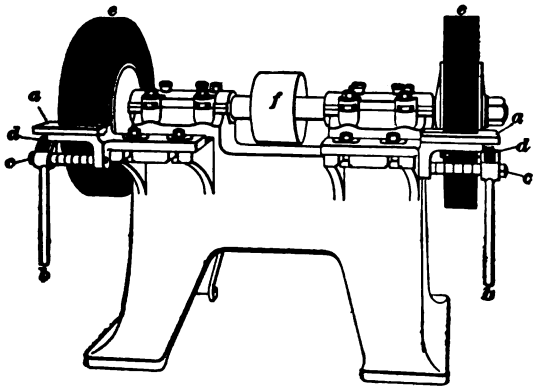

FIG. 8.

rests *a* upon which the work may be placed while it is being ground. For truing emery wheels, truing devices are permanently attached to the machine and shown below the rests, *c* being the axis on which the device works, *d* the truing wheel, and *b* the handle by means of which it is controlled. Whenever the wheel gets out of true, the truing device can be brought into contact with the face of the

wheel and moved across the face on the axis *c*, thus quickly truing the surface of the wheel *e*. The wheels *e* are driven by means of a belt on the pulley *f*.

In some cases, similar machines are used where considerable skill is required to produce the work, but as a rule this type is used only for comparatively rough work.

HAND SURFACING MACHINES.

MACHINES EMPLOYING EMERY WHEELS.

61. Table Machine. — The machine illustrated in Fig. 8 is intended for rough work. Where approximately flat surfaces are required without special regard being paid to the angles between the faces, a machine of the class illustrated in Fig. 9 may be employed. The illustration shows one bearing and one emery wheel of a machine provided with a surfacing table. The emery wheel *a* is mounted on a shaft *b* driven by a belt on the pulley *d*, one bearing for the shaft being carried by the bracket *c*. Above the emery wheel is mounted a table *e* through which the upper face of the wheel projects. As shown in the illustration, the table is provided with an adjustable fence *f* for guiding the work on the surface. The table *e* can be adjusted by means of the screw shown at the front of the table, to make allowance for wear in the emery wheel or to adjust the depth of cut taken. This machine will produce approximate flat surfaces and is very useful for removing

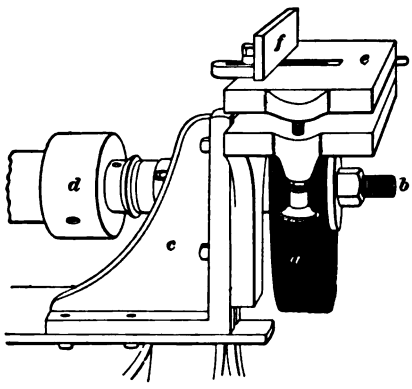

FIG. 9.

rough parts from flat surfaces, but is not especially adapted for producing correct angles. The machine is limited to work of such a size that can be easily handled and placed upon the table.

62. Swinging-Frame Machine.—Where large work is to be ground or polished, as, for instance, portions of engine-frame castings and cylinders, and similar work that frequently requires finishing, and where the work is of such great size that it would be impossible to take it to the emery wheel, a machine of the class illustrated in Fig. 10

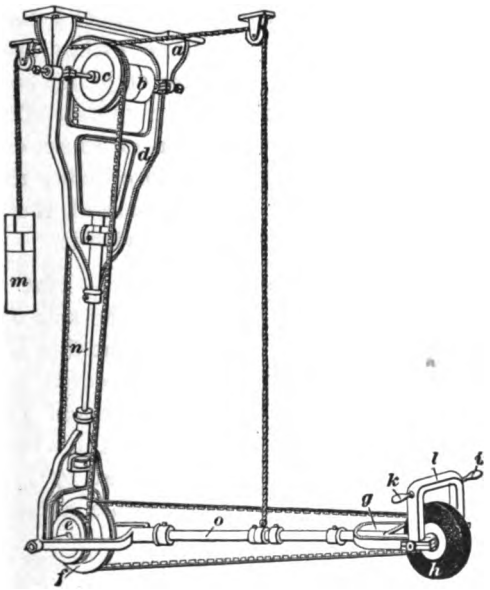

FIG. 10.

may be employed. This machine consists of a bracket *a* fastened to the ceiling that carries the countershaft on which are placed tight and loose pulleys *b* and the pulleys *c*. This countershaft is driven by a belt on the pulley *b*, while the emery wheel is driven by a belt on the pulley *c*, which drives the pulley *e*, which is permanently attached to the pulley *f*. The belt on the pulley *f* drives a pulley on the emery-wheel

shaft, thus imparting power to the emery wheel *h*. The swinging frame *d* is supported from the countershaft bearings and the swinging frame *g* is counterbalanced by means of a weight *m* and a suitable rope passing over the pulleys, as shown. The emery wheel *h* is mounted on a shaft at the end of the swinging frame *g* and is provided with a yoke *l* and handles *i* and *k*, by means of which its motion can be controlled. The connecting portion *n* below the swinging frame *d* is so arranged that it can swivel in the frame *d*, and the portion connecting the swinging frame *g* with the shaft carrying the pulleys *e* and *f* is also arranged so that it can swivel. The result is that the emery wheel *h* can be turned to any angle or into almost any plane, either horizontal or vertical. This enables the operator to grind both surfaces and edges of the work, or to round corners. This class of machine has found a great field of usefulness, especially in the finishing departments of shops producing rather large work, but considerable skill on the part of the operator is required to produce a smooth surface with it.

63. Upright Surface Grinding. — Flat work may also be ground by holding it against the side of an emery wheel similar to that shown in Fig. 8, but this is rather an awkward and difficult method of procedure and, hence, emery wheels have been mounted on vertical axes so that the work may be placed on the side of the wheel and thus ground flat. Such machines are called *upright surface grinders* and are used to a considerable extent on some classes of work.

DISK GRINDERS.

64. All machines using emery wheels have the common disadvantage that it is difficult to keep the surface of the emery wheel true; hence, accurate work cannot be produced by this class of hand grinding machines without placing the machines under special runners and providing truing devices for the wheels. To overcome this difficulty, the **disk surface grinders** have been brought out. A

type of disk surface grinder is illustrated in Fig. 11. The grinding is done by means of emery cloth secured to the steel disks *a*. These disks are from $\frac{1}{2}$ inch to $\frac{3}{4}$ inch thick, are ground perfectly true and parallel, and are provided with a spiral groove on the side running from the center to the periphery. Emery cloth is then glued or cemented upon each side of these disks. In cementing the emery cloth on, it is pressed firmly against the disk so as to bed it into the groove. This provides a space into which any particles of emery or grinding dust will pass and so prevent them from scoring the surface of the work.

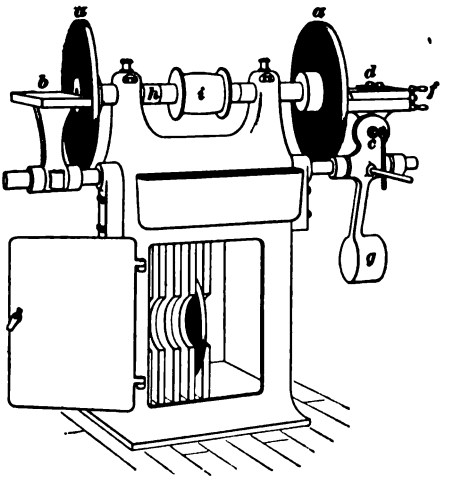

FIG. 11.

The disks are used until one side is dull and are then reversed and used until the other side is dull, when they are replaced by other disks and the worn ones recovered. The machine shown illustrates two principles of grinding that may be employed. At the left-hand side of the machine there is a simple flat table *b* whose upper surface is scraped at exactly right angles to the disk; by holding any flat surface upon this table, a surface at exactly right angles to it can be ground by the disk.

65. The manufacturers claim that it is easily possible to grind small work within the limit of .001 inch on these machines. When it is desired to grind at any other angle than a right angle, an attachment similar to that shown at the right-hand side of the illustration may be used. This is provided with a graduated circle on the piece *c* by means of

which the table can be set at any angle to the disk. It is also provided with a sliding guide *d* controlled by the handle *f* which operates the feed-screw. By providing a stop or indicator disk upon the handle *f*, the exact thickness to which the work is ground can be gauged within .001 of an inch; and by means of the graduated circle on the piece *c*, the angle between the faces can be accurately determined. This head is also provided with a balance weight *g* by means of which it can be arranged to oscillate within limits, thus swinging the work back and forth across the face of the grinding disk and so reducing the liability of producing scratches upon the surface. The disks are carried upon the shaft *h* driven by the pulley *i*. The machine is mounted upon a substantial base, provided with a cupboard for containing the grinding disks.

The disk grinding machine does not replace any particular machine tool in the shop as much as it serves to do work that is ordinarily done by filing, but it will be found possible to do a large amount of work that is ordinarily done at the bench on a machine of this class.

TOOL GRINDING.

HAND TOOL GRINDING.

66. General Consideration.—Under the heading of hand grinding may be classed the grinding of tools for turning and planing metal. A number of different machines are made for this purpose on which emery wheels are used; some of these grind dry and some wet. The wet grinding wheels may be divided into two classes, those that receive their water from the pump system and those in which the wheel runs in a trough or bath into which water may be admitted. The dry grinding machines are comparatively little used for tool grinding, because they are liable to draw the temper of tools; hence, only the wet grinding machines will be described.

WET GRINDING MACHINE.

67. Methods of Supplying Water.—A representative tool grinding machine intended for wet grinding is illustrated in Fig. 12. This machine is shown because it is arranged to provide for a supply of water without the use of pumps or pipes, and, also, because it has a truing device arranged in a wheel guard. In Fig. 12 a section of the

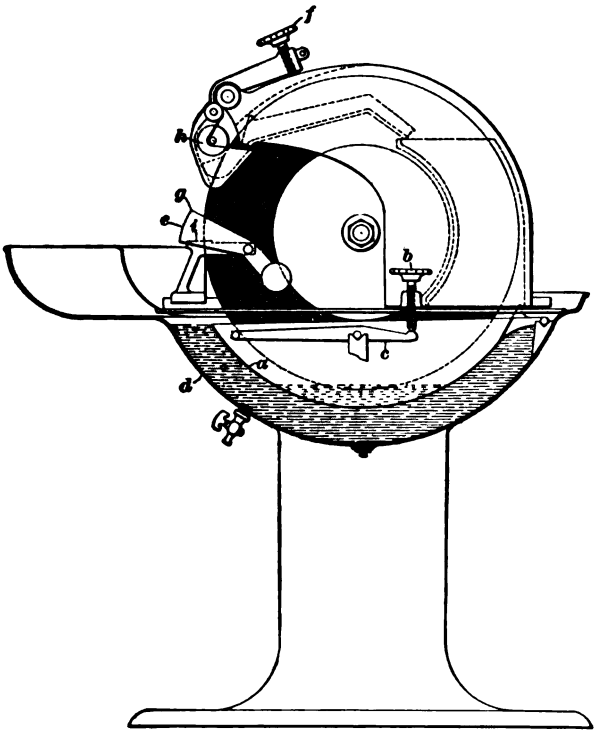

FIG. 12.

machine is illustrated, showing the manner in which the water is applied. The water tank *d* is filled with water while the water trough *a* is raised to its highest level by means of the screw *b* and the lever *c*, this water trough being pivoted at one end. The water trough *a* surrounds the lower part of the emery wheel and when in its highest position

prevents water from wetting the wheel; as the trough *a* or its forward end is lowered, it sinks into the surrounding water and allows it to flow in around the wheel. The trough is lowered sufficiently to obtain the amount of water desired by the operator; the wheel throws the water out at the rear, but an equal amount, of course, runs in at the forward end of the trough, thus keeping the supply constant.

68. Truing Device.—The truing device consists simply of a thread roll *h* mounted on the end of a rocking lever, so that the operator can force it against the revolving wheel by means of the screw *f*. This truing device is always ready for use.

69. Tool Rest.—The tool rest and guard in this style of machine are shown at *i* and *e*. This rest is surrounded by a guard *e* so arranged with a balance weight that it normally occupies the position shown. When the operator wishes to grind a tool, he places it on the point *g* and presses it downwards until the tool comes in contact with the rest *i*. When the grinding is being done, the guard rises and prevents water from spattering out in front, no matter how large an amount of water may be supplied to the wheel.

MACHINE TOOL GRINDING.

TYPE OF MACHINES.

70. General Consideration.—With the growth of machine manufacturing, replacing as it does the older method of machine making, it has become the practice in large machinery establishments to manufacture the lathe and planer cutting tools in large lots. These tools are all ground to the correct shapes and are ready for the workman to use. The old ones are reground and sharpened to the standard forms and then placed in the tool room, where they may at any time be obtained by the workman.

The shapes of the tools vary in different establishments, but usually each establishment fixes on standard shapes for all their cutting tools and the operator follows the blueprint of standards that is generally placed on the holders shown at the right of the machine in Fig. 13.

This matter of machine tool grinding has become of so much importance in the economy of cutting tools that it may be dignified as a trade, requiring (as relating to the establishment of standards and the grinding of these tools commercially) considerable study and care. It is probable that within a few years operators who are skilled in the art of tool shaping and grinding as related to the economy of cutting metal will be in demand.

There are two general classes of machines employed for this purpose, one of which uses an ordinary emery wheel and grinds the tools on the face of the emery wheel, while the other employs a disk wheel and grinds the tools on the flat face of the disk. The machine manufactured by Wm. Sellers & Company, Philadelphia, is a good representative of the first class, and that manufactured by the Gisholt Machine Company, Madison, Wisconsin, is a good representative of the second class.

71. Sellers Grinding Machine. — The Sellers machine shown in Fig. 13 is called a *universal tool-grinding and shaping machine*. This machine is so constructed that, with its fixtures and attachments, the accuracy of the form to be ground is not dependent on the skill of the operator, but is obtained by placing the various holders and attachments at the angles required, these being graduated and marked so that if the operator places them at the right graduation and angles, the accuracy of the grinding will be insured. When the tools are placed in the various holders, the operator moves them against the wheel by the use of a lever shown at *a*, Fig. 13. Water is supplied to the emery wheel by means of a rotary pump, and on one side of the machine is attached a diagram of instructions for obtaining the standard shapes. This diagram is shown at *b*, Fig. 13.

The Sellers machine is designed to present a line contact between the emery wheel and the work being ground. The makers believe that it is absolutely necessary, in order to efficiently grind steel tools by means of rapidly cutting wheels, that the contact between the two should be a line

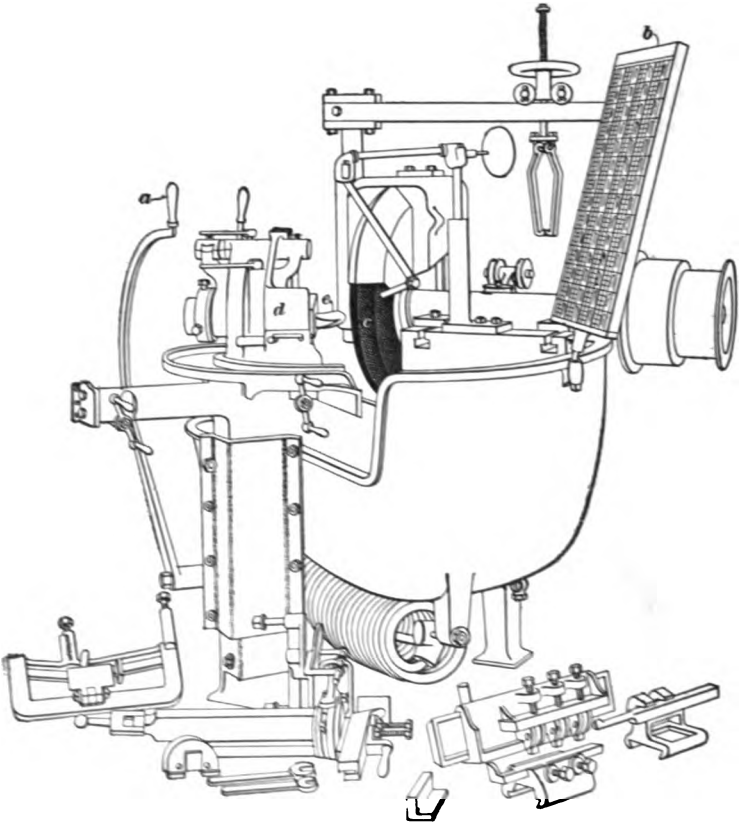

FIG. 13.

and not a surface; hence, if it is desired to grind a plain face of a tool, the wheel must have a cylindrical or conical surface past which the surface to be ground must be moved in a plane. They further state that the plane face of the wheel cannot be used for this purpose because it and the

surface being ground will soon coincide, with the result that no cutting will be done, though considerable heat will be produced.

72. The style of Sellers tool-grinding machine shown in Fig. 13 is provided with a conical wheel *c* and the tools are held in a suitable fixture *d*, one tool being shown at *e*. Another style of machine manufactured by the Sellers Company is arranged to pass the work across the periphery of an ordinary cylindrical emery wheel.

The Sellers machine will not only grind all angles and circles with cone clearance, but it will also, by the use of forms, grind irregularly shaped cutting tools. On this account, it probably has a greater range than any other machine on the market and is remarkably well adapted for shops having a large variety of tools.

73. Gisholt Tool-Grinding Machine. — This machine works on an entirely different principle from the Sellers and is intended only for grinding the regular angles and circles with clearance. For this reason, the Gisholt machine will not serve where an extremely large range of tools is required. As in the Sellers machine, the accuracy of the shape of the tool does not depend on the skill of the workman, but is obtained by the different angles at which the parts and various holders and fixtures are set, these angles being read from a chart. Water is supplied to the wheel on this machine by means of a pump, as in the Sellers.

The main point of difference between the two machines is in the method of presenting the work to the wheel. The Gisholt machine is illustrated in Fig. 14, where it will be seen that the grinding is done on the face of a cup-shaped wheel, the contact between the tool and the wheel being a surface and not a line contact, as the wheel and the surface being ground coincide. In actual practice, the grinding is done rapidly without heating when the right grade and grain of wheel are used and the work is moved past the wheel in the right manner to accomplish the desired results.

In this respect both machines are successful. The reason for the success of this style of machine will be shown under the heading "Selection of Wheels for Tool Grinding." The depth of cut is regulated by means of a cross-feed controlled

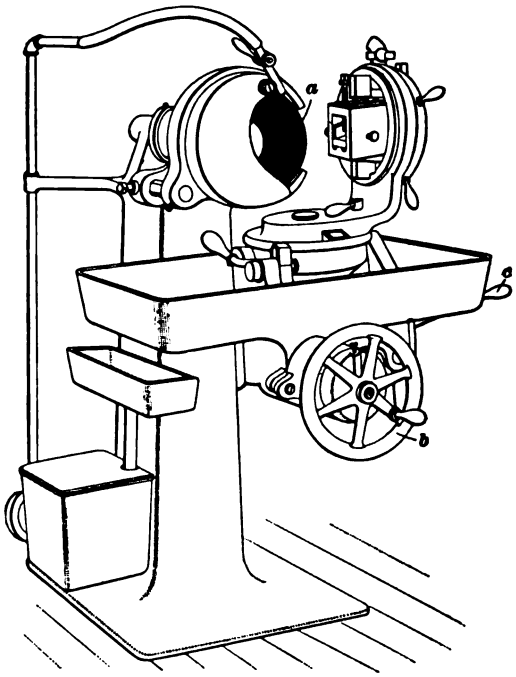

FIG. 14.

by a hand wheel *b* and the tool is carried back and forth across the face of the wheel by means of the lever *c*. The Gisholt machine is very simple and compact, as will be seen by the illustration.

SELECTION OF WHEELS FOR TOOL GRINDING.

74. Grade of Wheel.—In selecting wheels for tool grinding, as has been stated where the subject was under discussion, it should be understood that the result to be

obtained is dependent on many conditions in the wheel aside from the size of grain. The grade of the wheel plays a very important part in the manner in which it does its work. A good illustration in this connection is the case of the Gisholt and Sellers tool-grinding machines, which are designed to use diametrically opposite methods, one using a line contact only, to avoid heating and glazing, the other using a surface contact, and also avoiding heating and glazing.

75. In the case of the Gisholt machine, by using a cup-shaped wheel and grinding against its flat surface, advantage is taken of the possibilities of proper grading as related to the work in hand; for it is true that as the surface in contact becomes greater, the grade of the wheel should become softer, and may be much coarser. In the case of the Sellers machine, by using a line contact on the periphery or conical portion of the wheel, the wheel can be very much harder, which would be an advantage if the operator was grinding tools of irregular form and wished to preserve the shape of the wheel as long as possible. This is true also in many cases where it is desirable to have the wheel remain intact, without change of form on the face. The Gisholt machine is designed to grind flat surfaces, which are passed entirely across the face of the wheel at each stroke of the lever; hence, the face of the wheel is maintained in correct form and the desired result is obtained. At the same time, on the Gisholt machine the wheel may be soft enough and coarse enough to cut freely.

76. The emery wheel for tool grinding should be soft enough to cut freely without requiring too great pressure and without glazing. If only very large tools that present broad surfaces to the wheel are to be ground, the wheel should be softer than if only those tools presenting very small surfaces are to be passed over it. The exact number of emery and the grade of wheel to be used in all cases

cannot be given, because conditions vary so much. It is safe to assume that wheels for this purpose should be so made that the desired surface on the tool will be dependent on the grade of the wheel rather than the grain; that is, the wheels should be quite coarse and very porous, for, as has been stated before, a coarse wheel will produce quite a fine finish if of the right grade and run at the right speed for the work in hand.

77. Some workmen prefer to use a coarse wheel for shaping the tool, and a much finer one, quite soft, for a slight cut to give the desired surface for a cutting edge. In most cases, however, only one wheel is necessary, provided the workmen use an oilstone for the finishing touch.

78. The tendency among users of tool grinders is to select wheels much too hard for the purpose. This is owing to the fact that workmen almost universally fail to appreciate the emery wheel, and do not understand how light a touch is required to grind work very rapidly on a good wheel. A soft wheel, suitable for grinding tools rapidly, will remove a large amount of material instantly with a very light touch of the tool upon it. But as workmen have invariably acquired their experience by using grindstones, they nearly always bear hard upon the emery wheel when grinding tools. This will wear a good wheel very rapidly and cut holes at intervals in the periphery. Thus it is that the purchasers of emery wheels for machinery establishments must select harder wheels than is necessary in order to preserve them.

It is a common complaint among manufacturers of tool grinders that they are obliged to send out wheels that are much harder than the purpose requires. The three wheels that are used quite commonly in tool grinders are the following: Size of grain, No. 30, grade O; size of grain, No. 36, grade N; size of grain, No. 45, grade N; all of them being designated by the Norton Emery Wheel Company's standard.

MACHINE GRINDING.

79. General Consideration.—Machine grinding may be defined as the art of producing very accurate plane, cylindrical, and conical surfaces by an abrading process performed in an automatic grinding machine. Machine grinding differs essentially from hand grinding in that the accuracy of the surfaces produced by it is dependent almost entirely on the accuracy of the machine in which the grinding is done, instead of on the skill of the workman.

In the early attempts that were made to produce very accurate plane, cylindrical, and conical surfaces, a common emery wheel was mounted on a metal planer or on a lathe; in fact, the first forms of grinding machines for cylindrical and conical work were called **grinding lathes.** The early attempts were far from satisfactory, and many persons supposed that the errors frequently found in the work were inherent to the grinding process, and could not be eliminated; in other words, it was supposed that grinding was incapable of producing true work. Painstaking experiments and a careful study of the conditions convinced the pioneer advocates of machine grinding that the faulty work produced was partially due to the selection of wheels illy adapted to the work expected of them, and chiefly to defects inherent to the machinery used. The machinery was gradually improved and the defects were overcome; and with wheels selected to suit the work, the grinding machine of today can be truthfully said to produce round work as accurate as can reasonably be expected and was ever hoped for; in addition to this it was found that some lines of work could be finished to exact size in much less time than by any other method.

80. Classification of Machine-Grinding Operations. — The different grinding operations for which a grinding machine is used may be classified according to the position of the surface operated on as *external grinding* and *internal grinding;* or they may be classified according to the character of the surface as *surface grinding*, which

term is commonly understood to be an abbreviation for "plane surface" grinding, *cylindrical grinding*, and *conical grinding*.

81. External grinding may be defined as a grinding operation performed on the outside surface of a solid; **internal grinding**, as the grinding of the inside surface of a hole. The term **surface grinding** is almost invariably understood to denote the grinding of a plane surface in a machine where the work reciprocates in a straight line, while the term **radial grinding** or **disk grinding** is applied to the grinding of plane surfaces on work rotating about its axis. **Cylindrical grinding**, as implied by the name, denotes the grinding of a cylindrical surface, which may be the inside or the outside surface of a solid. **Conical grinding** is a term that refers to the grinding of a tapering solid of revolution, by **solid of revolution** being meant a solid generated by the revolution of some plane figure about a line as an axis. Thus, a *cylinder* is a solid of revolution generated by revolving a rectangle about one of its sides as an axis; a *right cone* is generated by the revolution of a triangle about one of its sides, etc.

GRINDING SOLIDS OF REVOLUTION.

82. Governing Conditions.—The fundamental principle underlying the grinding of solids of revolution is the application of thousands of cutting points to the surface of the work while it is being slowly revolved about its axis. Each cutting point removes an exceedingly small amount of metal; consequently, the pressure due to the cutting operation is very light. It follows, therefore, that the disturbance of the axes of the work and the wheel is correspondingly small, owing to which fact the resulting solid of revolution is exceedingly true.

If the grinding wheel is traversed along the surface of the revolving solid in a *straight* line parallel to the axis of rotation of the solid, the latter will be ground truly cylindrical;

but if the line of motion of the wheel is at an angle to the axis of rotation of the solid, the latter will be ground conical. It is obvious that the grinding wheel may remain stationary, and that the work may be traversed past it without affecting the result.

In practice, the work or the wheel is made to travel in a straight line by mounting either one on a carriage that slides on straight guiding ways that are so designed as to resist wear, and so protected against injury as to remain true as long as the whole machine can reasonably be expected to last without overhauling and repair. When grinding conical work, it is absolutely necessary that the cutting be done along a line lying in the plane containing the axes of the wheel and work, or, as commonly expressed, the wheel and work must be at the same height above the ways.

83. Classes of Machines Used.—There are two general classes of grinding machines, which are called *plain grinding machines* and *universal grinding machines.* The **plain grinding machines** are designed especially for manufacturing and are made as rigid as possible so as to enable them to do rapid work. All unnecessary adjustments are dispensed with and the machine is made with as few joints as possible. This class of machines is intended for grinding plain cylindrical or slightly conical work, such as spindles, rolls, shafts, etc. In all cases the work runs on dead centers. The **universal grinding machines** are provided with more adjustments, and are adapted for grinding internal or external work (either straight or tapered), cutters, reamers, etc.

CONSTRUCTION OF GRINDING MACHINES.

84. Plain Grinding Machine. — Fig. 15 shows a front and Fig. 16 a rear view of a plain grinding machine, made by the Brown & Sharpe Manufacturing Company, of Providence, Rhode Island. The entire machine is supported

upon a rigid base *a*. The carriage *b* can be moved along the base by the hand wheel *c* or arranged to move back and forth automatically by setting the stops *d* and *e* at the desired places. The table *f* is pivoted upon the carriage *b* so that it can be brought parallel to the line of travel or set at a slight angle for grinding tapers. One end of the carriage *f* is graduated either in degrees or inches per foot, so as to

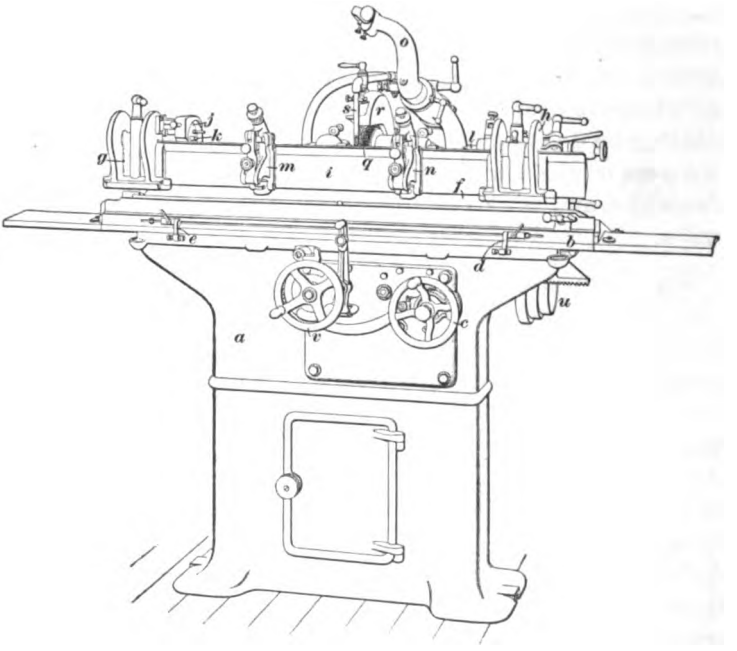

FIG. 15.

assist in setting the work to approximately the right position, the final setting always being made by trial. The headstock *g* and footstock *h* are clamped to the carriage as shown. The main bearing surface for both headstock and footstock is vertical, as shown at *i*. One object of this is to have the main bearing for the headstock and the footstock parallel to the center line of the work and so arranged that differences in the pressure used in clamping the parts, wear, etc. will

have as little influence on the alinement of the work as possible. Another object of this design is to so locate the bearing surfaces that they will be protected from emery dust and water without the use of guards that have to be adjusted for every change in the length of the work being ground.

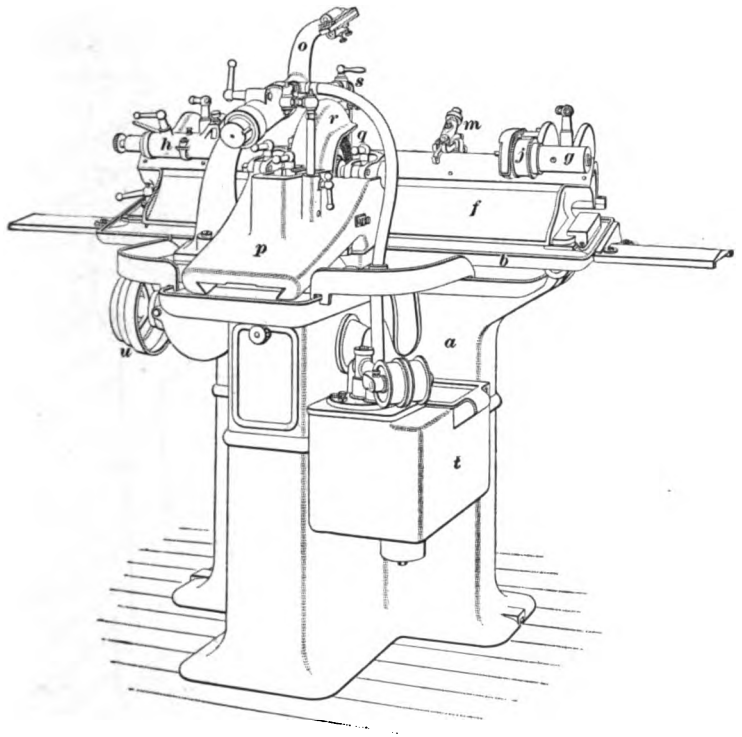

FIG. 16.

Both centers are dead, that is, they do not revolve. The pulley *j* is driven by a belt from an overhead drum that is driven by cone pulleys, so that the speed of the work can be adjusted. The dead centers are shown at *k* and *l*. To assist in supporting the work, fixed rests *m* and *n* may be used or a follower rest may be attached to the arm *o*. The grinding wheel is carried upon the grinding-wheel slide *p*, which is well supported from the floor. The grinding-wheel slide *p*

is set on an incline so that it tends to slide away from the work. This removes all danger of the wheel being

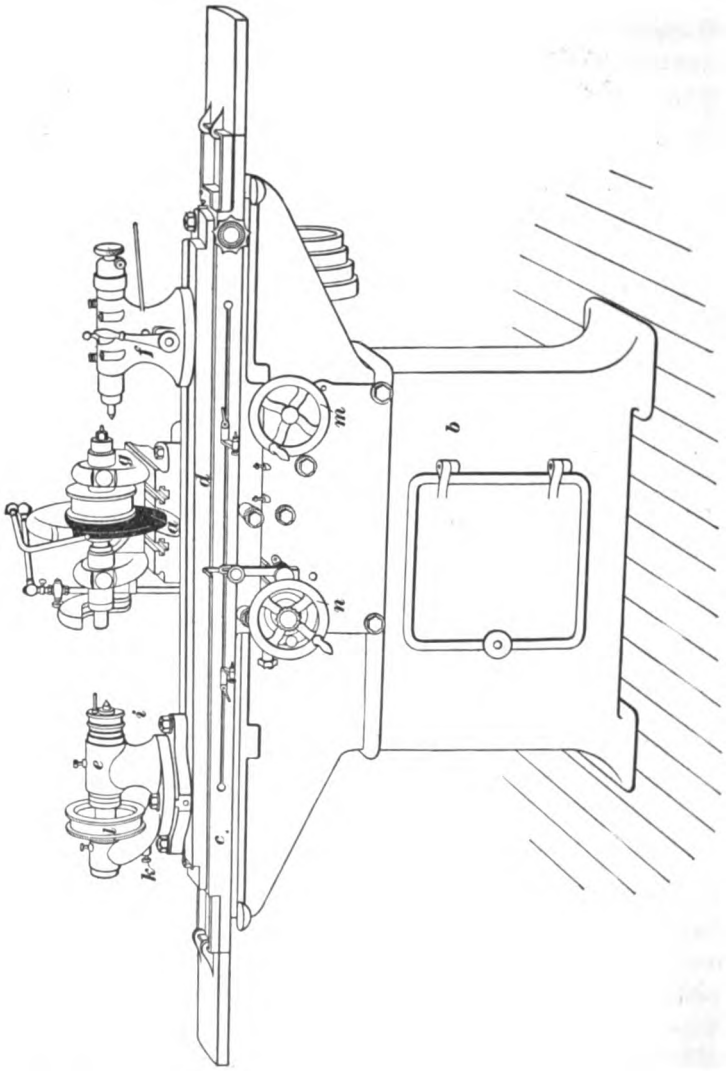

FIG. 17.

moved toward the work on account of any vibration. The emery wheel *q* is provided with a guard *r*, and provision is

made for flooding the work with water from the pipe *s*. The water flows back to the tanks *t*, from which it is pumped to the work again. The emery wheel is driven by belts from an overhead drum, and provision is made for varying the speed of the wheel by a series of cone pulleys. The table feed is driven by a belt on the cone pulley *u*.

The grinding wheel and grinding-wheel stand are moved toward or away from the work by means of the hand wheel *v*. Back of the hand wheel *v* is arranged an automatic cross-feed mechanism that will be described later.

As previously stated, both the headstock and tailstock centers are dead. This eliminates errors in the roundness of the work due to want of roundness in the live spindle, and any errors that might be caused by the live center running out of true. Work ground carefully on dead centers can be reversed end for end and will then run so true that even a very sensitive indicator will fail to show any error. This test is so rigid that it is very seldom that work done between centers, where one center is a live one, will pass it satisfactorily.

In the machine described, the grinding-wheel carriage stands still and the work moves past it. In the machines manufactured by the Landis Tool Company, of Waynesboro, Pennsylvania, the table carrying the work stands still and the grinding-wheel carriage moves along the work.

85. Universal Grinding Machine. — A universal grinding machine, as made by the Brown & Sharpe Manufacturing Company, Providence, Rhode Island, is shown in Fig. 17. In this particular design of machine, the emery wheel *a* normally remains stationary during the grinding and the work is traversed past it. The guideways are formed on top of the base *b*, and serve to guide a long carriage *c* to which the table *d* is pivoted. This table carries the headstock *e* and footstock *f*, which can be clamped to it in any position throughout its length. The emery-wheel stand *g* is mounted on a slide that normally is at right angles to the guideways on top of the frame. This stand *g* can be moved

along its slide toward or away from the work by turning the wheel *n*. The slide on which the emery-wheel stand is mounted is pivoted to its base, to which it can be clamped at any angle with the guideways that the construction permits. This allows short conical work having a large included angle to be ground; in that case the table *d* carrying the work will remain stationary while the wheel is traversed past the work.

86. In universal machines the headstock has a live spindle to which a chuck or a face plate may be fitted; this live spindle is driven by a belt from an overhead drum. Provision is made for grinding on dead centers by placing a loose pulley *i* on which a belt can be put, on the end of the live spindle, and providing a suitable arrangement for locking this spindle—in this case, a movable pin *k* that can be inserted into a hole in the pulley *l*. The headstock is placed on a base to which it is pivoted in order to allow the axis of the live spindle to be placed at any angle with the table that the construction of the machine permits. This adjustment permits conical work held in the chuck or face plate to be ground without disturbing the setting of the table or of the slide carrying the emery-wheel fixture. The headstock base, bottom of grinding-wheel stand, and end of the table are all provided with graduations. These graduations are used in setting the different parts of the machine to approximately the desired angle for any work in hand.

The carriage *c* is moved past the emery wheel by turning the hand wheel *m*; it is also provided with a feed that can be automatically stopped at any point within the range of motion of the carriage.

87. The footstock of a grinding machine serves the same purpose as the tailstock of a lathe, but differs considerably from it in its general construction. The footstock spindle of a grinding machine, as a general rule, is provided with some form of a spring that operates it and regulates the pressure with which its center is pressed into the center of the work. Such a regulation of the pressure contributes, in

a large measure, to the accuracy of the work, inasmuch as it prevents springing of the work by an excessive setting up of the footstock center which a careless operator is very apt to do. This spring also maintains a constant pressure on the center, even though there may be considerable wear of the center hole, or the work be lengthened by expansion.

88. Fig. 18 shows the construction of the footstock of the grinding machine made by the Landis Tool Company. A lever *a* is pivoted to the frame of the footstock; it carries a pin *b* at one end that is placed in a hole cut into the spindle *c*. The lower arm of this lever is acted on by a plunger *d* and a helical spring *e*; this spring tends to move the footstock spindle forwards. Obviously, the pressure with which the footstock center presses against the work is that caused by the tension of the spring *e*. The tension

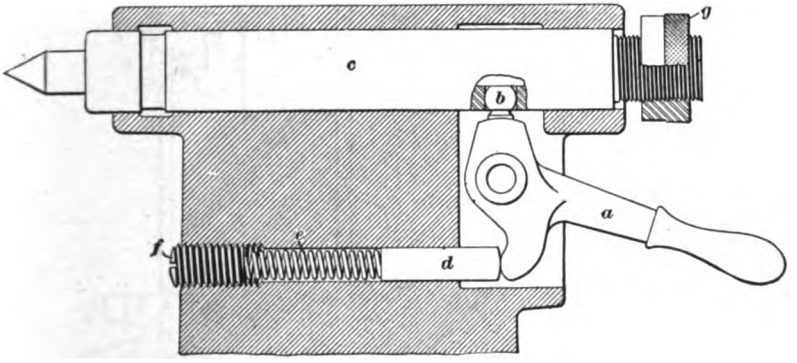

FIG. 18.

of this spring can be regulated by means of the adjusting screw *f*. For very small work, even the lowest tension of the spring may cause enough pressure to bend the work, in which case the pressure may be relieved to any desired extent by screwing the nurled relieving nut *g* against the end of the footstock. If this is done, the operator must use great care not to turn the relieving nut so much as to loosen the work, which can be told by tightly grasping the work and, while shaking it, observing if there is any end play.

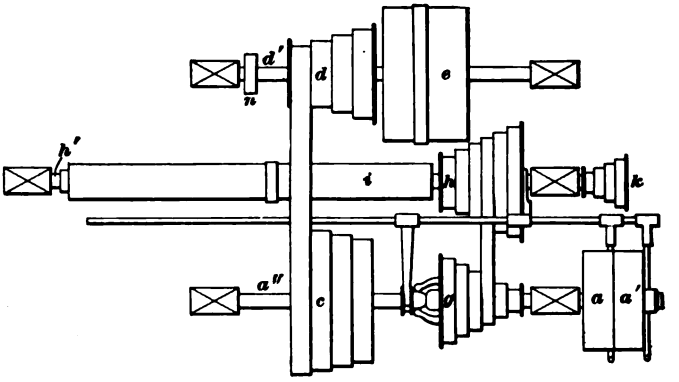

(b)

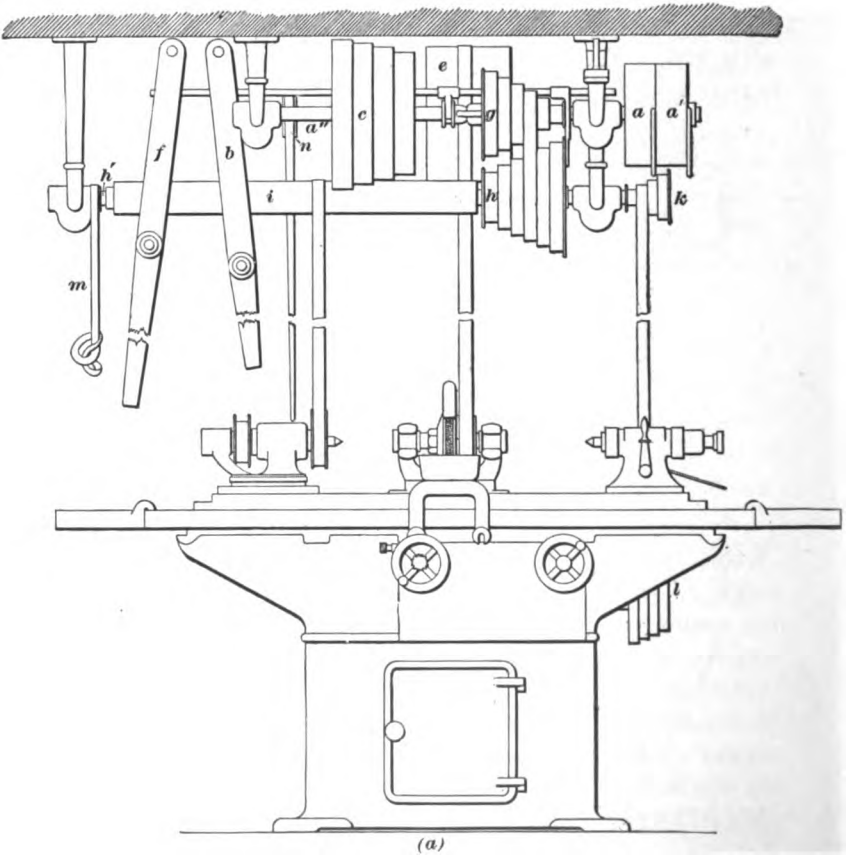

(a)

FIG. 19.

Footstocks are constructed in a number of ways by the different manufacturers of grinding machines; it is believed that all of them, however, contain a provision of some kind for preventing an excessive pressure on the work in the direction of its axis.

89. Overhead Arrangements. — Figs. 19 and 20 show the arrangement of the countershafts for the universal grinding machine illustrated in Fig. 17. Fig. 19 (*a*) is a front view, Fig. 19 (*b*) a plan of the overhead arrangements,

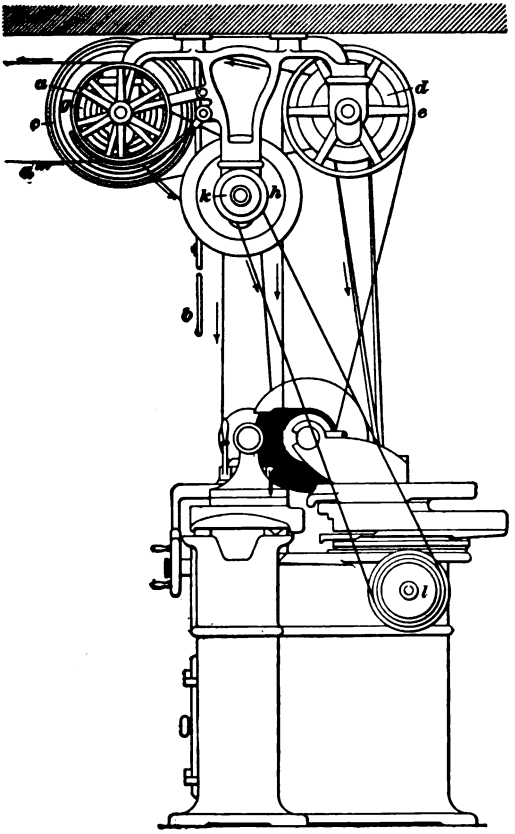

FIG. 20.

and Fig. 20 an end view of the machine. A tight and a loose pulley *a* and *a'* are placed on the countershaft *a''*, which is driven by belting it to a line shaft, and which can be stopped and started by shifting the driving belt *a'''* by means of the shifter *b*. A cone pulley *c* is keyed to the countershaft *a''* and is belted to a cone pulley *d* on the emery-wheel countershaft *d'*, which carries the cylindrical pulley *e* that is belted to and drives the emery-wheel shaft. From this arrangement, it follows that the emery wheel is stopped and started by operating the shifter *b*. A cone pulley *g* is placed on the countershaft *a''*, to which it can be attached by means of a friction clutch operated by the shifter *f*. The cone pulley *g* is belted to a cone pulley *h* on the headstock countershaft *h'*, which carries the long cylindrical drum *i* that is belted to the headstock. Two separate belts are provided for driving the work, one of which is used for grinding on dead centers and the other for rotating the headstock spindle for chuck work and face-plate work. The belt that is not in use, as the belt *m* in this case, is removed from the drum and hung up where it is out of the way. The different feeds are driven from the headstock countershaft *h'* by belting the cone pulley *k* to the feed cone pulley *l*. By tracing out the belting, it will be seen that the work will have a direction of rotation opposite to that of the emery wheel. A rotary force pump is driven by belting it to the pulley *n*.

It is necessary in any grinding machine to so arrange the countershafts that the speeds of the emery wheel and of the work can be changed independently of each other in order that the best speed may be obtained for each. The changes of speed are usually obtained by placing the belts on different steps of the cone pulleys.

90. Automatic Cross-Feed.—The best grinding machines are now fitted with automatic cross-feeds. This feed differs essentially from that of a lathe, however, in that its purpose is *not* a constant movement of the grinding wheel in a direction crossing the axis of the

work. Rather, its purpose is to automatically advance the grinding wheel a predetermined distance toward the axis of the work as soon as the wheel or the work has come to the end of its longitudinal traverse; the automatic cross-feed is intended to repeat this operation a predetermined number of times and then automatically stop the advance of the wheel toward the axis of the work. In other words, the automatic cross-feed relieves the operator from the necessity of feeding the grinding wheel forwards after each cut, and, furthermore, when correctly set will grind the work to the desired diameter and then automatically stop grinding, thus preventing the grinding of work too small.

91. Automatic cross-feeds are constructed in various ways, but the principle upon which they work can be illustrated by a description of the one illustrated in Fig. 21, which shows the details of the cross-feed used upon the machine shown in Fig. 17. The length of the table stroke is controlled by the stops *i* and *j*, which operate the lever *g*, thus reversing the table. The cross-feed is operated by the mechanism attached to the lower end of this lever *g*. When the hand wheel *h*, a portion of which is broken away in the illustration to show the details, is rotated in the direction of the arrow, the grinding wheel is moved toward the work, and when rotated in the opposite direction, it is moved away from the work. The ratchet wheel *a* is attached permanently to the hand wheel and contains a slot *m* carrying a loose ring. To this ring is attached a block *l*, the block being pivoted to the ring at *n* and being provided with a latch *p*, which is so arranged that when it is pressed against the stop shown on its right, it will move the ratchet one tooth. The latch *p* can be disengaged from the ratchet by raising the left-hand end of the block *l*, provision for this being made by the slot which surrounds the screw, as shown in the illustration. The block *l* carries a shield *r*, which, by passing under the point of the pawl *b*, can prevent its engaging the ratchet wheel. The ratchet wheel is operated

by means of the pawl *b*, which is connected to the lever *c*, the latter being pivoted at *d* and being operated by an inclined block that engages the lower end of the lever *g*. The amount that this block engages the lever *g* is controlled by

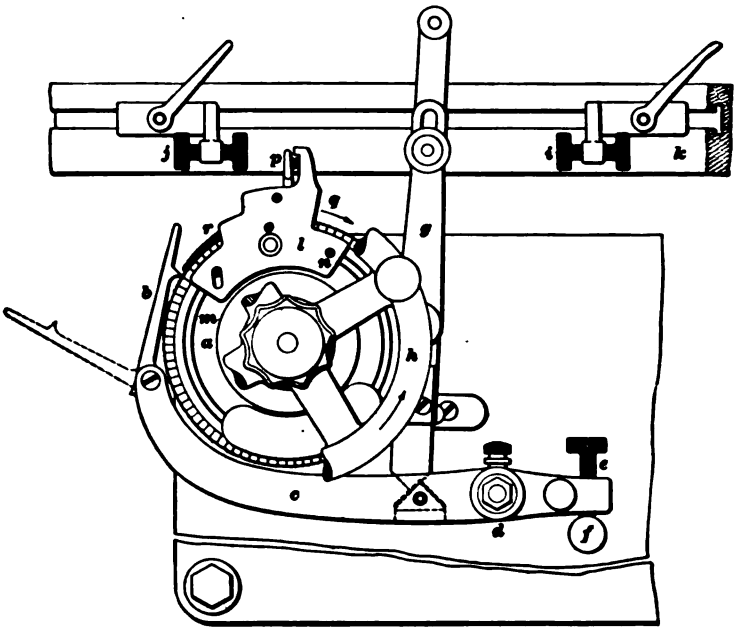

FIG. 21.

the screw *e* and stop *f*. By this means the lever *c* can be so adjusted that the pawl *b* will move the wheel through one or more teeth at each end of the stroke, that is, whenever the lower end of *g* is thrown across the V-shaped stop upon *c*.

92. Having described the uses of the various parts, the operation of adjusting the cross-feed may be described as follows: The stroke of the table *k* is adjusted by means of the stops *i* and *j*, after which the hand wheel *h* is carefully turned in the direction of the arrow until the wheel nearly or just touches the work. The stroke of the table is then stopped, and without changing the hand wheel *h* the screw *o*

is loosened and the block *l* raised until the latch *p* is out of contact with the teeth of the ratchet. The block *l* is held in this position with the right hand, while with the left hand the pawl *b* is swung into the notches of the ratchet, after which the block *l* is moved around until the point of the throw-out shield *r* is just past the tooth occupied by the pawl *b*, the pawl being lifted out of the way to allow the shield to pass. The block *l* is then let down so as to bring the latch *p* into contact with the ratchet once more, and the thumbscrew *o* tightened. The pawl *b* is then thrown back against the shield *r*, which will prevent its coming in contact with the ratchet. The table stroke is next started, and if the pawl *b* does not engage the teeth of the ratchet when the lever *g* depresses the lever *c*, it may be made do so by pressing one or more times upon the latch *p*. This is done by placing the thumb against the latch and the forefinger against the projection extending up from the block *l*. The pawl *b* will then turn the ratchet and hand wheel, thus feeding the emery wheel forwards until it cuts the work, the pawl once more coming to rest upon the shield *r*. Allow the machine to run until the cut is practically ended, stopping the table at the footstock end of the stroke with the shifter and overhead brake. Now measure the work, ascertaining the quarter-thousandths to be taken off to bring it to the correct size. Press the latch *p* once for each quarter-thousandth of an inch; thus, for .003 inch, press the latch 12 times, start the table, and the pawl will move the ratchet until the shield *r* prevents the pawl *b* catching another tooth Allow the wheel to pass over the work until it shows the same cut as when the measurement was taken and stop the table at the footstock end, as before. If a suitable wheel is used, the diameter will show a reduction of .003 inch. If the work does not show this reduction, the latch *p* is pressed once for every quarter-thousandth further reduction necessary, and the machine started up once more, as before. When the work is the right size, the pawl *b* is thrown out and, without changing the position of the block *l*, the hand wheel *h* is turned in a direction opposite to

that of the arrow for about one turn. This will remove the emery wheel from the work. When the next piece of work is in place and the table stroke started, the hand wheel is turned in the direction of the arrow until the emery wheel just cuts, then the pawl *b* is thrown into the notches and the machine allowed to continue its work until the shield *r* has again stopped the feed by disengaging the pawl *b* from the ratchet wheel. When the emery wheel shows the same cut that it did when finishing the first piece, the machine is stopped as before and the work measured. If the work is large, the latch *p* is pressed as many times as the work is quarter-thousandths large and the grinding continued until the right dimension is obtained. After the wear of the wheel has been determined, it is possible to press the latch *p* the proper number of times before beginning the cut on each new piece and thus finish the piece to the exact size at one operation.

93. When setting the automatic cross-feed, it must be remembered that the depth of each cut is dependent on the number of teeth the ratchet is moved at the end of each stroke. The number of teeth that the ratchet wheel is moved at each stroke is controlled by means of the adjusting screw *e*, which controls the movement of the lever *c* and the pawl *b*. The throw-out shield *r*, by its position, simply determines the total depth of the successive cuts, that is, the total distance that the grinding wheel is moved toward the work.

94. The diameter of the work produced by the automatic cross-feed should be measured after the wheel has stopped cutting, or when the amount of sparks given off shows that it is cutting at the same rate that it did when the previous piece was measured. The reason for this is that the grinding wheel will continue to reduce the diameter slowly for some time after the feed has been stopped.

95. The cross-slide on which the wheel of a grinding machine is mounted must move quite freely in order that

it may be moved an amount as small as .000125 inch. In order to keep the wheel slide in good condition, it should be oiled with good oil each day and moved throughout its entire length during the operation, so as to insure thorough lubrication. If the wheel slide is allowed to remain stationary for some time without lubrication, it may be necessary to clean the parts before they will work freely again, though usually the working of a good quality of oil through the oil holes and the moving of the parts throughout their entire travel several times will put the working parts in good condition.

96. The automatic cross-feed is a valuable addition to the grinding machine, on account of the fact that it not only enables the operator to attend to other details while the piece is grinding, thus saving much time, but by uniform movement it maintains the proper condition of the emery wheel and increases its sizing power. This latter feature is one that has received very little attention in the past, but is of great importance if it is desired to finish duplicate pieces.

GRINDING.

(PART 2.)

GRINDING SOLIDS OF REVOLUTION.

ADVANTAGES OF GRINDING.

1. When grinding machines were first designed, they were used almost entirely for hardened work, the prevailing idea being that grinding was a refined perfecting process suitable only for the finishing of hardened work that required a great degree of accuracy. This idea still prevails in many quarters, but it is incorrect, since experience has shown that whenever a suitable grinding machine is intelligently used the accuracy that may be attained when soft work is finished by grinding is accompanied by a reduction in the cost of the work over that which has been accomplished by other processes. Thus, many kinds of cylindrical work, such as shafts, spindles, studs, arbors, etc. that are made of soft steel may be turned to nearly the finished size, and then by careful filing, followed by an intelligent application of emery cloth, brought to the correct size. By using a grinding machine, however, most of the cost of the files and emery cloth is eliminated from the charges against the work; furthermore, the quantity of metal left for finishing can be removed much faster by grinding than by filing or turning in the lathe, at least on work that is within the capacity of the grinding machine.

Copyright, 1901, by THE COLLIERY ENGINEER COMPANY.
Entered at Stationers' Hall, London.
All rights reserved.

2. It has been shown in actual practice that a grinding machine fitted with a 12-inch grinding wheel, which is a common size, will reduce a cylindrical piece of steel from .005 inch to .012 inch in diameter in less time than would be consumed in reducing the diameter an equal amount in a lathe. With especially heavy and powerful grinding machines, a greater amount than that named above can be removed.

3. While the grinding machine may in the future be developed sufficiently to adapt it for roughing out work, it is not developed enough for that at present, and the work must come to the grinding machine roughed out to within .005 inch to $\frac{1}{16}$ inch of the finished size in order that the machine may not work at a serious disadvantage. When the amount of metal to be removed is within the limits stated, grinding is not only an economical, but is also a very desirable, finishing process on account of the great accuracy attainable.

4. An emery wheel having a diameter of 18 inches and a face $\frac{3}{4}$ inch wide, when running at its ordinary speed, presents approximately 2,500,000 cutting points to the work in 1 minute, and a wheel of the same diameter, but having a face $1\frac{1}{2}$ inches wide, presents about 5,000,000 cutting points to the work in the same period of time. Each of these cutting points removes a very small amount of metal; but when the aggregate amount is considered it is comparatively large. Furthermore, in modern grinding machines the cutting points pass over from 1 to 4 square feet of surface per minute. The statements just made will serve to explain why, within reasonable limits, the grinding machine can remove metal faster than the lathe, with its single cutting point.

5. The purposes and advantages of machine grinding may be briefly summed up as follows: In the first place, it is economical to finish work to size by grinding; in the second place, the accuracy attainable is very great. The first advantage named is, today, the most important one,

and fits the grinding machine for manufacturing purposes on work within its range and capacity; accuracy is given the second place, because the accuracy readily attainable by grinding is far beyond that which is necessary on most duplicate work.

SELECTION AND USE OF GRINDING WHEEL.

SELECTION OF WHEEL.

6. Grade.—In order that the grinding wheel used in machine grinding may cut freely, that is, with little or no pressure, it is desirable that the wheel be "self-sharpening." A *self-sharpening grinding wheel* is one in which the dulled particles of the abrasive material break away readily during the grinding operation, and the ease with which these particles become detached, or the resistance that they offer to breaking out, determines the **grade** of the wheel. Thus, if the particles break away readily, the wheel is said to be **soft,** while one that offers considerable resistance to the detaching of the dulled particles is called **hard.** From this explanation it should be plain that the terms "soft" and "hard," when applied to a grinding wheel, do *not* refer to the relative hardness of the abrasive material, but merely to the facility with which the dulled particles become detached.

7. Causes of Glazing.—It is evident that the longer the dulled particles are retained, the duller will they become, and that, consequently, more pressure will be required to make them cut. Undue dulling of the particles is also caused by an excessive speed. The dulling of the particles manifests itself by the glazed appearance of the cutting surface of the grinding wheel, and by considering the causes of this glazing we would be justified in drawing the conclusion that *a wheel that glazes rapidly is either too hard for the work it is performing or is run too fast.* A wheel that

requires much pressure to make it cut will not produce the best results, no matter how rigid the machine in which it is used may be, for the reason that the pressure of the grinding will disturb both the axis of the wheel and the axis of the work.

8. Influence of Hardness of Material.—Since different materials vary in their hardness, the rate at which they will dull the grinding wheel also varies. Naturally, the harder material will dull the abrasive substance incorporated in the wheel more rapidly than will the softer material; from this we may draw the conclusion that *the harder the material is, the softer should be the grade of the grinding wheel.* Because of this fact, it should be remembered, when considering the working of different grades of steel, that since high-carbon steels are harder than steels containing only a low percentage of carbon, they require a softer grinding wheel, while low-carbon steels can be advantageously ground with a wheel that is harder and denser.

9. The different high-carbon steels of the variety known among shopmen as "tool steel" vary but little in their relative hardness, and, consequently, a wheel suitable for one kind of such high-carbon steel will work satisfactorily on most other grades of such steel. Steel that is low in carbon, commonly called "machinery steel" by shopmen, is quite soft, and experience has shown that it can probably be ground best by using a **combination wheel,** which is a wheel in which several sizes of grains are incorporated. Thus, a wheel in which No. 36, 46, 60, 80, and 100 emery is incorporated is a combination wheel that is suitable for some kinds of work.

10. Influence of Vibration of Work.—The steadiness of the revolving work while it is being ground must be considered in deciding on the grade of the wheel that is to be used. If the work vibrates somewhat, the wheel should be harder than if the same work was perfectly free from vibration. The reason for using a harder wheel is that the vibration of the work has the same effect on the cutting

surface of the wheel as a succession of hammer-blows, which would break the particles of the abrasive material away too rapidly if a soft wheel were used.

DIRECTIONS FOR SELECTING WHEELS.

11. In order to aid the grinding-machine operator in selecting a suitable wheel, the Landis Tool Company publish the directions given below, where the grade of the wheel is given in accordance with the standard of the Norton Emery Wheel Company.

12. Wheels for External Grinding.—For grinding hardened steel, in roughing it down to nearly the desired size, use a No. 60 emery wheel, grades K to M; for finishing hardened steel, according to the degree of finish desired, use a No. 60, 80, 100, 120, or 150 emery wheel of the grades I to M. For roughing soft steel down to nearly the finished size, use wheels from No. 46 to No. 60 of the grades M, N, or O; and for finishing soft steel, use, according to the degree of finish desired, wheels from No. 60 to No. 180 of the grades L or M. For roughing cast iron down to nearly the finished size, use wheels from No. 46 to No. 60, and of the grades G to K; for finishing cast iron, use wheels from No. 60 to No. 80 of the grades K to M. To finish brass or bronze, use a wheel from No. 60 to No. 120, according to the degree of finish desired, and of the grades F to K.

13. Wheels for Internal Grinding.—For roughing out soft or hardened steel, use a wheel from No. 46 to No. 60 of the grades G to K, and for finishing soft or hardened steel, use a wheel from No. 60 to No. 100 of the grades E to F. For roughing out brass or bronze, use the same wheels as for roughing out steel; for finishing brass or bronze, use, according to the degree of finish desired, a wheel from No. 80 to flour emery of the grades E to F.

14. The directions here given should be considered merely as an aid in selecting a wheel. The results must be

observed and the wheel then changed to suit, if found unsatisfactory. The Brown & Sharpe Manufacturing Company recommend that for internal grinding only corundum wheels be used.

15. Shapes of Wheels.—Emery wheels and similar grinding wheels are made in various shapes by the different manufacturers; some of the shapes most commonly used in

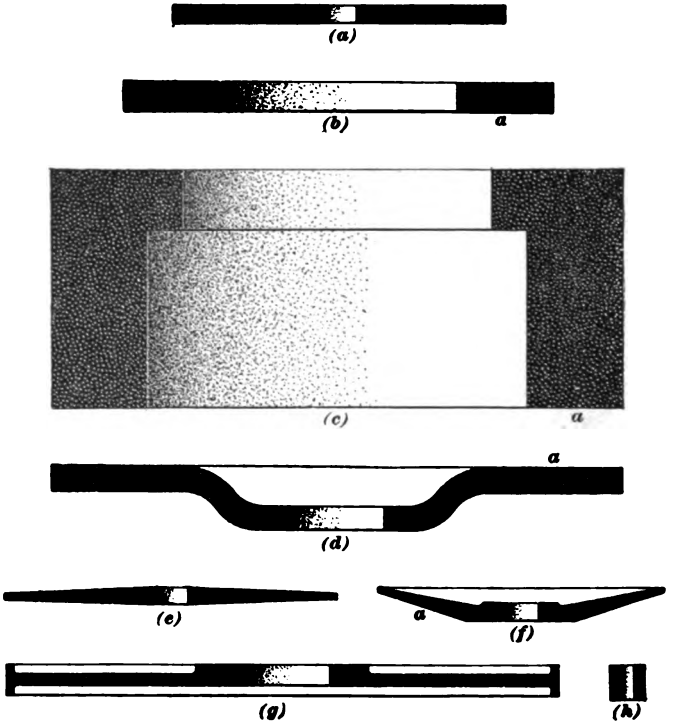

FIG. 1.

machine grinding are given in Fig. 1. Wheels having the shape of a flat circular disk with a small central hole, as the one shown in Fig. 1 (*a*), are used for external grinding, the cutting being done by the periphery. The wheels most commonly used on universal grinding machines have large

central holes, as shown in Fig. 1 (*b*). Such wheels are mounted on special arbors or upon bushings on an ordinary arbor. Cupped wheels like the one shown in Fig. 1 (*c*) are usually mounted directly upon the spindle and are used for surface grinding, the face *a* being used for this purpose. Sometimes these wheels are made without the shoulder for attaching them to a spindle, in which case they are simply plain cylinders. Such wheels are mounted in a chuck and used for surface grinding. If the wheel shown in Fig. 1 (*b*) had a face several inches wide, it could be used for surface grinding by mounting it in a chuck, the work being done upon the face *a*. A wheel that has the shape shown in Fig. 1 (*d*) is used for grinding close to the shoulder of work that has a very large flat shoulder; the shape of the wheel permits this to be done since it allows the face of the nut that fastens the wheel to the spindle to come below the face *a* of the wheel. The grinding is done by the periphery of the wheel.

16. A narrow conical wheel, like the one shown in Fig. 1 (*e*), is much used for grinding the clearance of reamers, milling cutters, and similar cutting tools in cutter-grinding machines, in which case the wheel is used dry. The narrow face of this wheel will not grind as fast as a wide-faced wheel, neither will it generate as much heat, which fact makes the narrow-faced wheel more suitable for dry cutter grinding than the wide-faced wheel. A beveled wheel of the shape shown in Fig. 1 (*f*) is much used for sharpening the teeth of narrow formed cutters, as, for instance, gear-cutters; the grinding is usually done by the inside face, the conical surface *a* just clearing the back of the next tooth of the cutter. A recessed wheel of the form shown in Fig. 1 (*g*) is used for grinding a square shoulder on cylindrical work, and like the cupped wheel illustrated in Fig. 1 (*c*), it can be used for surface grinding on light work, such as the measuring surfaces of caliper gauges. For internal grinding of small holes, the wheel may assume the shape shown in Fig. 1 (*h*).

17. As far as the shape of the face of the wheel is concerned, the wheel may be turned with a diamond tool to almost any form desired. For regular work in automatic grinding machines, the cutting face of the wheel is usually either a flat surface, as the side of a wheel, or the surface of a cylinder. These two elementary forms are modified to suit special conditions.

SPEEDS AND FEEDS.

18. Surface Speed of Grinding Wheel and Work. The relation between the surface speeds of the grinding wheel and the work will become clear when we consider as a parallel case the relation between the cutting speed of a milling cutter and the feed of the work in a milling machine; since the act of revolving a piece of work in the grinding machine may be likened to the feed of the work in a milling machine, while the cutting points of a grinding wheel may be likened to the cutting edges of a milling cutter.

19. Suppose that a milling cutter is cutting steel, running at a surface speed suitable for a proper maintenance of the cutting edges; there is then one particular feed of the work at which the cutter will work at its best, and if this rate of feed is increased too much, the teeth of the cutter will be broken off. If the milling cutter is speeded too high, the heat generated by the cutting operation will be sufficient to draw the temper in the cutting edges, which are rapidly dulled in consequence of the excessive speed. Also, if the milling cutter is speeded to the proper cutting speed while the work is fed so slowly that the cutter may be said only to rub the work instead of taking a distinct chip, its cutting edges will be rapidly dulled.

20. Considering now a grinding wheel, if we revolve it at the proper speed but revolve the work too fast, there will be too much stress upon the cutting points (the particles of the abrasive material), which, consequently, will break away, thereby rapidly changing the diameter of the wheel. This change in diameter will produce a corresponding change

in the diameter of the work. In other words, too great a surface speed of the work reduces the diameter of the wheel too rapidly and thus destroys its sizing power.

21. When the grinding wheel is run at too high a speed while the work is revolving at a proper speed, the wheel will rapidly dull and become glazed on account of the heat generated. In the case of a grinding wheel running at the proper surface speed, but on work that is revolving too slowly, the wheel will dull rapidly because there is not enough stress on the cutting points to break them, and this dulling will be intensified by the heat that is generated. When the wheel is run at too low a speed, the speed of grinding is proportionately reduced.

22. Practice has shown that for the grinding wheel a surface speed of 6,000 feet per minute is suitable for hardened steel, cast iron, and chilled iron. For grinding soft steel and other metals except those named, the grinding wheel may be given a surface speed of 7,000 feet per minute. The average surface speed of the work is 100 feet per minute, but it may be considerably higher under certain conditions. For instance, suppose the operator to have a wheel in his machine that was suitable for a job just finished, but which is a little too hard for the new work. In such a case, provided of course that the difference in the grade of the required wheel and the available wheel is not too great, the operator may, by slowing down the speed of the wheel and increasing the speed of the work, get satisfactory results.

23. Chatter Marks. — It often occurs in machine grinding that the ground surface has a peculiar wavy appearance to which operators have given the name of **chatter marks.** These marks may be due to a number of different causes, each one of which may act by itself or in conjunction with the others. The most common causes are improperly supported work, looseness of the grinding-wheel spindle in its bearings, and too hard a wheel. Work lacking inherent stiffness should be supported by proper steady

rests; a loose grinding-wheel spindle can be cured by tightening the bearings; but a wheel that is too hard is best replaced by a softer one. As a makeshift it is often possible to make a hard wheel cut without chattering by turning down the wheel with a diamond, and so narrowing its cutting surface. If this is done, it must be remembered that the amount of work that can be done per minute is lessened, since the amount of material removed by a grinding wheel depends directly on the width of the cutting surface in contact with the work. From this it follows that a reduction in the width of the wheel calls for a finer feed.

24. In some cases, the ground surface may have a mottled appearance, or it may be full of ridges that are either parallel to the axis of the work or wind around it like a thread. This appearance of the work is due to any one of a number of causes, among which may be mentioned vibration of the piece, too slow or too fast speeds for the wheel or work, centers not in good contact, inequalities in the stock, work not suitably supported, or a glazed wheel. When a wheel is glazed, it is probable that there are one or more spots on the circumference of the wheel that are sharper than the remainder; these sharp spots may be likened to the cutting edges of a milling cutter that has but few teeth. In consequence, the cutting is intermittent, and the ridges, which may be likened to the revolution marks of a milling cutter, appear. The best remedy is to select a softer wheel.

25. Truing the Wheel.—It is essential to good grinding that the grinding wheel should run very true and bear

FIG. 2.

evenly against the work over its entire cutting surface. A diamond tool is absolutely necessary for truing the wheel,

a good form of which tool is shown in Fig. 2. A small diamond *a* is set centrally into the end of a cylindrical rod or shank *b*, to the other end of which is fitted a suitable wooden handle. Sometimes the diamond is set into a rectangular shank, but if this is done, the diamond can be used in only two or four different positions, and hence the round shank is better for general work.

26. There are various ways of applying the diamond-pointed tool to the wheel. Some machines have devices for holding it, but in practice a grinding-machine operator will usually find it more convenient to do the turning by hand, resting the tool on the footstock center and steadying it by bearing against the end of the work, the latter being stationary. While holding the diamond tool steadily in place, the revolving wheel is moved back and forth past the tool, or *vice versa*; with a little care, it is quite easy thus to produce a true running wheel that has a cutting surface parallel to the line of motion.

27. Beginners are very likely to overlook the necessity of having a wheel run exactly true and having it cut evenly throughout its width; if this is not the case, the wheel is very liable to make a cut so rough that a beginner will misjudge the wheel and pronounce it too coarse and unsuitable for the work, while in reality the same wheel if properly trued would produce an even and smooth surface. If the wheel does not cut over its entire surface, i. e., if the cutting surface is not parallel to the line of motion, it is not possible to feed at the proper rate without showing distinct feed-marks in the form of spiral lines running around the work. The beginner is likely to attribute these feed-marks to too rapid a feed, when in reality they are due to an improperly trued wheel.

INFLUENCE OF TEMPERATURE.

28. Local Heating and Its Prevention. — When grinding solids of revolution in a grinding machine, the work and the wheel are often flooded with water for the

purpose of carrying away the heat generated by the grinding operation. The work is thus kept at a temperature that is uniform enough to prevent a sensible change in the outline of the work.

29. Any one who has done lathe work knows how hot the work becomes under the influence of the cutting operation; and as in grinding, the cutting is done much more rapidly, and, besides, by a great number of cutting points, the local heating of the work at the place where the grinding is being done is more pronounced. Now, even if the rise in temperature is so slight that the bare hand cannot detect it, a local heating of any piece of work will cause a change in the outline of the piece that is greater than is ordinarily supposed. This change in outline becomes very apparent in a grinding machine, in which under proper conditions a grinding wheel is capable of showing an error as small as .000005 inch, the error becoming apparent by the increase or diminution of the sparks coming from the wheel when cutting.

30. The influence of local heating on the quality of the work is well shown when an attempt is made to grind dry a slender cylindrical piece of steel between centers. As the grinding passes back and forth over the work, the operator will notice that sometimes the wheel is grinding more on one side of the work than on the other, and at other times, it will grind on one side only. Passing over the work again, the wheel may cut on the opposite side, then it may cut at right angles to where it last cut, and so on. No matter how long the grinding continues, the cylinder will not become round.

31. The following considerations explain why the work does not become round. Suppose we hold a round bar or piece of steel in our hands and press a point about midway between its ends against an emery wheel. Then, the grinding will cause a local heating at the point in contact with the wheel, and, consequently, the side of the bar that is toward the wheel will elongate, thus causing the ends of the

bar to curve away from the wheel. Now assume that the bar of steel is placed between centers in a grinding machine, and that the wheel is again cutting midway between the ends. Then, as in the previous case, the side of the bar in contact with the grinding wheel will elongate, but as the ends cannot curve away from the wheel, since they are held by the centers, the middle of the bar will curve *toward* the wheel. The fact that the bar may be revolving does not alter the case, since the point where the grinding is taking place is always hotter than the opposite side of the bar. If the wheel is passed back and forth over the bar, it is easily seen that the side of the bar where the sparks show will be constantly elongated, and if the piece being ground is entirely free from internal stresses and of absolutely uniform density, it will be ground round, but smallest at the middle. Unfortunately the ideal condition of a piece of work free from internal stresses and of uniform density does not occur in practice; and, in consequence, the elongation of the bar will not be uniform throughout each revolution. Hence the bar will bend a varying amount toward the wheel, and as this is still further varied by the additional heat due to the increased depth of cut, owing to greater elongation at certain points, the result is a bar that is neither round nor straight.

32. The remedy for the troubles due to change of temperature is simple: flood the work with sufficient water to maintain a uniform temperature and use a suitable wheel.

33. Noting the Sparks. — In regard to the sparks being an indication of the grinding, it may be interesting to know that the amount of metal that is removed when sparks are just visible has been ascertained by experiment. A hardened-steel plug gauge about 1 inch in diameter was placed between the centers of a grinding machine and was carefully ground to run true, allowing it to pass back and forth past the wheel until all sparks ceased. Its size was then noted by careful measurement in a standard measuring machine and it was again placed in the machine. The

grinding wheel was now very carefully moved toward the work until sparks just became visible and was then passed back and forth past the wheel until all sparks ceased. By carefully measuring the work again, it was found that the piece had been reduced .00001 inch in diameter, which showed that the depth of the cut was only .000005 inch. This experiment showed that the grinding wheel when used in a good machine is one of the most sensitive indicators of error.

34. When grinding work, the operator can judge the accuracy with which it is being ground by noting the increase or decrease in the volume of the sparks during the revolution of the work, and an experienced operator can closely tell the amount of error from the relation between the depth of cut and the volume of sparks. This relation can only be studied in actual grinding by noting the volume of sparks emanating from a grinding wheel for a given movement of the wheel slide, as indicated by the dial of the adjusting screw. Since the increase or decrease in the volume of the sparks is an indication of error, it follows that an operator having a knowledge of the amount of error thus indicated may eliminate or reduce many errors by making proper adjustments.

GRADUATIONS.

35. Purpose of Graduations.—The success of the grinding machine in grinding solids of revolution accurately to a predetermined shape, as, for instance, true cylinders or frustums of cones, depends largely on the provision of suitable means for adjusting the line of motion of the grinding wheel or the table in relation to the axis of rotation of the work. These provisions are amply made in the better class of grinding machines that are built today.

36. In order to aid the operator in setting the machine to grind cylindrical or tapering work, all modern grinding machines have one end of the table, which, as previously explained, can be swung around in a horizontal plane,

graduated either to degrees or to read to tapers in inches per foot. These graduations are intended to assist the operator in setting the table *approximately* to the correct position; it is to be distinctly understood that for exact grinding, the means of sensitive adjustment with which the table is provided are to be used after it has been determined by *trial* where the ground work differs from the desired shape.

37. Final Adjustment.—When setting the machine, the operator should set the table by the graduations as nearly as can be judged by eye. It is entirely unnecessary to use a magnifying glass for this purpose. The rough work is now placed in the machine and, by measurement, it is determined which end, if either, is the larger. A very light cut is now taken, observing if the cut is heavier at the larger end, which obviously should be the case. If this is not the case, the table is carefully adjusted until the cut shows heavier at the larger end, which is indicated by the sparks. The work is now ground evenly and is then measured, but if one end is too large, the table is adjusted once more; this cycle of operations is repeated until the table is correctly set.

38. The main reason why the graduations cannot and should not be relied on when accurate work is desired is *not* that the graduations are incorrect, but that any changes of temperature of the machine will affect the relative position of the various parts; any error due to this cause will be doubled in the work. Another reason is the unequal wear of the centers that is liable to occur with constant use, the centers wearing out of line; any error in alinement due to this cause will also be doubled. Thus, if one center is .00025 inch out of line in one direction and the other center is the same amount out of line in an opposite direction, the total error in alinement is .0005 inch, and the error of the work will be .001 inch. A slight amount of dirt or oil in the holes in which the centers are placed will cause a corresponding error in alinement.

39. Adjustment of Headstock.—The headstock of a universal grinding machine is generally arranged so that

it can be swiveled; graduations on its base indicate approximately the angle at which the spindle is set to the line of motion; provided, however, that the table itself is set at zero. When grinding work between centers, it is essential to set the headstock to zero; otherwise the graduations on the end of the table will not show the angle between the line of motion and a line joining the centers. When work that is attached to the headstock spindle is ground, the latter is set roughly by the graduations of the headstock, but the final adjustment is gotten by setting the table over.

40. The adjustment of the table is so simple in all grinding machines that in case the work shows any error due to alinement, the operator finds it more convenient to cure the error by shifting the table than to look for the cause of the error in alinement.

DRIVING WORK BETWEEN CENTERS.

41. Work ground between centers is driven, as in lathe work, by a dog. The dog used should be as light as possible, especially for slender work, and should be well balanced in order that the centrifugal force due to an unbalanced dog may not bend the work during grinding and thus cause poor results. Most grinding machines have a pair of pins set into the face plate, so that a straight-tailed dog having two tails can be used, which is less liable to produce a bending stress on the work at high speeds than the ordinary bent-tailed dog. Owing to the fact that the work revolves at a slow speed, it is not often that the centrifugal force due to an unbalanced dog has to be taken into account.

EXTERNAL GRINDING.

METHODS OF GRINDING.

42. Introduction.—A good idea of the kind of work that can be done in a grinding machine can be obtained by an examination of the several examples of **external grinding** that are given below. These examples will serve to

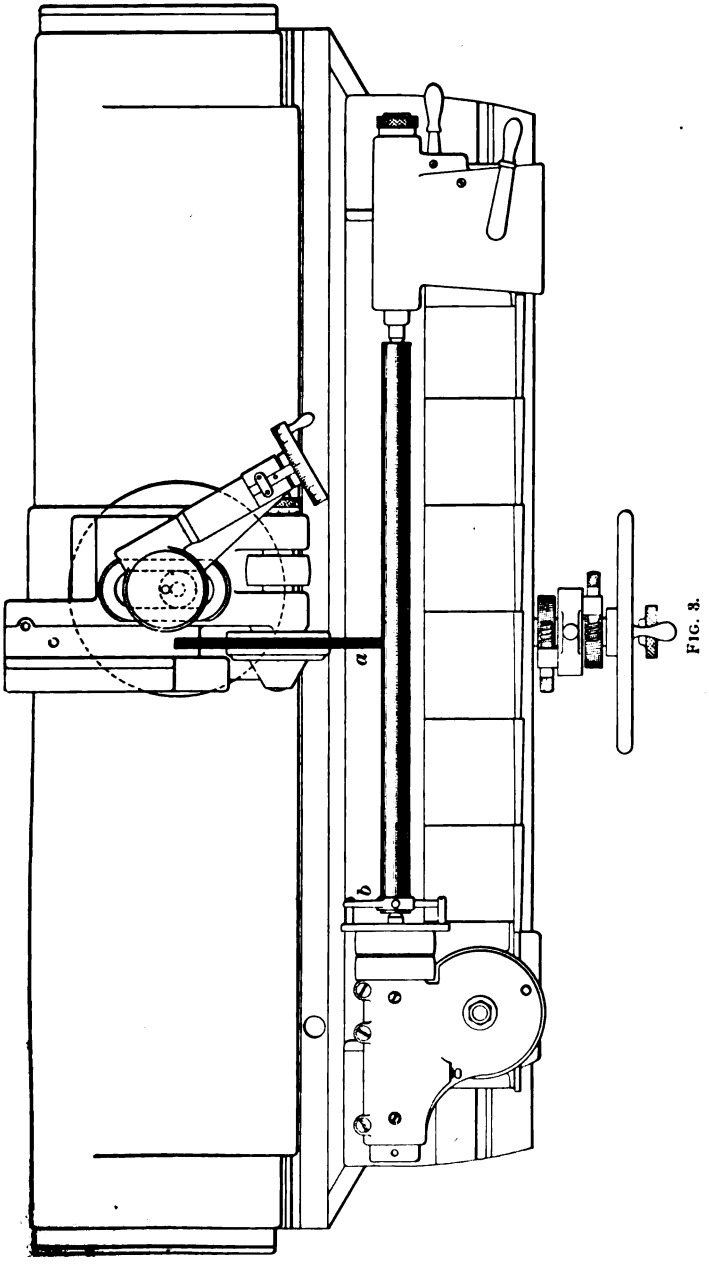

FIG. 3.

show how the machine may be arranged and what shape of wheel may be used to advantage. They may be profitably studied, for the lessons conveyed by them will serve to suggest ways and means of doing work different from that shown.

43. Grinding a Cylindrical Rod.—Fig. 3 shows one of the simplest grinding jobs that is done, which is the grinding of a cylindrical rod between centers. The illustration is a top view of a Landis grinding machine where the table is stationary and the wheel moves past the work. The wheel *a* is set at right angles to the line of motion, so that its cutting surface is cylindrical. In order to grind the work cylindrical, the line of motion of the wheel must be parallel to the axis of rotation of the work, and this condition is obtained by shifting the table until trial shows the work to be cylindrical. The illustration shows the manner of driving the work by means of a dog *b* having two tails that balance each other, though in practice only one of them is in contact with a driving pin. It would be commercially impossible to grind the piece shown without using a number of steady rests, but they are not shown, as they would only complicate the illustration.

44. Facing a Bushing.—In Fig. 4 is shown how a bushing may be faced square. The bushing *c* is placed on

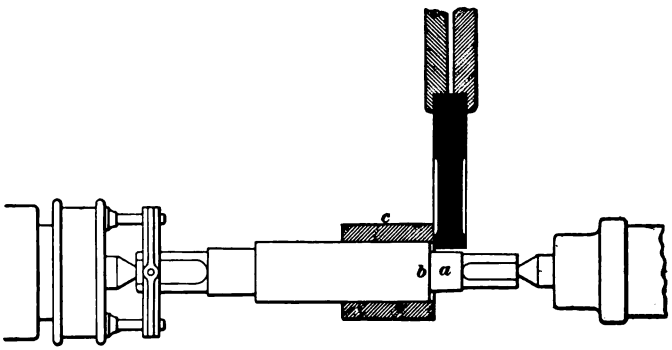

FIG. 4.

a true-running mandrel that is put between the centers and is driven by a dog. In order that the grinding wheel may pass

clear over the end of the bushing, the end *a* of the mandrel should be turned down somewhat smaller than the part fitting the bushing; the latter is then placed on the mandrel

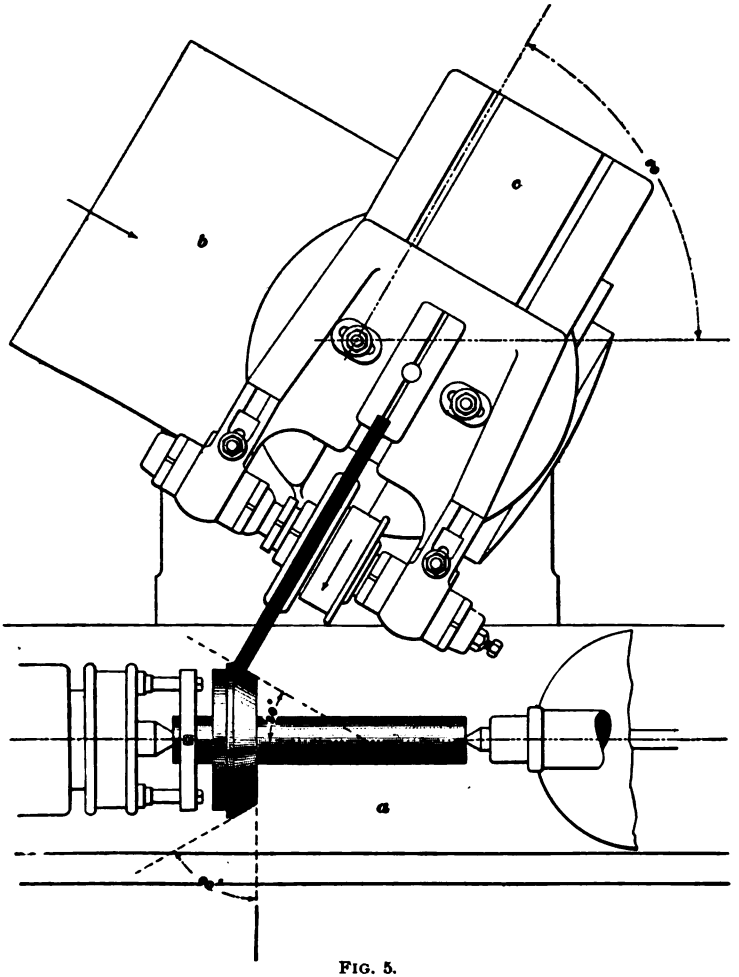

FIG. 5.

so that the face that is to be ground projects somewhat from the shoulder at *b*. Since the grinding must be done by the side of the wheel, the latter should be recessed as shown, leaving only a narrow surface to do the cutting.

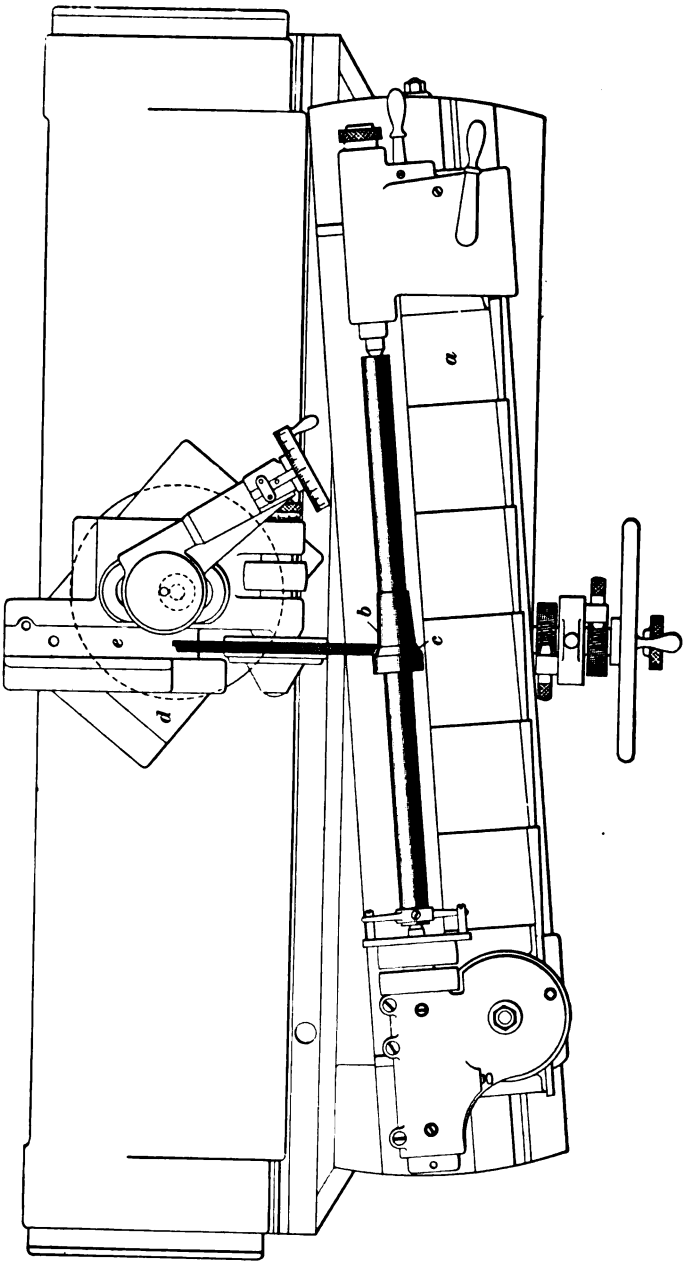

FIG. 6.

The wheel is fed against the face in the direction of the axis of the work; this will generally give a better face than feeding the wheel back and forth across the face of the work.

45. Grinding Conical Work.—The grinding of a short frustum of a cone is shown in Fig. 5, which is a top view of part of a Brown & Sharpe universal machine. The included angle being beyond that attainable by swinging the table *a*, it is gotten by swiveling the lower wheel slide *b* until it makes the required angle to the axis of rotation of the work, the table *a* first having been set to zero, however, in order that the graduations on *b* may give a correct indication. In this case, the upper wheel slide *c* is set at right angles to *b* to allow a square-faced wheel to be used. It will be observed that the slides *b* and *c* form what may be called a compound rest. If the frustum of a cone that is being ground has to be very exact, its accuracy will most likely be tested by a gauge; the final adjustment for the angle is then made by swiveling the table *a* by means of the adjusting screw provided for the purpose.

46. In Fig. 6 is shown how a piece of work having two different conical parts may be ground, where one of the parts is within the range of angles that can be obtained by swiveling the table *a*. Thus, the conical part *b* is ground with the table set over, while the conical part *c* is ground by setting the lower wheel slide *d* to an angle to suit the required angle. It is to be observed that the graduations on *d* will not indicate the angle of *c*, since the table *a* is not at zero. One edge of the grinding wheel is beveled to suit the conical part *c*. The wheel is adjusted for depth of cut by moving it along the upper wheel slide *e*.

When a number of duplicate pieces like that shown in Fig. 6 are to be ground, the sensitive adjustment of the table can only be used for the conical part *b*. The final adjustment for *c* must be gotten by shifting the lower slide *d*. As long a piece as the one shown could not be ground without the use of steady rests.

47. Grinding Close to Shoulder.—An example of grinding a shaft close to a large shoulder is shown in Fig. 7. In this case, the ordinary flat wheel cannot be used, since the nut and the washers used for fastening it to the spindle will come in contact with the shoulder of the work while the wheel is yet some distance from the shoulder. For this

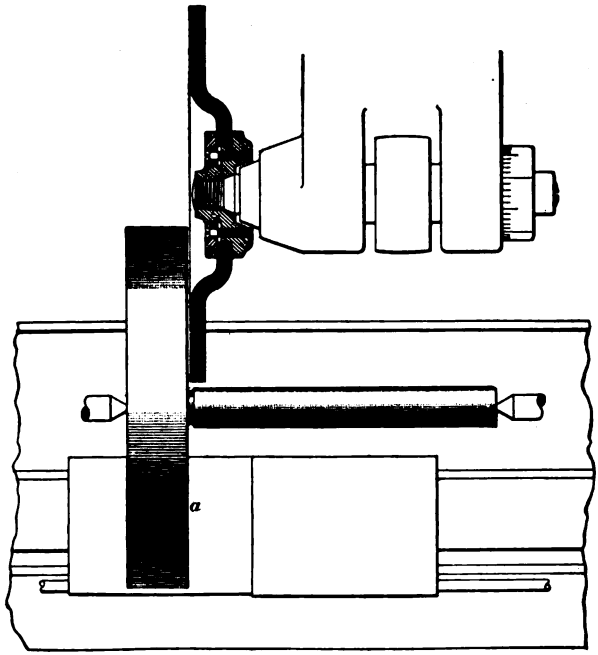

FIG. 7.

reason, the dished wheel shown in the illustration is used. It is not advisable to use such a wheel for grinding the face *a* of the shoulder, owing to the large grinding surface that will be in contact with the work. The wheel cannot clear itself of the particles of metal, and if the shoulder requires grinding, it is better to recess the wheel in order to narrow the grinding surface.

48. Grinding a Caliper Gauge.—The grinding of a caliper gauge is shown in Fig. 8, the illustration being a

partial top view of a Landis grinding machine. The gauge *a* is clamped to the table *b*, which has been set to zero. The wheel slide *c* is set at right angles to the table and a wheel

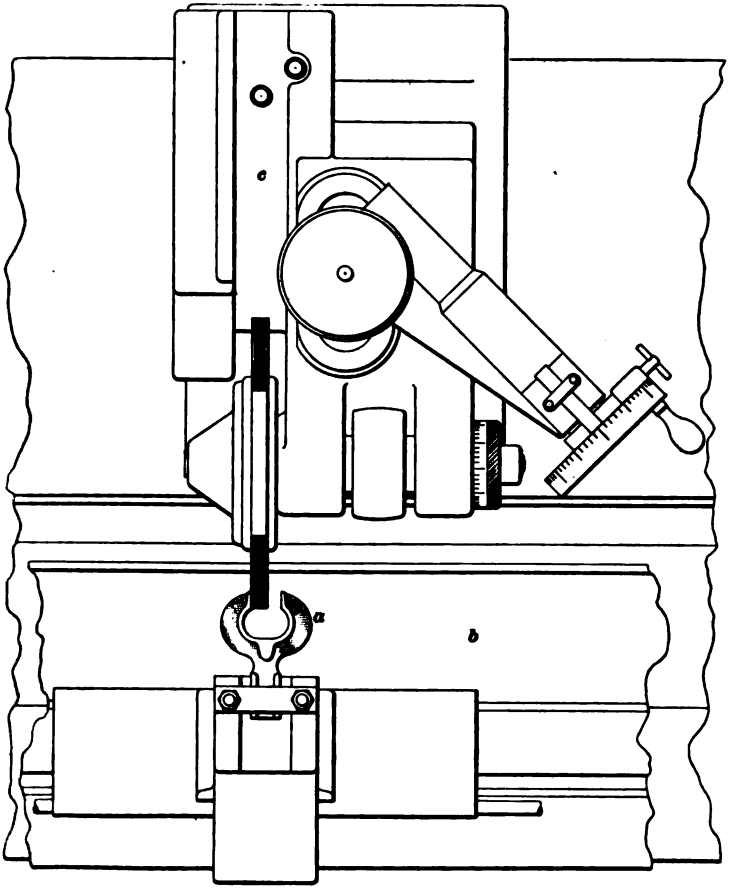

FIG. 8.

recessed as shown is used. The grinding is done by moving the wheel slide rapidly back and forth across the caliper face. A rather soft wheel should be used for this kind of grinding.

It will be noticed that in producing the flat face shown in Fig. 4, the wheel was not moved across the work, while in

the present case it is very necessary to move the wheel across the face of the work. The reason for this is that in the first case the work *c* was revolving, while in Fig. 8 the gauge *a* is standing still.

49. Truing Centers.—Fig. 9 shows how the centers may be trued in a universal grinding machine by swinging the headstock around to make an angle of 30 degrees with the line of motion in order that the centers may be ground

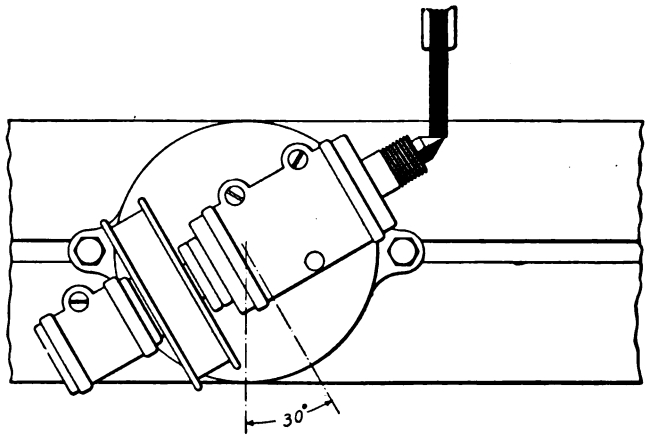

FIG. 9.

to the American standard angle of 60 degrees. In all modern grinding machines, the headstock center and tailstock center interchange, so that both centers may be trued in the headstock spindle. In plain grinding machines, where the headstock cannot be swiveled, the centers are trued by means of a special fixture that is nothing but a supplementary headstock that is removed from the machine after the centers are ground. Obviously the spindle must rotate for center grinding.

50. Chuck Work and Face-Plate Work.—The manner of using a universal grinding machine for chuck work and face-plate work is shown in Fig. 10. When the work is to be ground to a plane surface, the headstock is placed exactly at right angles to the line of motion of the

table or grinding wheel, the table first having been set to zero. The final adjustment is obtained by means of the sensitive adjustment with which the table is supplied, taking trial

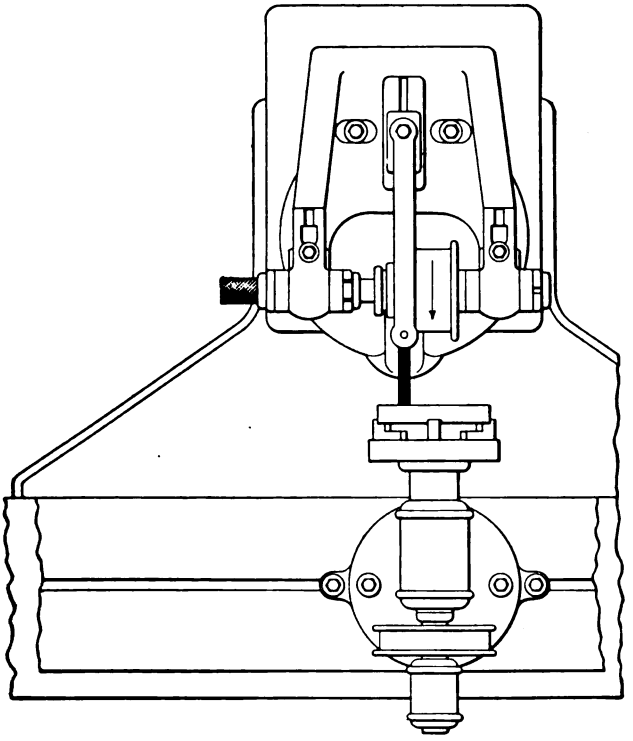

FIG. 10.

cuts over the work and testing it with a straightedge. For conical work the headstock is swiveled to the required angle.

51. Special Chucks.—Thin saws, milling cutters, and similar work that either cannot very readily be held in the chuck or that cannot be attached to a face plate because the clamping devices are in the way of the grinding wheel, can often be successfully held for grinding by means of the special chuck shown in Fig. 11, the use of which presupposes that the work has a fair-sized round hole whose axis is at right angles to the face that is to be ground. A face plate *a*

is screwed to the headstock spindle. A sleeve *b* that is threaded on the inside to fit the screws *c* and *d* is nicely fitted to the central hole of the face plate; this sleeve is axially movable and is kept from turning by a pin that

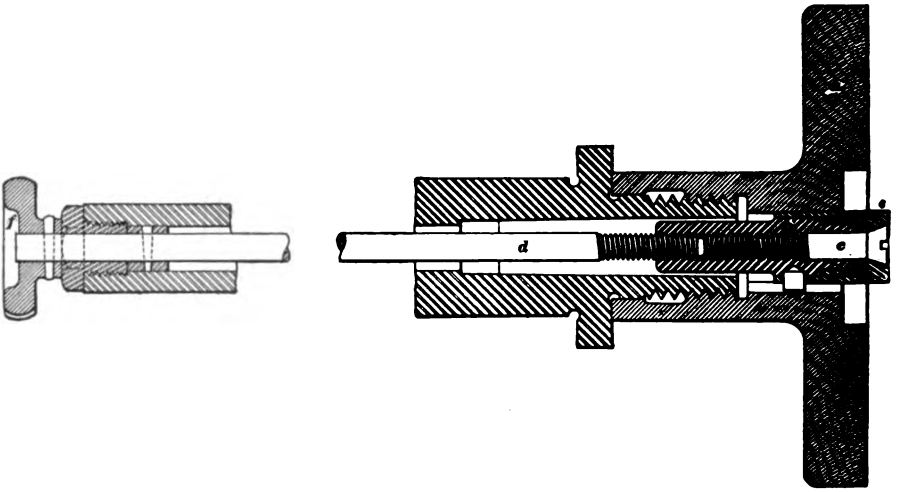

FIG. 11.

works in a longitudinal slot of the face plate. The front end of the sleeve *b* is arranged to take the shank of the bushing *e*, the projecting part of which is fitted to the hole in the work. The bushing *e* is split so that it can be expanded to grip the work tightly by turning the conically headed screw *c*. When this has been done, the work is drawn against the face plate by turning the small hand wheel *f*, which is keyed to the screw *d*. A separate bushing will be required for each size of hole.

THE SET WHEEL.

52. When a large number of duplicate pieces of simple form are to be ground, grinding-machine operators usually employ the so-called **set-wheel method** of grinding. In this method, all the pieces are first roughed out to within a small limit of the finished size, say .001 inch, and then all are finished. In using this method, the operator first sets

the grinding wheel, by trial, to the roughing size, and then, without moving the wheel slide, grinds all the pieces to the roughing size, measuring the work from time to time and moving the wheel toward the work to make up for the wear of the wheel. When all the pieces have been roughed out, the wheel is set, by trial, to grind the work to the finished size and piece after piece is put into the machine and finished without disturbing the setting of the wheel, except to compensate for the wear.

53. For the set-wheel method, a wheel should be selected that will not wear very rapidly; and after all the pieces are roughed out, the wheel should be carefully trued by means of a diamond tool. It will then produce a smooth and even surface on the light finishing cut, although the surfaces produced on the heavy roughing cuts may have been rather coarse.

STEADYING WORK.

54. Purpose of Rests. — When grinding long and comparatively slender work, it is necessary, just as in lathe work, to use some means to prevent the deflection of the work, owing either to its own weight or to the pressure of the cut. For this purpose a follow rest may be used, or a number of steady rests may be applied to the work.

55. Benefits.—The benefits derived from a proper application of rests to the work are: the production of a better quality of work; the possibility of taking heavier cuts and the using of a greater speed and rate of feed; and, finally, an increase in the sizing power of the wheel. The term **sizing power** refers to the ability of the wheel to maintain its size for a fair length of time, which enables it to duplicate a large number of pieces without any movement of the wheel slide.

56. Classification of Rests.—The rapidly increasing use and the consequent development of the grinding machine have led to a great number of designs of rests for the steadying of work while grinding. The different designs

easily divide into two general classes, which may be called *follow rests* and *fixed rests.*

57. A **follow rest** may be defined as a rest that maintains its position in relation to the wheel; i. e., is stationary in respect to it throughout the cut. Such a rest is only adapted to cylindrical work, and for a long time was the only rest supplied to grinding machines.

58. A **fixed rest,** or **back rest,** is a rest that is fastened to the table of the grinding machine, and which, consequently, remains fixed with respect to the work. Such a rest is conceded by most operators to be superior to a follow rest, even for straight work. The fixed rest can also be used on tapered work or work having different diameters. Fixed rests may be divided into two subclasses, which are called *rigid fixed rests* and *flexible fixed rests.*

59. Construction of Rests.—A **rigid fixed rest** is shown in Fig. 12, which also shows its application to the

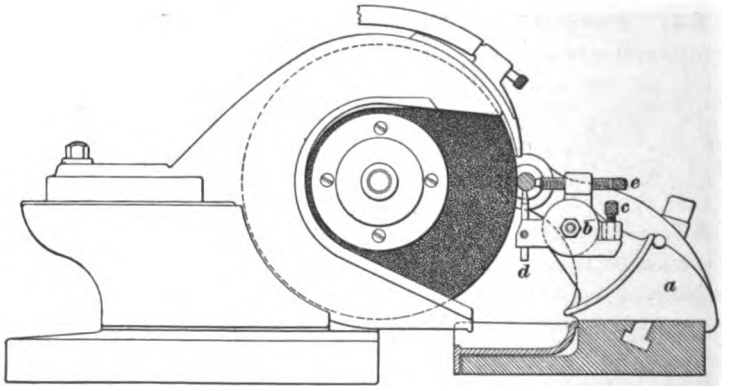

FIG. 12.

work in a Landis machine. The frame *a* of the rest is rigidly bolted to the table; a swinging arm *b* is fulcrumed to the upper part of the frame and can be moved slightly by means of the adjusting screw *c*. An adjustable cylindrical plug *d* is carried by the swinging lever, to which it can be clamped by a setscrew. This plug is placed in contact with

the bottom of the work, the sensitive adjustment being obtained by the screw *c*, and the rough adjustment, for the diameter of the work, by sliding the plug in the lever. A setscrew *e* is used for steadying the work sidewise.

60. When using a rigid rest, it is not necessary for the operator to spot the work at the place where the rest is applied. The rest is simply applied to the work and grinding commenced. The emery wheel will cut more from the high side, even though the rest may appear to hold the work so that it runs true, and the work will finally come out round and straight. Care must be exercised in adjusting the parts of a rigid rest, as *d* and *e*, for a very little pressure will deflect a slender bar, and if the rest is set up too hard the work may be ground small in the middle. As the diameter of the work is reduced, a rigid rest must be readjusted.

61. Flexible fixed rests are made in various ways; the simplest form is the so-called **spring rest** shown in Fig. 13. The frame *a* is fastened to the table of the machine; it has a rectangular recess at the top into which the rectangular shank of the shoe *b* is so fitted as to move easily. The end of the shoe that bears against the work is curved to suit the diameter of it; the rear end of the shoe is acted upon by a helical spring *c* whose tension can be adjusted by means of the thumbscrew *d*. The shoe should be made of some soft material, as brass, babbitt, or wood. This kind of a rest reduces or eliminates the vibration of the work by reason of the inertia of the shoe and the tension of the spring *c*; it is open to the objection, however, that too great a tension of the spring will cause the work to be bent. On the other hand, the spring will cause the shoe to follow up automatically any

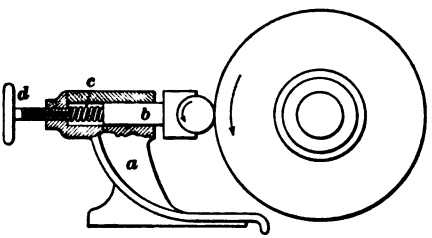

FIG. 13.

reasonable reduction in the diameter of the work. The shoe should never be made of any hard material, as it should wear rapidly to a good fit, on account of the fact that the value of the shoe in absorbing vibrations depends largely on the degree of its contact with the work.

62. The **universal back rest** supplied by the Brown & Sharpe Manufacturing Company with their plain grinding

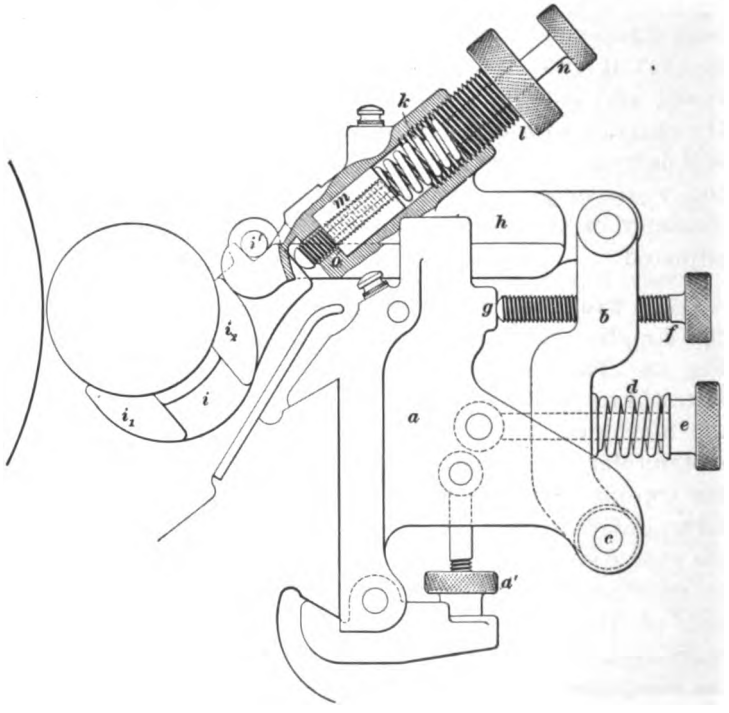

FIG. 14.

machines is shown in Fig. 14. The back rest for the universal machines works on the same principle, but is constructed quite differently. The frame *a* is clamped to the table of the machine by turning the nut *a'*. A swinging lever *b* is pivoted to the frame at *c*; a spring *d*, whose tension can be adjusted by the thumbnut *e*, tends to force the upper end of *b* toward the work. The extent to which the lever

can move toward the work is regulated by the thumbscrew *f*, whose end, by coming in contact with a shoulder *g* of the frame, limits the motion of *b*. The shoe-carrying frame *h* is hinged to the upper end of the lever *b*, and the front end of *h* rests on a part of the frame *a*. This construction allows the frame *h* to move toward the work to the extent permitted by the position of the screw *f*, but does not permit the front end of *h* to drop. The shoe *i* has trunnions, as *i'*, which rest in **V** notches formed at the front end of *h*. The shoe is held against the work by a helical spring *k*, whose tension is adjusted by the thumbnut *l*. The spring *k* bears against the movable nut *m*, which carries the adjusting screw *n*, the end of which bears against the shoe. From the construction it follows that the action of the spring *k* causes a rotation of the shoe *i* about *i'*, thus tending to draw the part i_1 of the shoe against the work. The screw *n* passes through a clearance hole in the thumbnut *l*, and its axial motion under the action of the spring *k* is limited by the lower face of the nut *m* coming against a shoulder *o* of the shoe-carrying frame.

63. From the construction of the device it follows that the part i_2 of the shoe is held against the work by the spring *d*, while i_1 is held against the work by the spring *k*. It also follows from the construction that the pressure of the shoe against the work can be arrested at a predetermined diameter by a proper adjustment of *m* and *f* in respect to the shoulders *g* and *o*. If these adjustments are properly made, it is impossible for the springs to bend the work. Different sizes of shoes will be required for different diameters of the work; since the shoes are removed by simply lifting them out of the **V**'s in the frame *h*, they are readily changed.

64. Since the shoe is operated by spring pressure in two directions at right angles to each other, it can yield to suit the inequalities of unground work, and, hence, there is no necessity of grinding the work to run true at the place where the rest is applied, prior to the application.

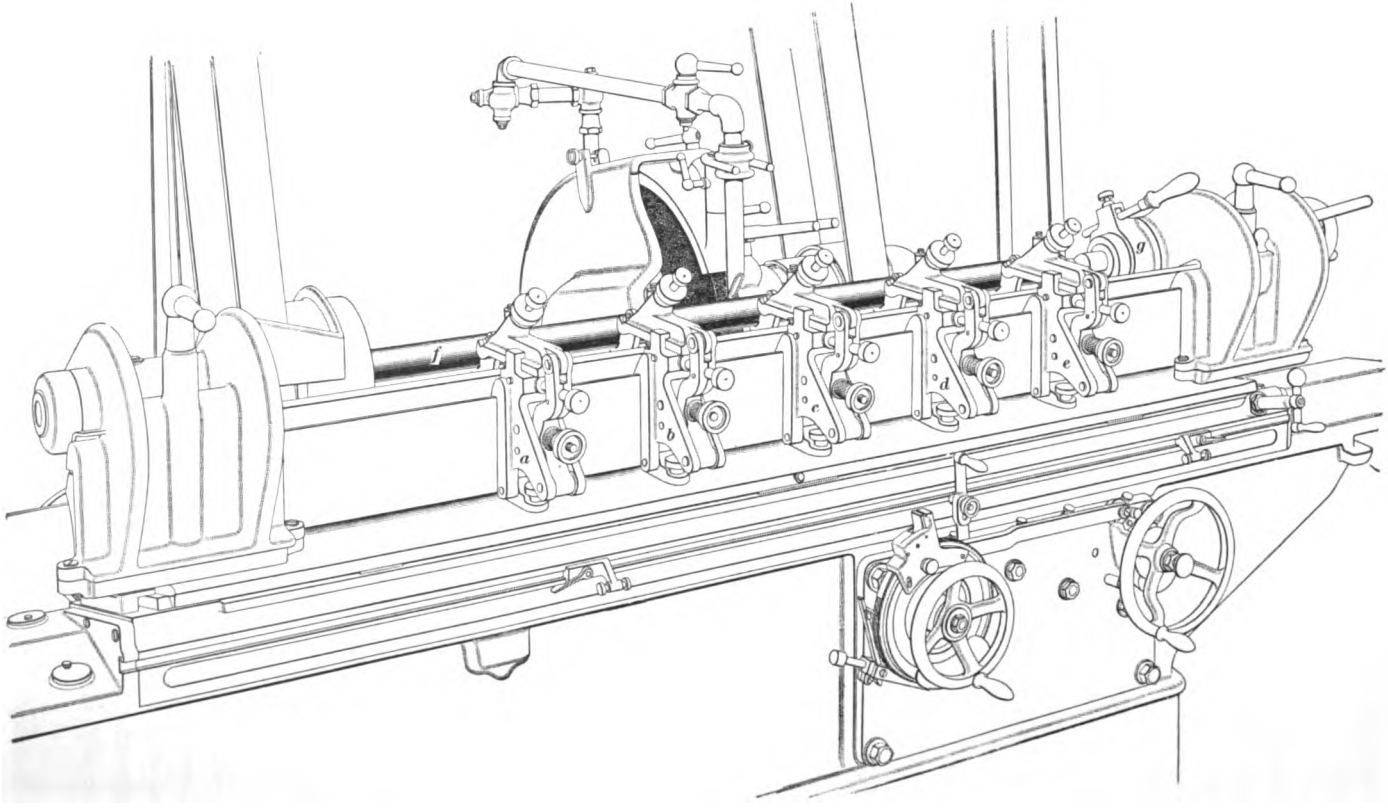

FIG. 15.

65. Application of Universal Rests.—Fig. 15 is a perspective view of a plain grinding machine, showing how the universal rests are applied to a long piece of work. In order to steady the work *f*, a number of rests, as *a*, *b*, *c*, *d*, and *e*, are used, which are placed from 6 to 8 diameters of the work apart. Each rest is independently adjusted to properly bear against the work. This illustration incidentally shows on the footstock a truing device *g* for holding a diamond-pointed tool. As clearly shown, the tool is held in place by a small thumbscrew; in use the depth of cut is obtained by moving the wheel slide, and the grinding wheel is moved back and forth past the tool.

66. Absorption of Vibration.—When comparatively stiff work that is being ground without a rest commences to vibrate, as occurs occasionally, the vibrations can sometimes be absorbed by holding a block of wood against the work by hand, resting one end of the block on the table. This is only a makeshift to be used where single pieces are being ground. In doing commercial work, a rest should always be used. Whenever a piece of work or a wheel commences to vibrate, the cause should be looked up and the proper remedy applied. The vibration may be caused by a glazed wheel, improper speed of wheel or work, or irregularities in the stock.

67. Special Rests.—Where a large number of duplicate pieces are to be ground, special rests can often be advantageously used. These rests must usually be of the fixed-rest type, and may be rigid rests or spring rests. Their design rarely presents any difficulties, as they are generally but simple modifications of the rests here described, the modification having been made necessary by the shape of the work.

POOLE METHOD OF CYLINDRICAL GRINDING.

68. As is well known, a round bar may show under very refined measurements as being exactly round and of uniform diameter, and may yet be far from straight; that

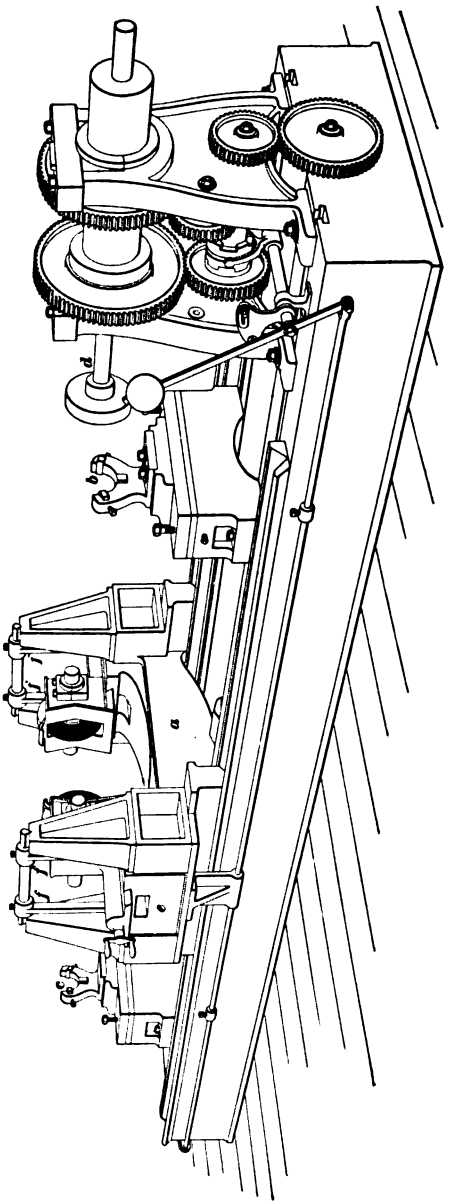

FIG. 16.

is, it may be far from a true cylinder. In all ordinary grinding machines, the straightness of the work depends primarily on the straightness of the guiding ways that determine the line of motion of the wheel or the work, and while the work may be round in spite of a want of truth of the guiding ways, any error in them is bound to produce work that is not straight. While it is not a very difficult matter to produce straight guiding ways in small grinding machines intended for comparatively light work, the problem becomes more difficult when a machine suitable for the grinding of such work as the calender rolls used in paper making is to be constructed. Such rolls are quite large and must be exceedingly straight and uniform in diameter; on account of the difficulty of making the guiding ways sufficiently true, Mr. J. Morton Poole devised a special method of grinding that largely overcomes any reasonable error that would be induced by want of straightness of the guiding ways. In the Poole method of grinding, the periphery of the grinding wheel is kept at a constant distance from the axis of rotation of the work, not by the straightness of the guiding ways, but by gravity, as will become apparent when the construction of the machine is studied.

69. Fig. 16 is a perspective view of the machine, which in some respects resembles a lathe with the tailstock left off. The carriage *a* that carries the grinding wheels is mounted on V's, along which it can be traversed. The roll that is to be finished has its two journals ground perfectly true and these journals are placed in the jaws of the steady rests *b* and *c*. The jaws of these rests are both the same height above the guiding ways. The work is driven from the headstock spindle *d* by means of a flexible connection, in order that any want of alinement between the axes of rotation of the work and the spindle may not disturb the former during grinding. Two grinding wheels are used on opposite sides of the work; each grinding wheel is mounted on its own wheel slide. The two slides work in a heavy casting *e* that forms their base; this casting is supported by four links,

as *f*, *f*, from the top of the carriage by means of knife-edge bearings. This construction allows the grinding wheels to swing freely in a direction at right angles to the axis of rotation of the work, and the wheels will obviously be at rest when the center of gravity of the whole swinging part occupies its lowest position.

70. The distance that the grinding wheels are apart during each cut being constant, it follows that the roll being ground will be of uniform diameter throughout, neglecting here the wear of the grinding wheels which will be exceedingly small during a light finishing cut. Now, as stated in Art. **68,** a bar may be apparently round and of uniform diameter without being straight. Any one who is in doubt about this statement is advised to take a straight piece of drill rod, which, as supplied by manufacturers, is quite round and exceedingly uniform in diameter, and to bend it slightly. It will then be found that with a reasonable amount of bending the piece will caliper the same throughout its length. While there is no doubt but that the diameter and also the roundness of the piece are changed by the bending, the fact remains that the change is so slight, when the bend is not excessive, as to be insensible.

71. Assume that the roll being ground is not exactly straight. Then, when revolved in the steady rests *b* and *c*, it will run out of true, and the high side coming toward one of the emery wheels will tend to push over the swinging frame. This tendency is resisted by the weight of the swinging frame, and, consequently, there is a pressure, dependent on the amount that the roll runs out of true, that causes the wheels to alternately cut away the high side until the center of gravity of the swinging frame is in its lowest position again, when the wheel ceases to cut. It will be understood that the frame swings back and forth as the high side of the revolving roll engages one or the other of the two grinding wheels. By repeated passages of the carriage along the bed, the roll is finally so ground as to run perfectly true; and as the fixed distance between the wheels

insures a uniform diameter, the finished roll becomes a very close approach to a perfect cylinder, independently of the truth of the guiding ways. In practice the operator takes most or all of the swing out of the carriage while roughing the roll. On the whole, this is a rather slow process, though it produces very good work. Some classes of rolls have to be ground large or small in the middle. This may be done by raising or lowering the swinging carriage at the proper points so as to bring the wheels above or below the center of the roll. As quick as the wheels are removed from the center of the work they will grind large.

INTERNAL GRINDING.

INTRODUCTION.

72. Internal grinding presents problems of a practical nature that differ somewhat from those encountered in external grinding; since a knowledge of the causes of these problems is essential to their partial or entire solution, they are here briefly explained.

73. Influence of Pressure.—In internal grinding the truth of the surfaces, at least as far as the grinding itself is concerned, depends primarily on the amount of pressure caused by the grinding operation As in the case of external work, this pressure tends to disturb the position of the axes of rotation of the work and the grinding wheel; since the amount of disturbance depends directly on the pressure, it follows that a reduction of it to the lowest limit attainable with a given set of conditions causes a corresponding reduction of errors and a consequent increase in the truth of the work.

74. Pressure Greater Than in External Grinding. — The pressure required to make the wheel cut is always greater in internal grinding than in external grinding, especially when the hole that is being ground is small. The

reason of this is the more intimate contact of the grinding wheel with the surface of the work; the extent of this contact will become apparent when a grinding wheel but slightly smaller than the hole is employed. It may be stated that for equal depths of cut, equal diameters of wheels, equal diameters of the work, and equal widths of the wheels, the extent of the surface of the wheel in contact with the work will always be greater in internal grinding than in external grinding. This is shown in Fig. 17, where a cylinder *a* and a cylindrical ring *b* having the same diameter of the surface to be ground, are illustrated. The grinding wheels *c* and *d* have the same diameter, and both are set for the same depth of cut. It is plainly seen that the surface with which the wheel is in contact is greatest in internal grinding, and it can be readily understood that the pressure of the cutting operation will be greater than in external grinding. From these facts the conclusion may readily be drawn that in order to reduce the pressure of the cut, the depth should be much less in internal than in external grinding.

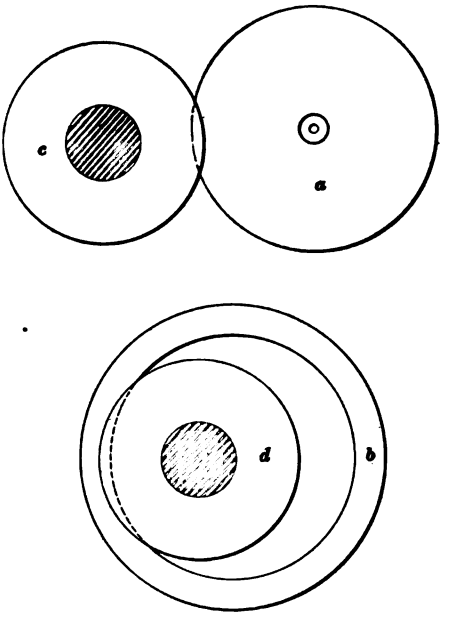

FIG. 17.

75. Best Cutting Speed Cannot Be Obtained.— The grinding wheel obviously must be smaller than the hole in which it is to be used, and a very small hole requires a very small wheel. In order to obtain the best cutting speed, the

wheel would have to be run at a very high number of revolutions per minute. While it has been found possible in practice to run a very small grinding spindle of exquisite workmanship at the enormous rate of 75,000 revolutions per minute, even this high rate of speed falls very much short of giving the best surface speed to the grinding wheel. At present the art of making a spindle and bearings for it to run at the number of revolutions that would produce a proper surface speed has not progressed far enough to allow this to be done, at least for small holes.

76. When a grinding wheel is run at a surface speed below its best cutting speed, more pressure will be required to make it cut, but as the required pressure is less with a soft wheel than with a hard one, it follows that a softer wheel should be used whenever circumstances prevent the attainment of a proper surface speed. Since the condition just named exists usually in internal grinding, it follows that much softer wheels should be used than for external grinding, in order to reduce the pressure.

77. Considerations Affecting Stiffness of Spindle.—In the case of external grinding, the spindle that carries the grinding wheel can always be made as stiff as may be desired; in the case of internal grinding, however, the size of the hole that is to be ground determines the maximum diameter of the spindle. Then, if the hole is small and deep, the spindle must be correspondingly small and slender; consequently, it is bound to yield to a sensible extent under a very moderate pressure. From the statements just made, it will be apparent that in order to reduce the deflection of the spindle, it should be as large as circumstances will permit, and be supported close to the grinding wheel.

78. In the earliest designs of internal-grinding fixtures, a spindle of as large diameter as possible was employed, and the distance from the wheel to the nearest support was at least equal to the depth of hole to be ground. It was soon found, however, that while the requisite stiffness was

obtained, another serious error not previously thought of was introduced. This error was due to the looseness of the spindle in its bearings, which is necessary for free running, but which shows much greater at the end of the spindle by reason of the long distance between the wheel and the nearest bearing. The consequent wabbling of the wheel caused it to follow the imperfections of the hole being ground and precluded the grinding of a true hole.

79. When the spindle is made as large as the hole will permit, it is obviously impossible to place a bearing adjacent to the emery wheel. Hence, in order to place a bearing in that position, the diameter of the spindle must be cut down; and to give the requisite stiffness, the bearing must be of such a form that it will make up for the reduced diameter of the spindle. This consideration requires the bearing to be a cylindrical shell carrying the spindle inside and having its outside diameter slightly smaller than the diameter of the smallest hole in which the internal-grinding fixture is to be used. Then, if the bearing is directly back of the grinding wheel, its possible side movement will exceed but slightly the side movement (the looseness) of the spindle in its bearing.

80. Construction of an Internal-Grinding Fixture.—The Brown & Sharpe Manufacturing Company was

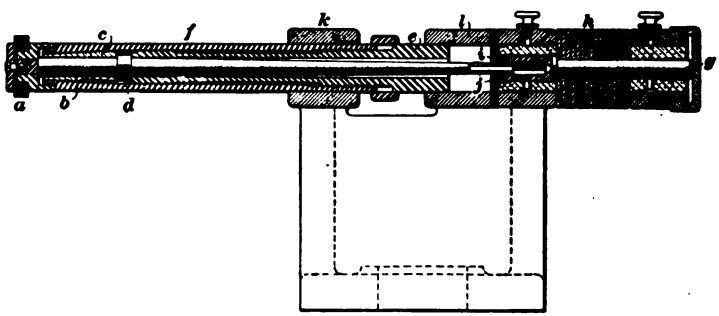

FIG. 18.

the first firm to construct an internal-grinding fixture along the lines mentioned in Art. **79.** This fixture is shown in

section in Fig. 18. The grinding wheel *a* is carried by the spindle *b*, which has a long journal working in a split-bronze bearing *c*. The spindle is held in place lengthwise by the collar *d*, which bears against the end of *c* on one side, and on the other side bears against the end of the tube *e*. The outside of the bearing *c* is tapered and fits the tapering bore of the supporting shell *f*. The wear of the bearing is taken up by screwing the tube *e* into the shell, thus causing the bearing to close. The tube *e* is then slightly unscrewed to give

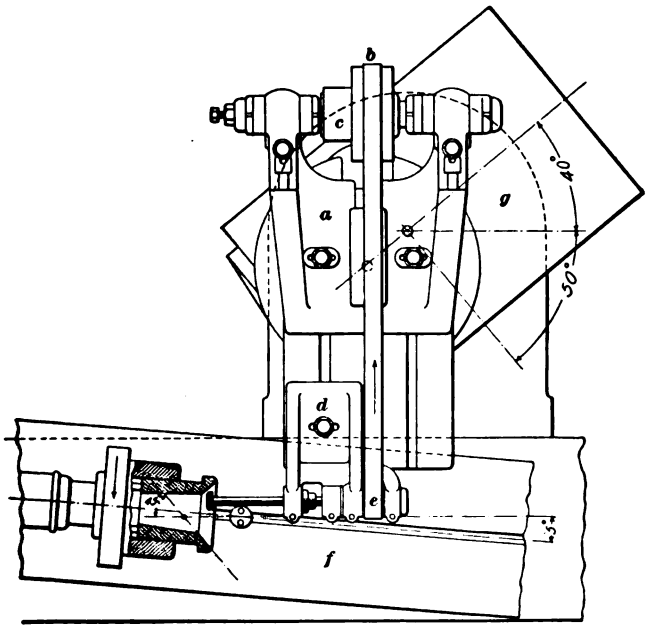

FIG. 19.

the collar *d* a free running fit. The end of the spindle is splined and fits loosely in a central hole of the driving shaft *g*, which carries the driving pulley *h*. Two pins *i* and *j* engage the splined end of the spindle and cause it to turn with the driving shaft. The outer shell *f* and the end of the tube *e* are sliding fits in the bearings *k* and *l*, and *f* can be clamped to *k*. This construction permits the wheel *a* to

be brought somewhat closer to the bearing *k* for shallow holes.

81. Driving the Spindle.—The method of driving the spindle for internal grinding is shown in Fig. 19. The grinding wheel is removed from the wheel stand *a* and a driving pulley *b* is put in its place. The wheel stand *a* is then reversed, so that it occupies the position shown in the illustration. The pulley *c* is now belted to the drum overhead. The internal-grinding fixture *d* is bolted to the wheel slide; its spindle is then driven by belting its driving pulley *e* to the pulley *b*.

METHODS OF GRINDING.

82. Grinding Conical Work.—Fig. 19 shows how the universal machine is used for grinding a hole having a double taper; i. e., whose surfaces form frustums of two different cones. The table *f* is swung around to grind the smaller taper, and the wheel slide *g* is set over in order to grind the larger taper.

When the machine has a swivel headstock, one taper might be ground by setting over the headstock, leaving the table at zero. The other taper is then ground by setting over the wheel slide, or changing the setting of the headstock.

83. Fig. 20 shows how a tapering hole in the end of a spindle may be ground to run true with the outside. One end of the spindle is held in the independent jaw chuck *a*, while the other end is run in the center rest *b*. For testing the truth of the end of the spindle that is held in the chuck, a sensitive indicator should be used, the operator revolving the headstock spindle by hand and truing the work until the indicator shows it to run dead true. The center rest insures that the other end of the spindle runs true. The proper taper is obtained by setting over the table. When adjusting the center rest, great care must be taken that the work is not thrown out of alinement with the

axis of rotation of the headstock spindle, for if this is done, the jaws of the chuck will badly mar the end of the work, and besides the work is likely to creep slowly forwards in the direction of its length during the grinding. The jaws of

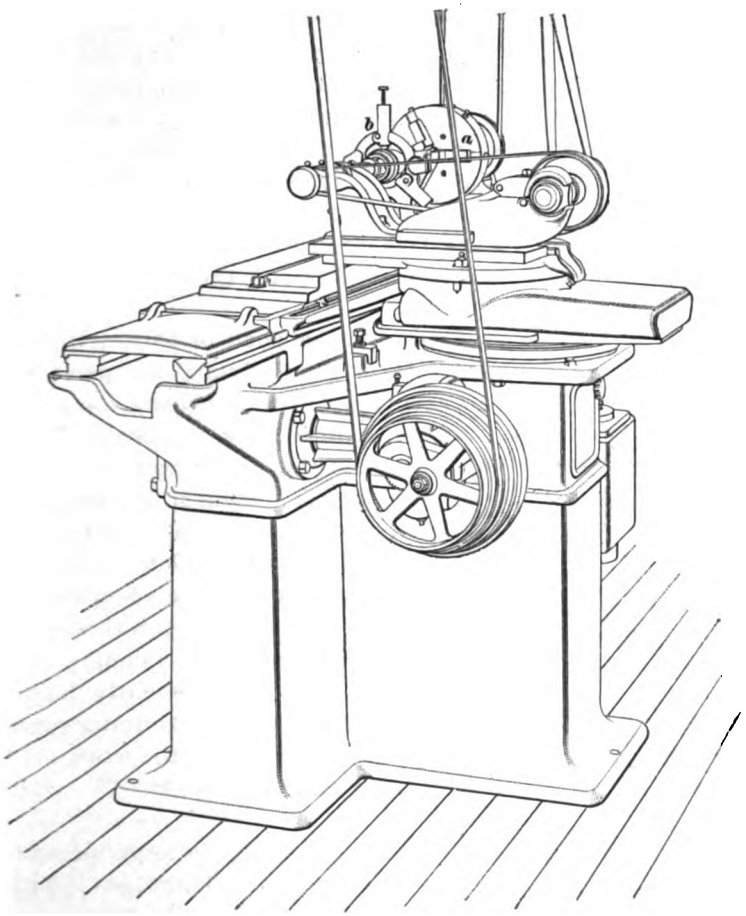

FIG. 20.

the center rest should touch the outside of the work just enough to prevent any shaking. If they are set up too tight, the work will heat very rapidly, and since it expands

with the heat, it will cause a still greater pressure on the ends of the jaws, which may score the work.

84. Chucks.—Universal chucks are not to be recommended for grinding machines, because they will not hold the work true enough for the purpose. Independent jaw chucks are preferable in every respect, since they not only allow the work to be trued carefully, but, also, frequently permit hardened work having a small grinding allowance to be trued to suit the warping induced by the hardening process. If such work is held in a universal chuck, it will often be impossible to finish it to size with the given grinding allowance, owing to the lack of truth in the chuck itself and the inability to true the work to suit the warping.

85. It sometimes occurs that a shell or thin cylinder cannot be trued sufficiently in the ordinary independent jaw chuck. In that case a so-called **bell chuck** may be used. This form has the advantage over the jawed chuck in that it allows both ends of the work to be trued independently of each other. Such a chuck is shown in perspective in Fig. 21. Its rear end *a* is threaded to fit the headstock spindle; the body *b* is bored sufficiently large and deep to freely admit the work, and eight thumbscrews that are placed as shown are used for holding the work and adjusting it so that it will run true.

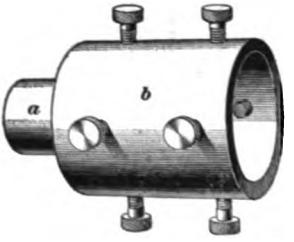

FIG. 21.

86. For special work that is to be done in large quantities, special chucks may be made to advantage. The general form of such chucks is about the same as those used for screw-machine work and turret-lathe work. It is probable that many forms of work made of iron and soft steel and that are held by ordinary chucks at present will in the future be held by magnetic chucks. These magnetic chucks

not only hold the work securely, but are not so liable to bend or spring the work as the present methods of clamping.

87. Face-Plate Work.—For the internal grinding of work whose form requires it to be held on a face plate, the work is held by the same clamping devices used in lathe work; these are applied in the same manner as in lathe work, and the truing is performed in the same way. It must always be remembered, however, that grinding is a very refined process of finishing the work, and that great care should be taken not to bend the work by clamping.

SURFACE GRINDING.

88. Grinding on Planer. — The grinding of plane surfaces was formerly done, and is yet largely done, on an ordinary planer, which is temporarily converted into a surface-grinding machine by mounting an emery wheel on the cross-rail and providing an overhead drum for driving it. With a planer in good condition, very good work can be done in this manner.

Regular surface-grinding machines are now made; in general appearance and in their manner of operation they greatly resemble the ordinary metal planer, and, in fact, may be said to occupy the same state at present with respect to the planer that the first grinding machine for solids of revolution occupied with respect to the lathe.

89. Present State of Art.—The art of surface grinding has not at present reached the high state of perfection as has the grinding of solids of revolution; and while it is a refined process of finishing surfaces, it is not capable of competing with planing in the removal of metal. As far as hardened work is concerned, it is the only practical method of producing plane surfaces in a reasonable time. For the most refined work, the grinding would be followed by lapping, just as with solids of revolution.

90. Surface-Grinding Machine.—Fig. 22 shows a surface-grinding machine made by the Brown & Sharpe Manufacturing Company. The illustration will show its general resemblance to the planer, from which it differs only

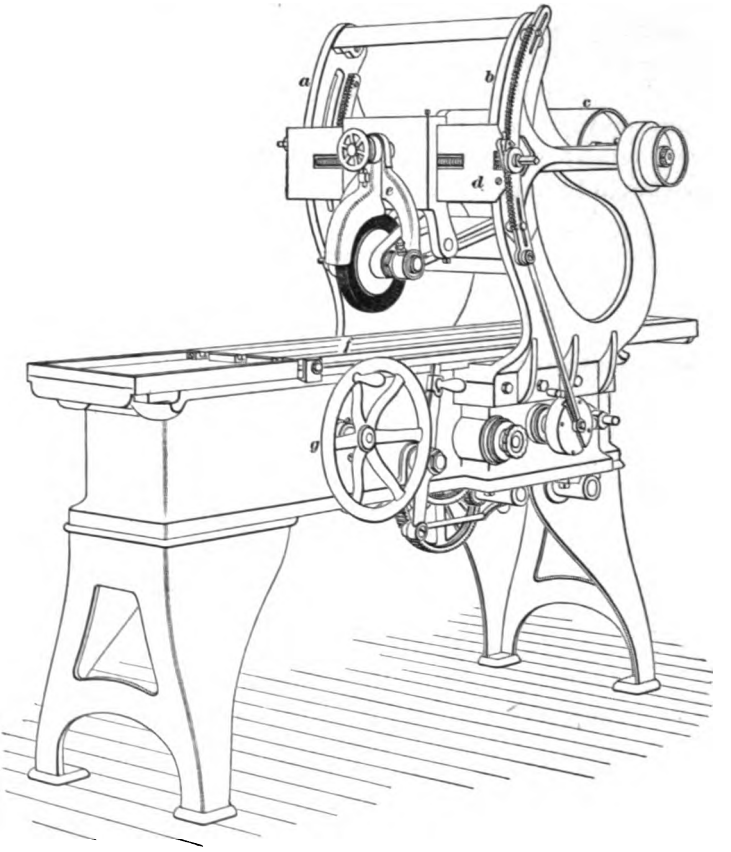

FIG. 22.

in the curved housings *a* and *b*. The face of these housings is an arc of a circle struck from the center of the driving drum *c*; from this it follows that the tension of the wheel driving belt will remain constant throughout the whole range of movement of the crosshead *d*. The crosshead slide carries the wheel head *e*, which can be automatically fed

across the machine. The table *f* is arranged to be traversed by hand by means of the hand wheel *g*, but it may also be automatically traversed. The stroke of the table is adjustable for length and position by means of tappets that operate a suitable clutch mechanism. Surface-grinding machines of the type shown in Fig. 22 are at present adapted only for grinding surfaces parallel to the surface of the table.

91. Selection of Wheels.—The wheels for surface grinding should always be softer than those used for grinding solids of revolution in order to reduce the pressure of the cutting operation and the consequent generation of heat. In surface grinding only one side of the work is operated upon, and, consequently, the work, with any increase in the temperature, will rise up in the center. Since surface-grinding machines for fine work are not at present constructed to use water, it is necessary to keep the generation of heat down by a proper selection of grinding wheel, and thus prevent too serious a change in the shape of the work.

92. Holding the Work.—The work is held to the table of a surface-grinding machine by the same holding devices and in the same manner as is done in planer, shaper, and milling-machine work. For many kinds of work, the magnetic chuck may be used successfully.

CUTTER AND REAMER GRINDING.

PURPOSE OF TOOL GRINDING.

93. When making milling cutters and reamers, it is necessary to grind them so as to give them true cutting edges. It is also necessary to grind such tools when they become dull to maintain them in the best serviceable condition. The condition of all cutting tools should be watched carefully, because when a tool or cutter begins to get dull, if it is not immediately sharpened it soon becomes worse, and requires more power to drive it. Furthermore, the

increased friction produces sufficient heat to seriously affect the temper of the tool.

Most tools when but slightly dulled may be ground many times without injury either to their form or temper. This is especially true of the formed cutters, of which the gear-cutter is perhaps the most common type. These cutters may be ground on the faces of the teeth, as long as the teeth last, without changing their form; and if kept in good condition, a very slight grinding is sufficient to sharpen the cutter; but, if the cutter is kept at work when dull, the formed surfaces become worn back from the cutting edge, thus necessitating the removal of $\frac{1}{32}$ inch or more from the faces of the teeth in order to sharpen them.

THE MACHINE.

94. Cutter and reamer grinding is usually done on specially designed machines, but it may be done on the universal grinding machine. Several of these cutter grinders have most of the movements of the universal grinding machine; such cutter grinders will then serve for a large variety of small work that is generally done in the universal grinding machine. The essential features of a cutter grinder are a spindle carrying a small emery wheel that may be revolved at from 2,500 to 5,000 revolutions per minute, and suitable holders and guides for holding and guiding the tools in the correct position. A small table, or rest, is usually provided in front of the wheel on which flat or formed cutters may be held while being ground.

95. The machine shown in Fig. 23 is a cutter and reamer grinder made by the Norton Emery Wheel Company, and arranged only for the sharpening of milling cutters and reamers. This machine consists of a column *a* that carries the wheel stand *b*; this is arranged in such a manner that it can be swiveled. A graduated saddle *c* is placed on top of the column; this saddle carries the slide *d* in which the table *e* works. The table can be moved toward or away

from the grinding wheel by means of a feed-screw that is operated by the hand wheel *f*. The table can be swiveled horizontally, the saddle *c* having graduations that show the

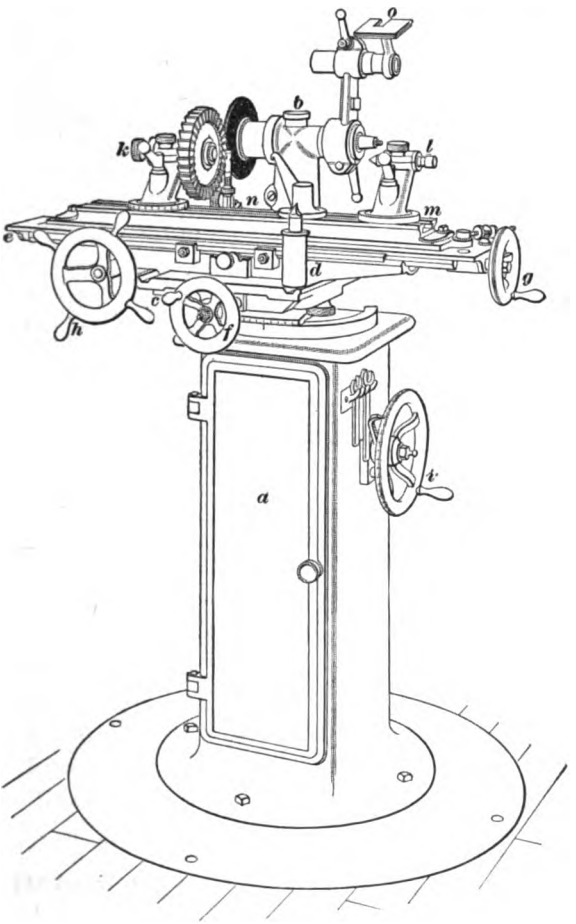

FIG. 23.

angle between its line of motion and the axis of rotation of the spindle. A feed-screw that works in a split nut and is operated by the hand wheel *g* is used for traversing the table; when the split nut is unlocked from the feed-screw, the table can be traversed rapidly by means of the pilot

wheel *h*. The height of the emery wheel above the table can be adjusted by means of the hand wheel *i*. A headstock *k* and a footstock *l* are provided for grinding work between centers. The headstock and footstock are attached to an auxiliary swivel table *m*, which is placed on top of the regular table *e*; this adapts the machine for taper work to be done between centers. An adjustable standard *n* for a guide finger is provided; this finger prevents rotation of the cutter or reamer that is being ground. A small rest *o* is intended for the grinding of formed cutters, which are laid on the rest and presented to the grinding wheel by hand.

96. If a driving pulley is fitted to the headstock, the machine may be used for grinding small cylindrical and taper work between centers, and by the aid of proper attachments chuck work and internal grinding of a light kind may be done. Since the wheel stand may be swiveled to bring the wheel over the table, the machine may be used for light surface grinding.

97. Cutter and reamer grinding machines are made in different ways by the various manufacturers, but most of them embody the same features and differ only in the design of the details. The illustrations and examples of cutter and reamer grinding that are given in the following articles do not refer to any particular make of machine, but have been selected entirely for the sake of the principle involved in each operation. This fact is mentioned here in order that the reader may not think that the illustrations and explanations given refer to the machine shown in Fig. 23.

EXAMPLES OF CUTTER AND REAMER GRINDING.

GRINDING CYLINDRICAL CUTTERS.

98. Cutter Bar.—Fig. 24 is an example of grinding a cylindrical milling cutter in a machine somewhat different from that shown in Fig. 23. In the illustration, which is a top view, the emery wheel *a* is shown mounted on the

spindle *b*; beneath the emery wheel is a guide finger *c*. Clamps *d*, *d* hold a cutter rod or bar *e* on which the cutter *f* is mounted. A helical groove is sometimes cut in the cutter bar *e*, so that any particles of emery that may collect on the bar will be brushed into the groove by the backward and forward movement of the cutter. Since the size of the holes in milling cutters varies with their diameter, it follows that some provision must be made for grinding all sizes of cutters

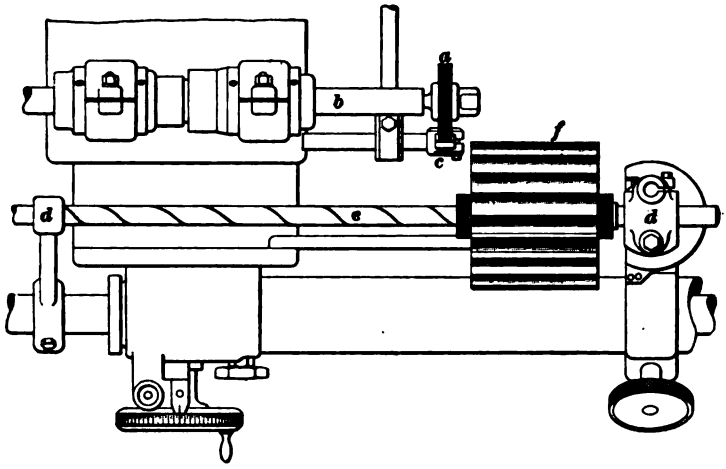

FIG. 24.

within the capacity of the machine. This is done either by making a suitable bar for each size of hole or by making bushings for the larger sizes of holes, so that cutters having large holes may be ground on the small bar. Some cutters and shell reamers have taper holes in them; these must be provided with a bushing having a straight hole fitting the bar, the outside being fitted to the taper hole in the cutter or reamer. When this bushing is in place in the cutter, the latter may be ground the same as any cutter having a straight hole.

99. Form and Position of Guide Finger. — The cutter having been mounted on a suitable bar, the guide

finger *a* is adjusted under one of the teeth, as shown in Fig. 25, so that the grinding wheel is in contact with the back of the land of the tooth. This guide finger should be somewhat wider than the face of the grinding wheel, in order that the cutter may rest on the finger before it

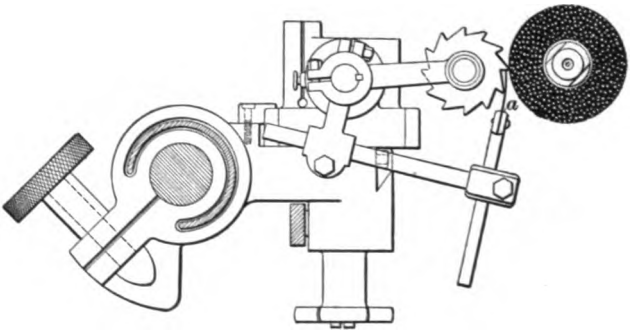

FIG. 25.

reaches and after it leaves the grinding wheel. If the finger is narrower than the face of the wheel, the latter is liable to catch and score the cutter while the latter is engaging or leaving the wheel. The guide finger should always have its top filed so that it is in contact throughout its width with the face of the tooth.

100. Precautions. — Cylindrical cutters, no matter whether their teeth are straight or helical, are ground by moving them past the face of the grinding wheel. The latter should always revolve in such a direction that it tends to press the tooth that is being ground against the guide finger. The teeth are then ground one by one, preferably by light cuts, going several times around the cutter to sharpen it. In order that the cutter may last well, it is essential that the temper should not be drawn from the teeth, or as the shopman expresses it, "the cutting edges must not be burned." Since cutter-grinding machines are not arranged to permit the flooding of the work with water, it follows that overheating can only be prevented by taking light cuts.

101. Cutters ground by sliding them along a cylindrical bar become cylindrical themselves on account of the fact that the distance between the axes of rotation of the grinding wheel and the cutter remains constant at the point where the grinding is taking place, irrespective of whether the two axes are parallel or inclined with respect to each other. The grinding wheel retaining its size, it follows that all points of all teeth of the cutter will be the same distance from its axis; that is, they will be on the surface of a cylinder.

GRINDING SHANK CUTTERS AND ANGULAR CUTTERS.

102. Some cutters, especially those having shanks, cannot be ground on a bar in the manner just described; such cutters are mounted in a suitable socket and ground cylindrical, or to a given angle, by adjusting, by trial, the device in which they are mounted. Angular cutters cannot be ground by sliding them along a bar, and the same device used for shank cutters may be used for them. Thus, the cutter may be mounted on a bar held in a swivel head *a*, Fig. 26, which is set, by trial or by graduations, to the required angle. The guide finger having been adjusted, the cutter is traversed past the face of the grinding wheel by moving the table *b* to which the holding device is attached.

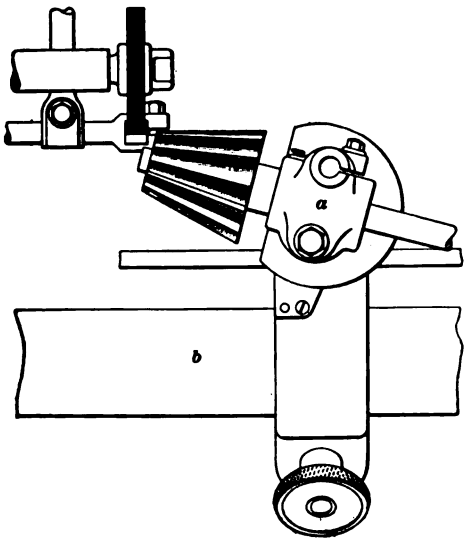

FIG. 26.

REAMER GRINDING.

103. Cylindrical and taper shell reamers may be ground in the same manner as milling cutters, sliding them along a bar if the reamer is cylindrical, and using a holding device if the reamer is tapering. In most cases it will be necessary to make a bushing for cylindrical shell reamers, since they usually have a tapering hole.

104. Reamers that may be classified under the general heading of solid reamers generally have a center at each

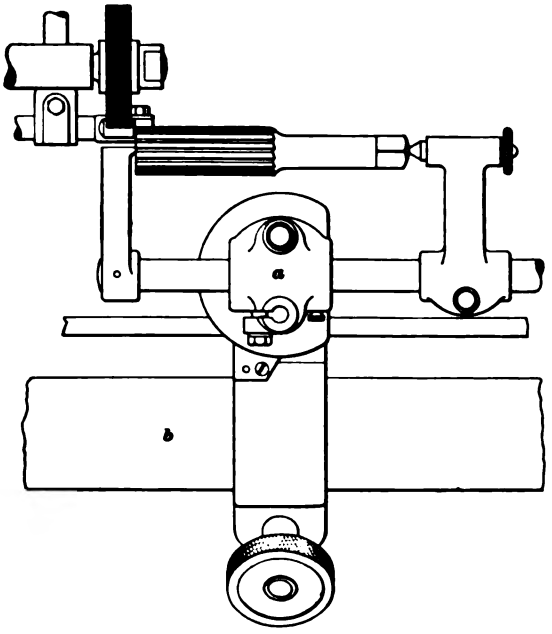

FIG. 27.

end. Such reamers are ground between centers, as is shown in Fig. 27. For grinding cylindrical reamers, the centers are adjusted so that the line joining them, which is also the axis of the reamer, is parallel to the line of motion of the centers; for taper reamers, the axis of the reamer is set at the required angle to the line of motion. In this particular case, the centers are clamped not directly to the table, as in

the cutter grinder that was illustrated in Fig. 23, but to a holding device *a*, which in turn is clamped to the table *b*. The grinding is done by traversing the table *b*, resting the different teeth in succession on the guide finger.

GRINDING TEETH OF SIDE MILLING CUTTERS.

105. For grinding the teeth on the side of side milling cutters, the cutter must be attached to the headstock by means of a suitable socket or arbor, as shown in Fig. 28, where *a* is a holding device or headstock. It will rarely be possible, for want of room, to apply the guide finger to the side tooth that is being ground; in most cases the finger will have to be applied to the periphery of the cutter. It must not be forgotten that the guide finger must be placed in such a position that the pressure of the cut will be against it; this requires the finger to be placed in an opposite position whenever the cutter is reversed after grinding one side. In Fig. 28 this fact is indicated by showing the new position of the finger and the grinding wheel in dotted lines. If the cutting edges of the side teeth are to lie in a plane, the holding device *a* must be swiveled to secure this condition.

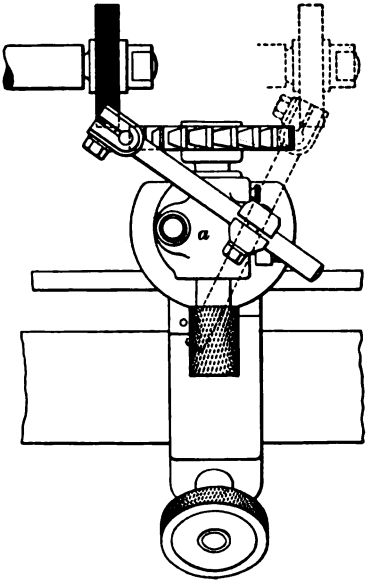

FIG. 28.

USE OF CUP WHEEL.

106. For some kinds of tool grinding and cutter grinding, a cup wheel may be used to advantage. An example showing how the cup wheel is applied is given in Fig. 29,

where an inserted-blade side milling cutter *a* is seen mounted on an arbor held in an adjustable holder *b*. The holder is made adjustable in a vertical direction, in order that the axis of the cutter may be inclined, in respect to the axis of rotation of the grinding wheel *d*, until the desired degree of clearance is obtained. If the guide finger *c* is used on the side of the cutter, as shown, it will be necessary to clamp

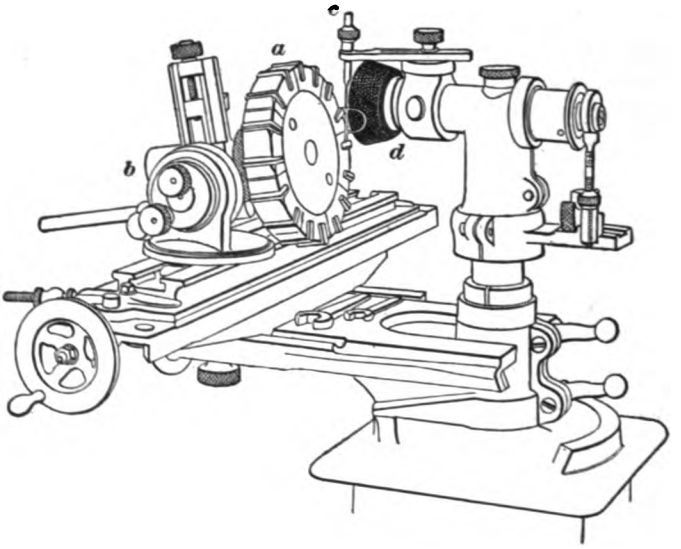

FIG. 29.

the cutter while grinding each tooth as the work passes off from the guide finger or tooth rest before cutting begins. The tooth rest acts as a spring pawl when revolving the cutter. The loop at the back of the tooth rest is for the insertion of the thumb of the operator when it is desired to spring the rest back to clear the teeth. The benefit to be derived from the use of a cup wheel is the well-supported cutting edge that is given to the cutter. The teeth on the side of the cutter can be ground so that their cutting edges lie in a plane, or they can be ground so that their inside corners have a slight relief, by a proper horizontal adjustment of the holder. If the holder can be swiveled sufficiently,

angular cutters may be ground with a cup wheel. The depth of cut is regulated by feeding the cutter toward the wheel, and the grinding is done by traversing the cutter past the wheel.

USING UNIVERSAL GRINDING MACHINE.

107. Introduction.—When no cutter grinder is available, the universal grinding machine may be used for cutter and reamer grinding; and, in many cases, it may also be used for work beyond the range of the cutter grinder.

108. Grinding a Milling Cutter. — Fig. 30 shows how a side milling cutter may have the teeth on its periphery

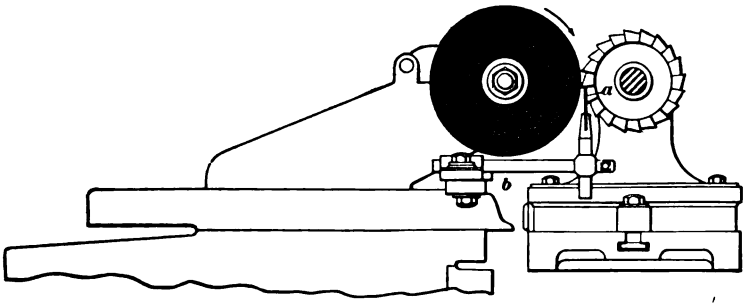

FIG. 30.

sharpened in the universal grinding machine. A guide finger *a* is fastened to a suitable bar *b*. This finger should always be so arranged as to be at rest with respect to the grinding wheel; that is, its position with respect to the grinding wheel should not change. When the guide finger is attached to the wheel base, it occupies a fixed position in front of the wheel, and every part of the tooth that is being ground must travel over it and pass the wheel in exactly the same relative position. This insures that the backing-off is at an angle that is constant throughout the length of each tooth and is the same for all teeth.

109. Mounting Guide Fingers. — Sometimes the guide finger is mounted on the machine table, as shown

in Fig. 31, in which case it travels with the work. This will answer for grinding short work, such as milling cutters less than 1 inch thick and having straight teeth. It is clear that with the guide finger located on the table, it is at rest

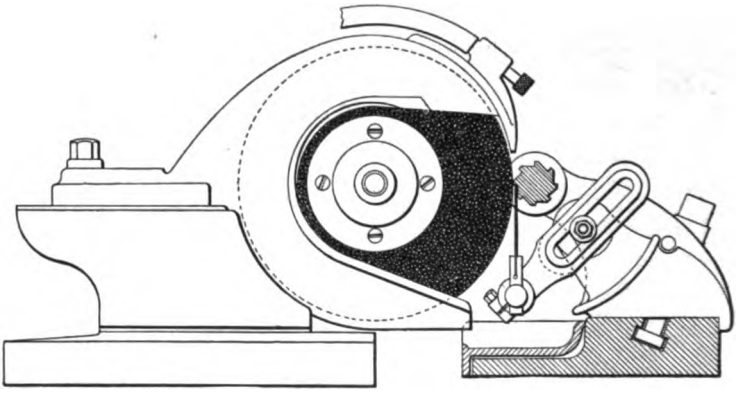

FIG. 31.

with respect to the work throughout the grinding; consequently, it cannot rotate the work, as is absolutely required in the case of tools with helical cutting edges, in order to present every point of each cutting edge to the grinding wheel in exactly the same manner.

110. A beginner is very likely to think that a long cutting tool with straight cutting edges may satisfactorily be ground with the guide finger fixed with respect to the work. This would be the case if there was no warping of the tool in hardening; but after the tool has been hardened, it will be found that no matter how true the grooves were milled, and no matter how carefully the hardening was done, they will have become warped enough to prevent proper sharpening. This can readily be seen if the tool is first ground to run true, grinding it as if it were a cylinder or a cone. Then, adjusting the guide finger so as to keep the backing-off slightly away from the cutting edge and taking the cut, it will be found that the land remaining between the cutting edge and the termination of the backing-off is not equal in width throughout the length of the tooth; this shows that

if the backing-off had been carried clear to the cutting edge, the latter would not be true throughout its length.

111. Location of Guide Finger.—The guide finger should always be so located that the grinding wheel will revolve *toward* it, and should always be placed *between* the axes of the grinding wheel and the work, and just as close to the edge that is being ground as circumstances will permit. It should always be applied to the *face* of the tooth, and never to the back, for the reason that any want of truth of the back will affect the truth of the cutting edge. The mistake of placing the guide finger so that the grinding wheel runs away from it must be guarded against, on account of the liability of spoiling the work caused by the tendency of the wheel to rotate the latter.

DIFFERENT FORMS AND METHODS OF BACKING-OFF.

112. Cutter and reamer teeth are backed off in a variety of ways. For some classes of work and in the absence of the proper facilities for grinding, the tool is turned to the exact size and fluted, after which it is backed off by filing the proper clearance on the teeth. The cutter or tool is then hardened and is perhaps ground by hand on a suitable emery wheel in order to produce a good cutting edge and a clean surface by which to draw the temper. Work done in this manner will prove entirely satisfactory for a large variety of comparatively rough work.

113. Several methods of backing-off are used, each having its special advantage or use, which will be explained together with the manner of the production of each one. The teeth of cutters and reamers are left by the machining process somewhat in the form shown in Fig. 32, which is exaggerated for the sake of clearness. In Fig. 32 (*a*), a section of a tooth is shown in which *a* is the face, and the land *b* is an arc of the circle forming the circumference of the cutter or tool. With the tooth in this shape, it is of little value as a cutting tool, and can do but very poor work until the

land is given proper clearance. The most common form of clearance is shown in Fig. 32 (*b*). An emery wheel is set so as to grind the back *c'* of the land away, and the work and grinding wheel are brought together until the edge *c* is sharp. Obviously, the land will be ground hollow, as shown

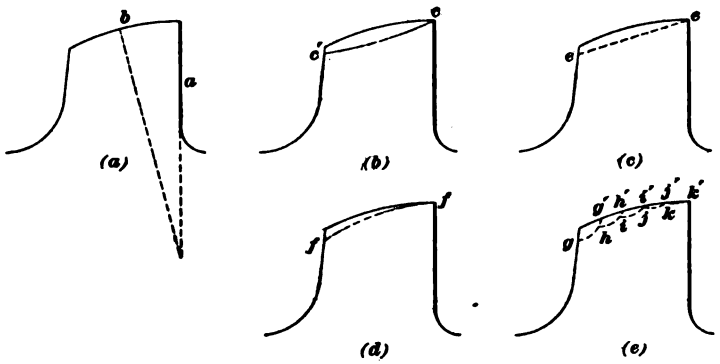

FIG. 32.

by the dotted line *c' c*. In order to leave a well-supported cutting edge, the curvature should be as small as possible; this means that as large an emery wheel as possible should be used. The amount that the edge *c'* is nearer the axis of the tool than the cutting edge *c* is regulated by adjusting the height of the guide finger.

114. A better form of backing-off is the straight backing-off shown in Fig. 32 (*c*) by the dotted line *e c*. This form can be satisfactorily produced only by a cup wheel. Attempts are occasionally made to use an ordinary wheel cutting on its periphery for a straight backing-off, setting the machine so that the axis of the wheel is at right angles to the axis of the tool. Such an attempt will result in unsatisfactory work owing to the wear of the emery wheel, and the method is not to be recommended.

115. It is conceded that the best form of backing-off is as shown in Fig. 32 (*d*) by the dotted line *f f*, which is the arc of a circle. Unfortunately this form of backing-off cannot be produced in the ordinary cutter grinder or

universal grinding machine, but requires a machine somewhat similar to that used for making formed cutters. The advantages of this form of backing-off are a well-supported cutting edge combined with ample clearance.

116. In the absence of a special machine, a fair approximation to the circular backing-off may be given to a reamer as follows: Set the guide finger so low that the wheel will only touch the back of the tooth, grinding it from g to g', Fig. 32 (c), and take this cut over all the teeth. Then slightly raise the guide finger and move the work and wheel apart; now again bring the work toward the wheel until it cuts from h to h'. Continue this cycle of operations until the edge k' is reached. The top of the land will be a succession of ridges that may be smoothed down by careful oilstoning to a very good imitation of the backing-off that a special machine will produce. The method just explained is not recommended for any other cutting tools than reamers. In practice the form of tooth shown in Fig. 32 (b) is generally used.

SHARPENING FORMED CUTTERS.

117. Fig. 33 shows the method of grinding a formed gear-cutter. The cutter is mounted on a stud a in such a manner that the axis of rotation of the grinding wheel b is in the plane midway between the sides of the cutter. A guide finger c is set against the back of the teeth and is so adjusted as to make the face of the teeth radial. The slide on which the stud is carried may be pushed in or out by hand while the table remains stationary.

When formed cutters are ground by hand, a rest is placed in front of the wheel and the cutter laid upon this rest. The cutter is then pushed and pulled back and forth while the face of the tooth is held against the grinding wheel. The rest is often dispensed with in grinding formed cutters; considerable care will then be required to grind the faces of the teeth at right angles to the sides of the cutter. Long

formed cutters may be mounted on a bar and moved back and forth along this bar until the guide finger is in contact

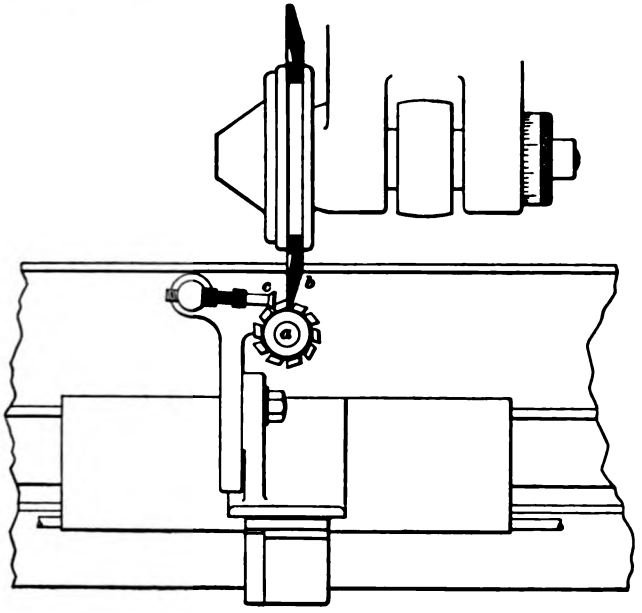

FIG. 33.

with the back of the tooth. The wheel used should be of the dished type; that is, it should be as shown in Fig. 33.

CLEARANCE.

118. Various workmen differ greatly as to the proper clearance for different cutting tools, but the following is probably good average practice. The teeth of milling cutters should be so ground for iron and steel that they will have about 3 degrees clearance. Less clearance is apt to make them drag and cut slowly, and more will make them chatter. Cutters intended for soft metals need a greater clearance. The amount of clearance that the teeth of cutters and reamers should have is easily determined by putting the tool into a ring of corresponding size and looking through

it toward the light. The angle of clearance of any cutter may be found by setting one blade of a universal bevel to the face of the tooth and the other to the clearance; the bevel may then be laid upon a piece of paper and the angle included in the gauge may be extended and measured by any form of protractor.

GRINDING CUTTERS IN PLACE.

119. Large milling cutters are often ground while on their own arbors and in the milling machine, using a special grinding device for the purpose. This is done for two reasons: in the first place, their size prevents them from being ground in a cutter grinder; in the second place, grinding them on their own arbor insures that they will run true.

LAPPING.

DEFINITION AND PURPOSE.

120. **Lapping** is an abrading process in which the abrading material, as emery, is embedded in some soft metal, as cast iron, brass, or lead. It is an extension of the grinding process and is aptly said to be the refinement of grinding. In this process, the results depend largely on the skill of the operator, and bear about the same relation to the finishing of ground work that scraping bears to the final finishing of planed surfaces. The lapping process may be used for finishing the surfaces of unhardened metal where great accuracy is required; it is more frequently used, however, for the final finishing of hardened work.

THE TOOLS.

121. The **tools** used for lapping are quite simple. For lapping holes the simplest lap is made of lead that is cast around an iron or steel arbor, which arbor may be made of

square material, or it may be round and have a groove running lengthwise, in order that the lead will turn with the arbor. A more elaborate form of lap that is intended for cylindrical holes is made of cast iron in the form of a split shell that is placed on a tapering arbor and caused to turn with it by means of a dowel-pin. By driving the shell farther up the arbor, it is slightly expanded. Brass is a very good material of which to construct a lap; it is rather expensive, however. Machinery steel is often used, but it cannot be said to make as good a lap as cast iron or lead on account of the difficulty of embedding the grinding material in it.

USING A LAP.

122. Internal Lapping. — In use, a lap is charged with emery and oil and is then rapidly passed back and forth across the work, or *vice versa*. If the lap is intended for a cylindrical hole, it must obviously be slightly smaller than the hole in order that it may enter when charged with emery, but if a true hole is desired, the lap must be as large as can be worked in the hole. For finishing laps on fine work no allowance is made for the cutting material when making the lap. When a lap ceases to cut, it must be expanded or a new one made. When the lap is made of lead, it can often be expanded by driving the arbor home a little, holding the lap in one hand. The lead, being soft, will stretch quite easily. It will be found, however, that after a lead lap has been expanded two or three times in this manner, its surface will be uneven; a new lap must then be made. It will be understood that the work or the lap must rotate at a fairly high speed during the lapping process. While the lapping can be done in a grinding machine, it is usually more convenient to use a hand lathe.

123. Grade of Emery.—The grade of emery that is to be used depends on the amount of stock that is to be removed and the degree of finish that is desired. Thus, for the finest finish, like that given to cylindrical standard

gauges, the very finest of flour emery must be used; if the lapping process is used to rough down a piece of work because no grinding machine is available, a coarse grade of emery may be used. In order that the lap may work well, it is essential to supply it with plenty of oil.

124. Lapping a Conical Hole.—A conical hole is rather difficult to lap smooth, because the lap cannot be drawn back and forth across the surface. Because of this fact, the lap is very liable to cut concentric ridges into the work; furthermore, the grinding material is likely to creep toward the larger end of the lap, by reason of the action of the centrifugal force due to the rapid rotation of the lap. This will cause the lap to grind the hole to a different taper than that given to the lap; but this tendency can be counteracted somewhat by cutting into the lap a spiral groove having a direction of rotation opposite to that of the lap. Thus, if the taper lap shown in Fig. 34 (*a*) turns in the

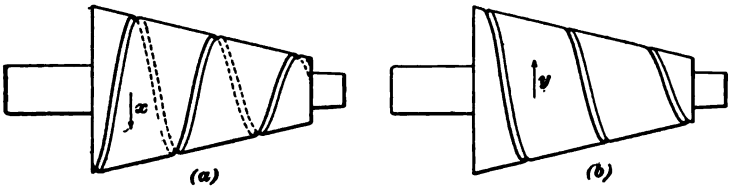

FIG. 34.

direction of the arrow *x*, the groove should be left-handed, but if it turns as shown by the arrow *y* in Fig. 34 (*b*), the groove should be right-handed. Several laps will have to be used to lap the hole smooth and especial attention must be paid to the prevention of glazing. In lapping conical holes, much finer emery should be used than for cylindrical lapping.

125. External Lapping.—An external lap is usually made in the form of a ring that is lined with lead, brass, or cast iron. The length of the lap should be not less than 1 diameter for a cylinder, and can profitably be more. The ring may be split and a screw provided for closing in

the lap when it has become so worn that it will not cut. When much external lapping is to be done, the ring may be provided with a handle about 15 inches long for the sake of convenience in using it.

126. Lapping Odd Shapes.—Odd shapes are sometimes lapped to bring them to the required degree of truth and finish. Work having an odd shape is made as nearly perfect as possible by machining; a lap is then made by casting lead on the part to be finished. Laps of this kind cannot be moved back and forth to prevent their cutting rings into the work. For this reason the same precautions should be taken that were mentioned in connection with laps for taper work.

127. Lapping Holes of Milling Cutters.—While the hole of a solid milling cutter can best be finished by grinding it in a regular grinding machine, there are many places where, on account of the absence of such a machine, grinding is impossible. Lapping may then be used. A lap that is small enough to enter the hole is placed between the centers of a hand lathe and, after coating the lap with oil and emery, the cutter is placed on it. It is not advisable to attempt to hold the cutter with the bare hand on account of the danger of an accident; a strip of pine board may be used to advantage in rotating the cutter, using it in the same manner as you would a file. While the lap is rotating, the cutter should be moved back and forth from one end of the lap to the other until the lap ceases to cut. A new lap is then made or the old one expanded, and the lapping continued until the hole is of the correct size.

128. Lapping Valve Seats of Piston Valves.—The valve seats for the piston valves used in some makes of steam engines for the distribution of the steam must be truly cylindrical and very smooth in order that the leakage of steam and the wear may be reduced to the lowest limit. In some cases these seats are finished by first grinding or reaming them when they are in place in the steam chest, and then lapping them in order to obtain a very

fine and smooth surface. The lap may be made of any suitable material; after being charged with flour emery it is pushed back and forth through the valve seats, being rotated alternately to the right and left, until it ceases to cut. A slightly larger lap is then introduced, and the operation of lapping is repeated until the seats are truly cylindrical and smooth. It is essential that the lap itself should be as near cylindrical as it can be made. The number of laps that will be required for each pair of valve seats depends on the condition and alinement of the two seats.

129. Lapping Plane Surfaces. — The lap may be made of any suitable material, though cast iron is thought to be the most satisfactory. The face of the lap is planed as true as possible and covered with oil and emery, after which the work is rubbed over it, changing the work around frequently and rubbing it in all directions. Great care is required to prevent crowning the work, that is, lapping the edges away faster than the center. The lap must be planed off frequently, as it wears out of true quite rapidly.

130. When the work is of such a nature that it is easily tipped by being moved about, it should be placed in a holder of some kind that will prevent this. Thus, suppose that the rectangular bar shown in Fig. 35 (*a*) is to be lapped on the ends so that they are at right angles to the surfaces *a* and *b*, and, consequently, parallel. A block may then be made with a V groove planed in one surface at right angles to the bottom surface, as shown in Fig. 35 (*b*). The work is placed into this groove, and, if small, may be held there by having a few rubber bands placed over it. The holder and the work are then rubbed over the lap. It

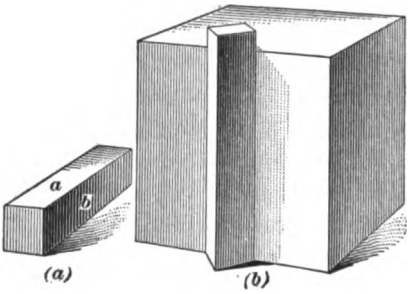

FIG. 35.

is seen that the holder insures the lapping of the ends of the work at the proper angle, and at the same time prevents the work from being tipped.

131. Lapping Circular Arcs.—It is sometimes necessary to lap an arc of a circle to an exact radius. This can be done by a cylindrical lap having a corresponding diameter. The lap may be held between the centers of a lathe, where it is driven by a dog. An angle plate may then be clamped to the slide rest, and the work may either be held by hand or be clamped against the angle plate. While the work is pressed against the revolving lap, the slide rest is moved rapidly back and forth. The action of the lap in this case may be likened to that of an emery wheel grinding a concave surface into the end of a piece that is held stationary on the rest of a grinding machine.

132. Lapping Diamond Tools.—While the use of diamonds for taking light finishing cuts on metals, both in turning and boring, is not general, there are still quite a number of shops in which diamond tools are used for finishing duplicate work. The diamond is used chiefly because its hardness prevents a rapid wear; then, as the expense of sharpening tools is thus greatly reduced, it will be found that on many classes of light work the diamond tool, in spite of its great first cost, will prove much more economical than steel tools. Diamond tools are not adapted for heavy cuts, being too brittle to stand much pressure; they answer admirably, however, for very light finishing cuts, and as they hold their edge well and permit a much greater cutting speed to be used than will a steel tool, they tend to increase the output of the machine.

133. For this work the **black diamond** and the **bort** are the kinds usually used, though sometimes white diamonds are used. The stone is set into a hole drilled in an iron or steel holder, and is lightly held by peening the metal toward the stone. The holder, with the diamond on top, is then sometimes put into a fire and the stone is securely brazed in, leaving but a small part projecting from

the holder. In other cases the diamond is fastened without brazing, the metal being carefully peened about the stone. After the surplus metal has been filed away, a proper cutting edge is ground on the diamond. For this purpose a cast-iron or machinery-steel wheel about $\frac{3}{16}$ inch wide and 6 inches diameter, running about 1,000 revolutions per minute, is used. The periphery of this wheel is charged with diamond dust, which is either rolled in with a small roller or hammered in with a small hammer. The grinding, or lapping, as many call it, is then done by using the wheel in the same manner as an emery wheel is used, the diamond being lightly held against the wheel. Owing to the hardness of the diamond, the process of lapping it to the required shape is naturally a slow one.

BENCH, VISE, AND FLOOR WORK.

(PART 1.)

INTRODUCTION.

1. The machine-shop operations considered up to the present time have been almost entirely associated with machine tools. Aside from these, there is a large amount of work done by hand, such as laying out, chipping, filing, scraping, fitting, etc. These operations are usually performed either on a bench or on the floor, depending on the size or weight of the work; hence, the name *bench, vise, and floor work.*

Bench work is of a lighter nature than floor work, though it may, and often does, include the entire finishing and erecting process where the machine is small; and in the case of large work many of the small parts are assembled at the bench and are then taken to the floor and adjusted to the other parts.

Floor work includes the erecting and assembling of heavy machines and the machining of parts too heavy or too large to be operated on in the stationary machine tools. In the latter case the heavy parts are set up at a convenient place on the floor and the machining done by means of portable tools set up at a suitable location for each operation. Under this heading the tools and processes employed will be considered, as well as the work itself.

Copyright, 1901, by THE COLLIERY ENGINEER COMPANY.
Entered at Stationers' Hall, London.
All rights reserved.

BENCH WORK AND LAYING OUT.

TOOLS AND FIXTURES EMPLOYED.

TOOLS.

2. Hardened Squares.—Squares are made in several styles and for a variety of uses, some of which are illustrated and discussed. The **hardened-steel squares** made by several manufacturers are the most accurate and reliable that can be produced. Sizes up to 24 inches are made in the form shown in Fig. 1 (*a*); in larger sizes the blade is

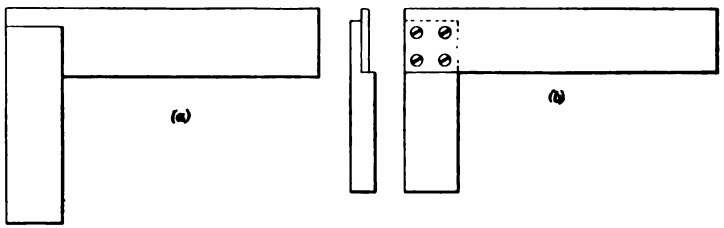

FIG. 1.

sometimes attached with screws, as shown in Fig. 1 (*b*). Hardened squares are made in various sizes from 1½ inches to 24 inches or over, the size being measured on the inside of the blade. These squares are used only for testing right angles, and are not graduated.

3. Graduated Square.—A form of square similar to the above, graduated on the back edge, but not hardened, is known as the **graduated square.** It is an excellent substitute for the hardened instrument, especially on the laying-out table.

The well-known carpenter's square, which is of the graduated type, is used for a large variety of work in the machine shop. For many ordinary uses it answers the purpose perfectly, but it is not of the right form nor of sufficient accuracy for the best grades of work.

4. Adjustable Square. — The **adjustable square** illustrated in Fig. 2 forms a combination having many useful applications. The blade *a* is held in the stock *b* by means of a hook clamp that enters the groove *c* in the blade, and is tightened by means of the nut *d*. The groove *c* runs the full length of the blade, so that the stock may be set at any point throughout its length. A special bevel blade *e*, with

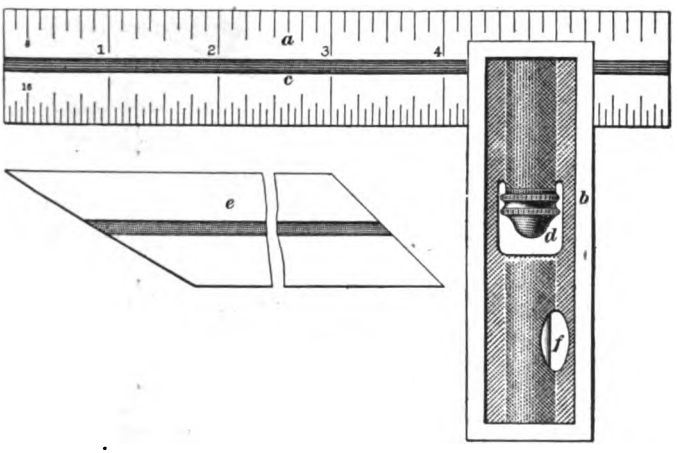

FIG. 2.

a 45° angle at one end and a 30° angle at the other, may be substituted for the graduated blade whenever these angles are to be laid off or tested. This blade provides the angles required in laying out either a hexagon or an octagon. The stock is also provided with a level at *f* that may be used in testing either a vertical or a horizontal surface.

It should be borne in mind that a square is perfect only when the blade and beam are exactly at right angles to each other, and that a fall or any careless use is liable to destroy its accuracy.

5. Bevel Protractor.—The square is useful to determine a right angle, but it is often necessary to measure and test other than right angles. The **universal bevel protractor,** which is illustrated in Fig. 3, is an instrument

designed for this purpose. It consists of a stock *a* having a graduated circle *b* and an arm *c* held to the rotating disk *d* by the thumbnut and clamp *e*. The disk *d* rotates upon a

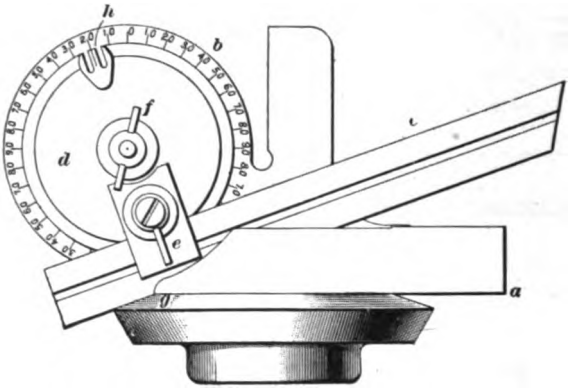

FIG. 3.

pin on the disk *b* and is held in any position by the thumbnut *f*. The protractor is shown measuring the angle of the face of a bevel-gear blank. The edge of the stock *a* is

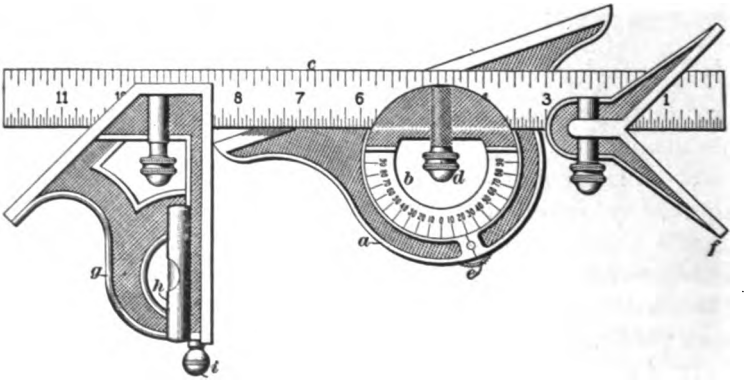

FIG. 4.

placed across the work and the arm *c* brought in contact with the face *g* of the gear and locked by means of the nut *f*. The line *h* on the disk *d* coincides with the twentieth division on the graduated circle, which is the angle of the face.

A simpler protractor of excellent design is shown in Fig. 4. It consists of a stock *a* having a graduated rotating holder *b* for the blade *c*, which is clamped in any position by the nut *d*. The holder *b* is graduated in degrees through one-half of its circumference, or 180°, and is clamped in any desired position by the thumbscrew *e*. A center-square head *f*, with which it is supplied, furnishes an excellent means for centering lathe work. The head *g* makes an adjustable square and a 45° angle, and is provided with a level *h* and scriber *i*.

6. Combination Bevel.—A tool called a **combination bevel** is of almost universal application and is of great value on general work. This tool is illustrated in Fig. 5. Though essentially the same, this bevel is made in different forms by several makers. This instrument is not graduated, but must be used with one of the several forms of graduated protractor illustrated in Fig. 6.

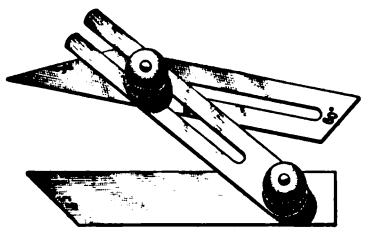

FIG. 5.

The protractor shown in Fig. 6 has the advantage of having at the center a guide pin *a*, which facilitates the setting of the bevel. This guide pin is a rivet with half of the head cut away; the bevel is held square across the cut and the outer end is set to the desired angle. The guide pin is loose enough to conform readily to the edge of the bevel.

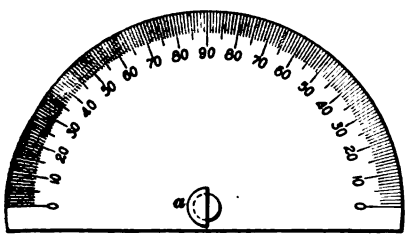

FIG. 6.

7. Center Square.—A useful form of **center square** is illustrated in Fig. 7. The body is made of $\frac{1}{2}$-inch sheet steel. The two pins *d*, *d* are $\frac{3}{8}$ inch in diameter and $\frac{3}{8}$ inch long, and are so placed that a line *b b* drawn tangent to them

will be square with the face *a a* and with the inner sides *c*, *c*

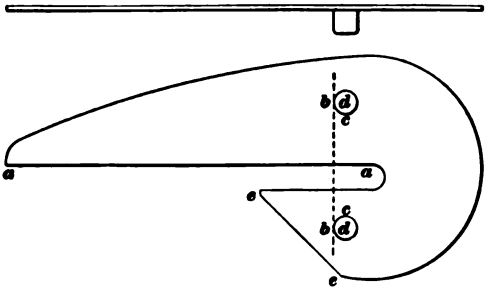

FIG. 7.

equidistant from *a a*; the face *c c* is made at an angle of 45° with face *a a*. This tool is made in a variety of sizes, and is used in centering work for the lathe; it is easily applied to either the inside or the outside of rings, and is a good square for drawing lines perpendicular to any surface or edge.

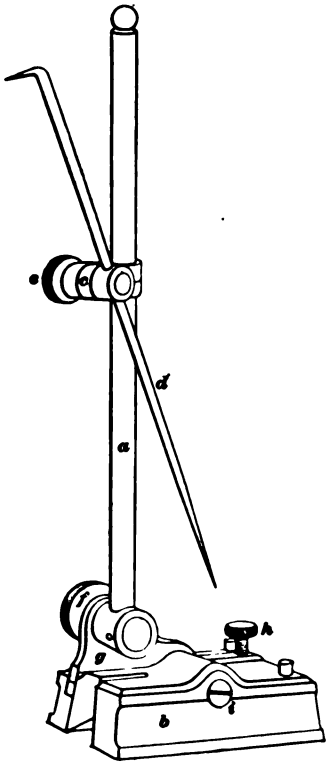

FIG. 8.

8. Surface Gauges.—Many forms of **surface gauges** are met with in shop practice, one form being illustrated in Fig. 8. The gauge shown consists of a base *b* supporting an upright *a*, which carries a clamp *c* for holding a wire scriber *d*, which is bent at one end, as shown, and locked in any position with a thumbnut *e*. The vertical rod may be set at any angle by means of the clamp and thumbnut at *f*, while a still finer adjustment may be made by means of a lever device *g* and the

thumbscrew *h*, the lever being pivoted upon the inner end of the screw *i*. This gauge is used in laying out work on the boring mill, planer, or laying-out table. By its use, castings are leveled and lined upon the tables of the various machine tools, the alinement of shafts and surfaces is tested, and many other special uses suggest themselves. A simpler form, which is used very generally, has the vertical rod *a* set solidly in a circular foot, so that *a* at all times stands perpendicular to the surface on which the gauge stands.

9. Scratch Gauge.—The scratch gauge, a convenient form of which may be seen in Fig. 9, is generally constructed from a round bar *a*, and has a pin through one end or a thin steel star *b* screwed to its end, as shown in the illustration. A movable head *c*, hardened on its face and held by a thumbscrew, may be located in any position on the bar. With this tool a variety of operations may be performed in laying out work where lines must be drawn parallel to an edge.

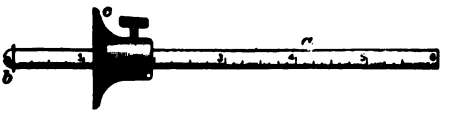

FIG. 9.

10. Hammers.—Machine-shop practice calls for a variety of operations that may be classed as **hammering.** A blow struck may be only the fraction of an ounce, such as a toolmaker strikes on his prick punch in laying out accurate centers, or it may be a blow delivered by a ram weighing a half ton and pushed by a dozen men. The hammers used by machinists weigh from ¼ to 2 pounds and are designated as **ball-peen,**

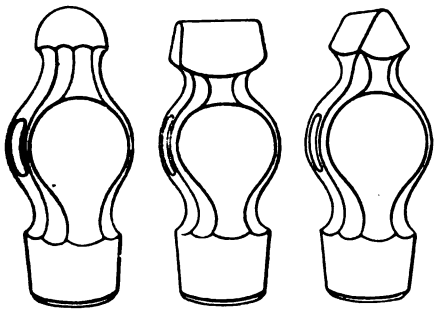

FIG. 10.

straight-peen, and **cross-peen.** The one most commonly used is the ball-peen hammer, weighing from 1 to $1\frac{3}{4}$ pounds; it is shown in Fig. 10 (*a*). This hammer is used for all ordinary work, including riveting, and the effect of the blow struck by the ball is equal in all directions. The straight-peen, Fig. 10 (*b*), and cross-peen, Fig. 10 (*c*), are used when the effect of the blow must be greater one way than the other. The smallest sizes of hammers are used on light work, such as prick marking and finishing on dies.

11. Center and Prick Punches.—Center punches, which are illustrated in Fig. 11 (*a*), are used, as their names indicate, for punching the centers of holes to be drilled in

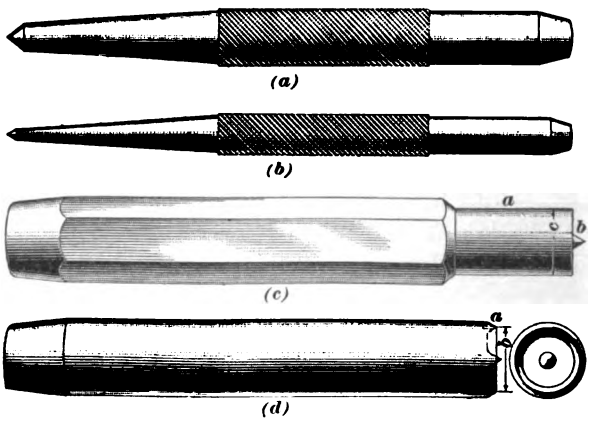

FIG. 11.

the ends of shafts and similar articles that are to be turned in the lathe, and also for making a mark or hole for starting a drill in any drilling work.

The prick punch shown in Fig. 11 (*b*) is similar to the center punch, but may be smaller, and must have a sharp, well-ground point. The prick punch is only used to make the light marks in laying out work, while the center punch is used to make a larger hole and often to move a center hole one way or another. Center punches should be ground to an angle of 60°.

12. The **marker** shown in Fig. 11 (*c*) is a center punch made of octagon steel; the part *a* is turned to the size of the holes to be marked off, and the center *b* projects about $\frac{1}{8}$ inch. In boiler work, rows of holes are first punched in the edges of the plates, which are then bolted in place; the circular part *a* of the marker is put through the holes in the first sheet and a blow struck on the head drives the point *b* into the under sheet, thus making a mark for the center of the punch. When all the holes are marked off, the sheet goes to the machine and the holes are made as marked. The size *c* of the marking punch must in all cases be the same as that of the punched hole. The marker is a tool that is also used in the machine shop to some extent.

Holes that are laid out for drilling have a circle drawn to their diameter with a pair of dividers. Where large numbers of these are to be drawn, a tool like that shown in Fig. 11 (*d*) is useful. This may be made from a piece of round steel turned as shown at *a*, making a center punch surrounded by a sharp ring *b*. The point of this tool is placed in the prick-punch mark that shows the center of the hole, and a blow on the head of the tool locates the circle. In some cases the diameter *b* of the tool is made the same as the diameter of the hole to be drilled, though for some work it is made larger than the hole and shows whether the work has been properly drilled.

13. The **scriber,** which is usually made in the form shown at *d*, Fig. 8, is commonly made of a piece of $\frac{3}{16}$-inch steel wire, from 6 to 10 inches long, ground sharp on both ends and with one end bent at right angles to the main part. It is hardened and tempered so that it will scratch any metal but hardened steel, and it is used for drawing lines in laying out work; it may be called the *machinist's pencil.* Improved scribers, with nurled handles and inserted scribing points of fine quality, are made by tool manufacturers and may be bought at reasonable prices.

14. Key-Seat Rule.—A useful tool for key-seat work is the **key-seat rule,** which is shown in Fig. 12. This

consists of two straightedges clamped or formed together so as to make a box square that is very useful for drawing parallel lines on shafting or similar curved surfaces.

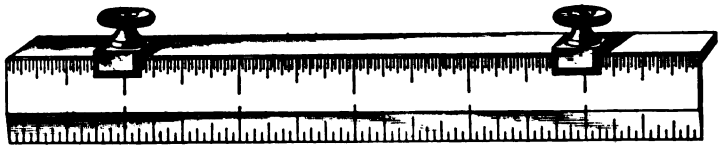

FIG. 12.

15. Bench Centers.—The bench centers illustrated in Fig. 13 are for the convenience of the vise man in centering work for the lathe. The centers *a* and *b* may be set at any location along the rod *c*. The head *d* is provided with either a spring or a screw center, so that the piece can easily be put in place or removed.

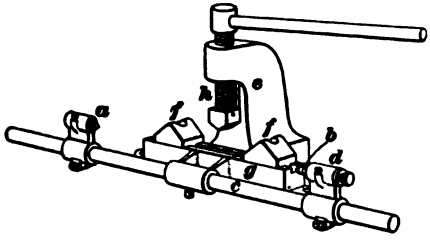

FIG. 13.

The operator takes the piece to be centered, puts it in the vise, and center-punches it as nearly as possible in the center. He now puts it in the bench center and rotates it, noting whether it runs out, and how much. Having found which side is out of the center by marking with chalk, he proceeds to draw the center hole over toward that side with the center punch. This operation must be repeated until the piece runs true enough to finish. If the middle of the piece is out of true or is crooked, it should be straightened by hammering or by bending in the screw-straightening press *e*, back of the centers. The straightening press consists of two movable V blocks *f*, *f* resting on a base *g*, and a screw *h* with a V point on the lower end, the screw being supported in a frame, as shown. To straighten a piece it is laid upon the blocks *f*, *f*, with the bend up, and the screw lowered until the bend is removed.

16. Dividers and Trammels.—Dividers are made in a great variety of sizes and forms, of which Fig. 14 may be taken as a type. They are used in drawing circles, spacing off distances, and subdividing circles.

FIG. 14.

Trammels, shown in Fig. 15, are very large dividers. They differ from the ordinary divider in that they consist of two movable heads *a* and *b* that are generally clamped to a bar of wood *c*. If the work is varied, several bars of different lengths should be provided. The tool illustrated is provided with inside and outside caliper points *d*, *d* and *e*, *e*, and long and short divider points *f*, *f* and *g*, *g*, the latter being shown in place in the movable heads. The ball points *h*, *i*, *j*, *k* shown in the center are for use where circles must be drawn or spacing done from holes in partially finished work, the ball

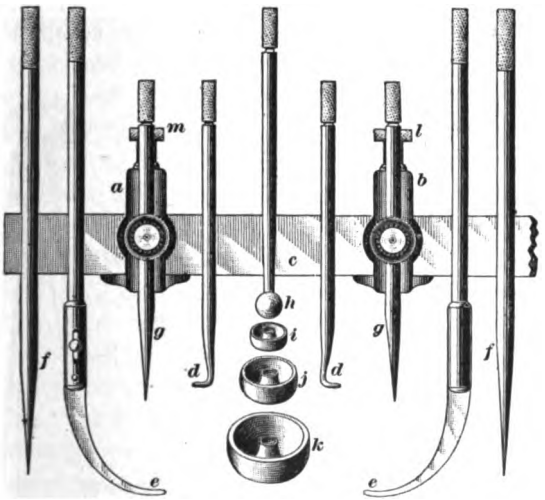

FIG. 15.

making it possible to locate the point in the center of the

hole. The heads *a* and *b* are secured to the bar *c* by the clamp screws *l* and *m*.

17. Calipers.—Calipers are of almost endless shapes and sizes, and are, perhaps, more universally used than any other tool in the machine shop. They are used to measure either the diameter or length of sizes from a small fraction of an inch to several feet.

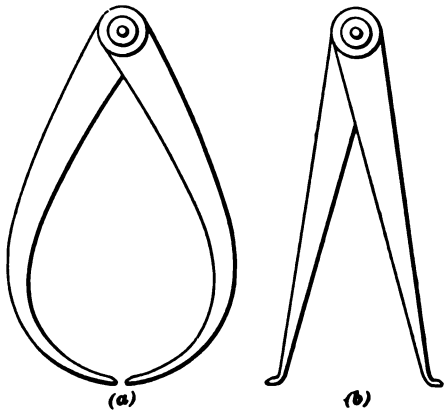

FIG. 16.

The simplest form of caliper used in the machine shop is shown in Fig. 16. Fig. 16 (*a*) illustrates an outside caliper used for taking outside measurements of shafts, wheels, and similar articles, and Fig. 16 (*b*) shows its companion tool, the inside caliper, which, as its name indicates, is used to measure the diameter of holes or the distance between two objects. The best class of caliper is provided with an adjusting screw, as shown in Fig. 17 (*a*) and (*b*). Calipers are often used to measure the outside diameter of screws, and when so used, are made as in Fig. 17 (*a*), except that the contact

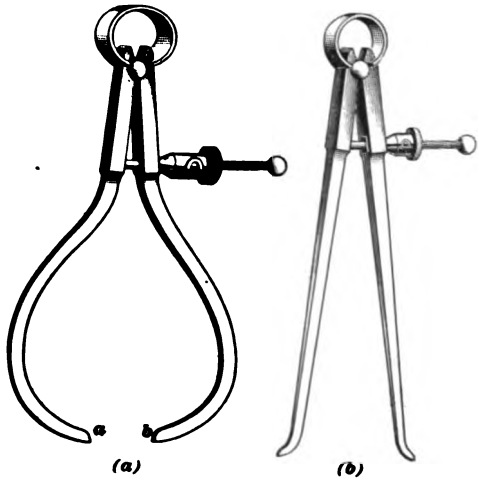

FIG. 17.

surfaces *a* and *b* are made wide enough to reach across two or more threads. The outside calipers may be set directly to a graduated rule or scale, or they may be set to standard gauges or to pieces to be duplicated and then tried on the work. The inside caliper is also set directly to holes either in gauges or in the work, and the outside caliper is in turn set to it and tried on the piece under operation. These calipers are used in connection with standard gauges or rules, or for the comparison of one size with another.

18. In *Measuring Instruments* is described another class of caliper, the vernier and micrometer, which are graduated, and from which the absolute size of the piece measured may be read in thousandths or ten-thousandths of an inch. The use of calipers is something that needs much practice to insure good results. The workman must accustom himself to the use of these tools and cultivate a delicacy of touch in order to use them to the best advantage. Mechanics have been known to detect a variation of $\frac{1}{20000}$ inch in the size of two cylindrical pieces with a pair of ordinary spring calipers, while others could scarcely feel any difference between two pieces that varied as much as $\frac{1}{64}$ inch. If the workman will set his calipers so that he can just feel them pass over a cylindrical piece and will then hold a piece of thin tissue paper against the side of the piece and try the caliper over both, he will soon learn to note a variation of $\frac{1}{10000}$ inch in size. Thin tissue paper varies in thickness, but may ordinarily be called $\frac{1}{1000}$ inch thick, and common newspaper, $\frac{3}{1000}$ inch thick.

Experience in calipering may be attained by taking a piece of soft steel about 1 inch in diameter and 1 foot long, centering it, and turning and grinding 10 inches carefully so that one end will be $\frac{1}{100}$ inch larger than the other; a sharp-pointed tool is now taken and ten lines 1 inch apart put on the piece. The diameter of the piece will now vary $\frac{1}{10000}$ inch at each line, and by trying the calipers in the various divisions one may familiarize himself with any variation that may occur between $\frac{1}{10000}$ inch and $\frac{1}{100}$ inch.

19. Inside Micrometer. — For making calculations for shrink or forced fits, an instrument called an **inside micrometer,** Fig. 18, is of great value. This instrument consists of an ordinary micrometer barrel *a* and sleeve *b*, which are graduated and read just like the micrometer described in *Measuring Instruments*. The point *c* is permanently attached to the end of the sleeve *b*, while at the other end the point *d* is adjustable, being held in place by a small clamp or chuck operated by the sleeve *e*. The point *d* is provided with two locknuts *f* by means of which the over-all distance from the point *d* to the point *c* can be adjusted so that when the micrometer reads zero this distance will be a whole number of inches. In order to adapt the instrument to measure distances over a considerable range, other points are provided to fit into the socket, the length varying by some definite amount, usually ½ inch. One of these extra points is shown in the upper portion of the cut, just above the micrometer. A full set of points up to the limit of the instrument is furnished with the micrometer. The distance from the point *g* to the shoulder *h* varies, as has previously been stated, by some definite amount, usually ½ inch, and the wear on the point *g* is compensated for by the adjusting nuts *f*.

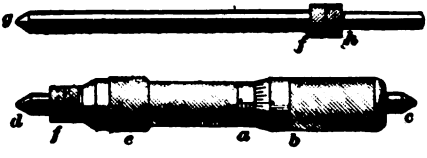

FIG. 18.

20. Wooden Caliper.—For large and very accurate work, a form of **wooden caliper,** shown in Fig. 19 (*a*), is frequently used on work from 12 to 48 inches in diameter. As it is only adjustable within small limits, a number of sizes may be made to accommodate different sizes of work. The frame should be made of some light dry wood, such as white pine, from ⅝ to ⅞ inch thick and from 2 to 4 inches wide, according to size. The main parts should be framed, glued, and screwed together. The braces *a*, *a*, Fig. 19 (*a*), may be ¼ inch thick and screwed and glued on as shown.

One arm is provided with a measuring screw *b* supported in a head *d*, shown in a larger view in Fig. 19 (*b*). The head *d* is set into the arm and is held by three bolts, as shown. The screw is made with 40 threads to the inch, and by

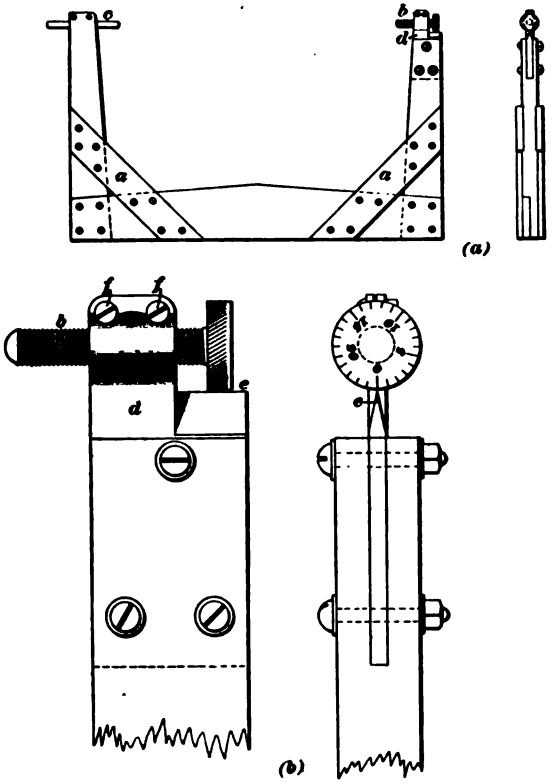

FIG. 19.

graduating the head of the screw into 25 parts and providing a knife edge *e*, as shown, to facilitate the reading, positive measurements to $\frac{1}{1000}$ inch can be made. The head is provided with a slot in the upper end and two adjusting screws *f*, *f* in order to make adjustment for wear. This head can easily be removed and attached to a caliper of another size, thus enabling it to be used with any number of sizes. The other arm of the caliper is provided with a

straight pin *c*, held in a hole bored through the arm. A saw cut in the end of the arm and two small bolts provide a ready means for setting the pin. By substituting a screw for the pin *c*, a finer and better adjustment is obtained.

When the work does not warrant the expense of such a screw head as shown in Fig. 19 (*a*) and (*b*), a screw like the one suggested to replace the pin *c* may be used instead. This screw may be made cheaply by threading a piece of rod $\frac{1}{4}$ inch or $\frac{5}{8}$ inch in diameter, splitting one end and soldering in a piece to form the wings of a thumbscrew. Any convenient thread may be used.

When fine measurements must be made with very great accuracy, a Starrett inside micrometer having a long shank may be substituted for the screw head, thus forming a micrometer caliper capable of measuring half and even quarter thousandths with very great accuracy. The wooden micrometer caliper looks crude and primitive, but it should not be judged harshly. It is lighter and stiffer than a metal caliper, is not so subject to flexure as a large metallic caliper, and is not affected by the heat of the hand, which is a constant source of error and trouble in metallic calipers.

21. Precautions in Setting Large Calipers.—The flexibility of a large pair of calipers may be tested by opening them to their largest capacity and laying them down on a table or bench, then taking an end measure of corresponding size and adjusting the caliper to it, or, if it is a large inside micrometer, setting it to the caliper. The gauge is then laid down on the bench and the caliper picked up, holding it by the joint with one hand and allowing the points to hang down. It will be found on trying it on the gauge that it will not pass over it without using considerable force. A large iron caliper should, therefore, always be set in the same position in which the measurement is made.

22. Hermaphrodite Calipers.—The hermaphrodite caliper is a combination of the outside caliper and the divider, in that one leg is an outside caliper and the other is a straight divider leg that is used as a scriber.

23. Hack Saws.—The hack saw is a tool of growing importance in the machine shop as well as in many other places. These tools were formerly rarely met with, as they were high in price and much labor was required to keep them filed sharp enough to be of any great service. Hack-saw blades are now made in lengths of from 6 to 16 inches, and even longer, and may be used either in hand frames or in specially designed power machines.

The hand frame illustrated in Fig. 20 (*a*) is an adjustable frame in which blades from 8 to 12 inches long can be used. The clamps holding the blade may be set in four positions, which allow the saw to be operated in any direction. Fig. 20 (*b*) shows the blade set at right angles to the plane of the frame to cut lengthwise of the piece.

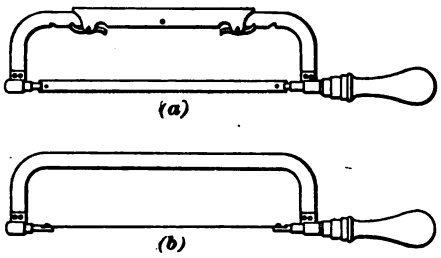

FIG. 20.

24. The **power hack saw** illustrated in Fig. 21 in many instances takes the place of the cutting-off lathe. These machines are provided with a vise for holding the stock to be cut off, and are made to stop when the piece is cut through. The blades used in the machine are generally 12 or more inches long; they will cut stock as large as 4 inches in diameter, and will cut any metal not hardened or tempered. The power saw has a great advantage over the cutting-off machine, in that it will cut stock of any irregular section. It is especially adapted to cutting off tool steel, which it does quickly, with very slight waste. The saw frame of this machine has an upward motion during the back stroke that lifts the teeth off from the piece being sawed, thus saving the points of the teeth.

Hack-saw blades are so hard that they cannot be filed, and so cheap that when dull they may be thrown away. They are made with about 25 teeth per inch for sawing thin metal,

brass tubing, and pipe, and with about 14 teeth per inch for other work. The blades used in hand frames are about $\frac{25}{1000}$ inch thick and $\frac{1}{2}$ inch wide, an 8- or 10-inch blade being the most economical. Longer blades are more liable to get

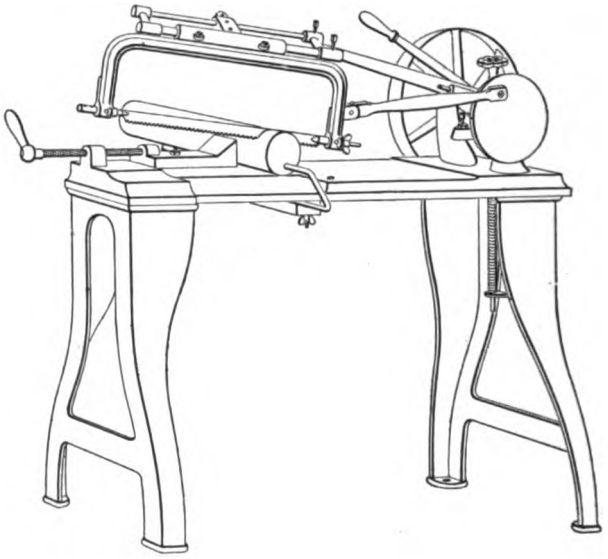

FIG. 21.

cramped and broken in the hand frame than in the machine. The blade best suited to the machine has about 12 teeth to the inch, is about $\frac{3}{100}$ inch thick, and $\frac{5}{8}$ inch wide.

Hack-saw blades, while very hard, have a fair amount of elasticity; 10-inch blades of the best makes may be bent to a half circle without breaking. In hand work, the operator should lift the frame up slightly when drawing the saw back, as the back stroke is more destructive to the teeth than the forward stroke.

25. Plumb-Bobs. — The plumb-bob may be called a vertical level. It is made in a variety of forms and has many uses in the machine shop. The plumb-bob consists of a weight hung by a string or wire. For some purposes, a nut tied to the end of a string is used, but for most work a special

form of weight is employed. A form that takes little space and has many advantages is shown in Fig. 22 (*a*). This is made by drilling out a steel rod *a* and filling the space *b* with mercury, which is held in place by the screw *c*. The cap *d* has a small hole through it, which is counterbored in the bottom to hold the knot in the line, which should be of the braided or woven variety. The small diameter of this tool makes it particularly useful when hung near a partition or upright, or in windy places. The point is ground true.

The most common form is that shown in Fig. 22 (*b*); it is often made with a brass body *e* having an inserted steel

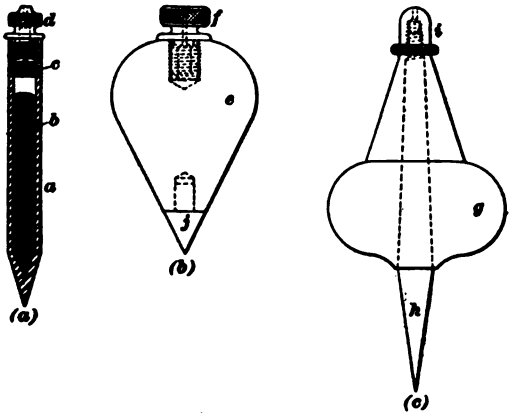

FIG. 22.

point *j* and the usual cap *f* for holding the line. This plumb-bob has most of its weight at the upper end, which makes it somewhat unsteady. A better form for use where great accuracy is desired is that shown in Fig. 22 (*c*). This is made with a brass body *g* having its greatest weight at the lower end to insure steadiness. The point *h* fits the taper hole through the body *g* and is held in position by the cap *i*. The point is readily removed for repairs and may be used without the body by simply screwing on the cap. The point may be ground by providing a sleeve about 1¼ inches long, reamed to the same taper as the body and turned parallel outside so that it may be held in the chuck. In

using a plumb-bob, if the line is unusually long, so that there is a tendency to vibrate, the plumb-bob is sometimes allowed to hang in a pail of water or oil in order to steady it.

26. Spirit Levels.—The level is used in testing horizontal lines and surfaces. The **carpenter's** and **millwright's level** is provided with a second glass, placed at right angles to the horizontal so that it may be used in testing vertical surfaces. The essential feature of this level is a glass tube or vial nearly filled with alcohol or ether and

FIG. 23.

sealed at both ends. For the carpenter's level, the tube is slightly bent, as shown in Fig. 23 (*a*). It is obvious that the air contained in the tube will always seek the highest point. Owing to this fact, the tube is mounted with its high side up. A line is generally scratched on the glass at *a* so that when the level is set against a level surface, the bubble stands central with the mark.

For work requiring the greatest accuracy, the ground-glass tube is used. This is a tube ground on the inside to a barrel shape, as shown somewhat exaggerated in Fig. 23 (*b*). The curve in these glasses is very slight, being from 25 feet to 50 feet or more in radius. The less curve there is in the glass, the more sensitive will be the level. The bubble in the ground glass is much longer than that in the bent one.

27. Fig. 24 shows the ordinary form of **iron level** used in the machine shop. The carpenter's level is generally made of hard wood, the best of them being built up of several hard well-seasoned strips glued together. Many of these are used in the machine shop.

For erecting large engines and all work where special accuracy is required, a **master level** is used. This instrument should be from 12 to 18 inches long and the base

from 1¼ to 1¾ inches wide, with a 45° V groove ¾ inch wide running its entire length. The base should be scraped perfectly flat and parallel and the V must be carefully tested to be sure that it is exactly parallel with the edges. The glass should be of the ground variety, preferably graduated.

FIG. 24.

An excellent type of this form of level is shown in Fig. 25. In this illustration, the two vertical studs *a*, *b* carrying the glass holder are provided with nuts for adjusting the glass with the base. The hole through which one stud passes should be made a little larger than the stud to allow for the sidewise adjustment that must be made in levels that are to

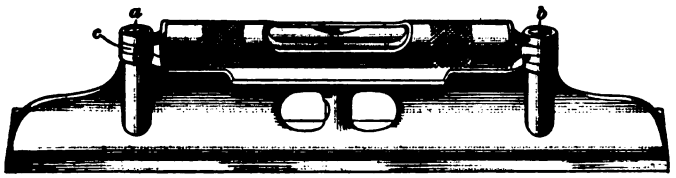

FIG. 25.

be used on a shaft. Two screws *c* through the sides of one of the glass-holder ends, Fig. 25, butting against flat spaces on the stud, accomplish this. The best of these levels, when placed on a surface plate, will show a movement of $\frac{1}{32}$ inch if a piece of tissue paper is placed under one end.

28. A level may be tested by putting it on a surface plate known to be level, and turning the level end for end; both positions should show the same position of the bubble. Next, turn the level up on one edge and note whether the bubble moves in either direction. Repeat the operation on the other side, and if the bubble still remains in the center, the glass is perfect and correctly set. Next, place two short rollers of exactly the same diameter on the plate and place

½ inch of the end of the V on each, keeping the tool as near level sidewise as possible, and then rock it from one side to the other. In this test, as in the other, the bubble should stand central. If it does not, the V should be scraped until it does.

If, in selecting or setting a glass, it is found that it is perfect in the horizontal position, and when set up edgewise will always show high on one end and is the same when reversed, the fault is due to a slight defect in the glass, probably caused when the opening was sealed, one end having been made a little larger than the other. It can only be noticed when the level is rotated on the rollers or on a shaft, as shown in Fig. 26.

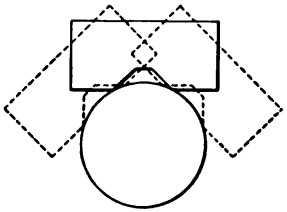

FIG. 26.

29. Hydrostatic Level.—A convenient form of level for some purposes is the **hydrostatic level** illustrated in Fig. 27. This consists of two upright glass tubes *a*, *a* with suitable graduations; bases provided with stop-cocks *b* and a hose *c* connect the bases. When leveling two points, one gauge is placed on each. The stop-cocks are opened and when the water comes to rest are closed again, thus confining it at the exact height indicated. Any length of hose may be used and freezing may be prevented by adding about 10 per cent. of glycerine to the water when filling the level. This instrument is particularly adapted to leveling line

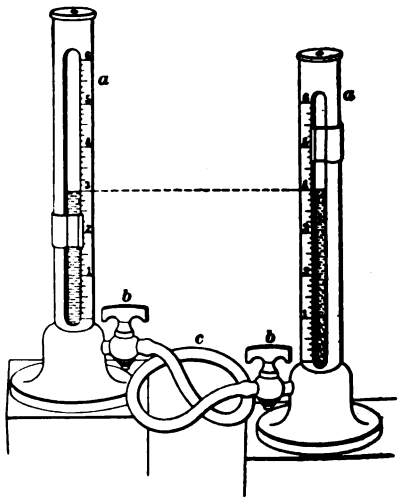

FIG. 27.

shafting having pulleys so close together that an ordinary level cannot be used. The hose may be carried around disk pulleys, clutches, and hangers or through partitions.

CLAMPING AND HOLDING DEVICES.

30. Introduction. — In the machine shop a large amount of work is necessarily done by hand, and holding and clamping devices of various sorts are required for pieces that are not heavy enough so that their own weight will give them the necessary stability. The parallel jaw vise will hold nearly all plane pieces, and special jaws or devices are made for holding irregular and special forms. Several types of vises and special devices will be illustrated and described, and these may serve to suggest others suitable for special operations.

31. Screw Vise.— In Fig. 28 is illustrated a heavy form of ironworker's vise designed for the largest, heaviest, and roughest class of work. The jaws are made as large as 8 inches wide; and while this type is useful for large work, it is also copied in the well-known hand vise with jaws 1 inch or less in width. In this vise the jaw is operated by the screw, which requires considerable time for its manipulation. Where a vise has to be operated very often or through a considerable portion of its jaw traverse, some special provision must be made.

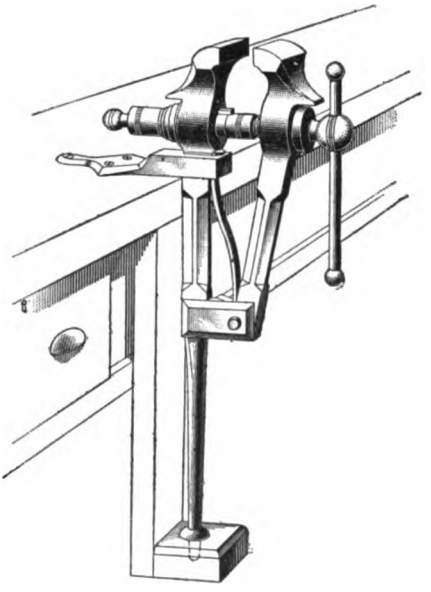

FIG. 28.

32. Rapid-Motion Vise.—In Fig. 29 is an illustration of a vise so constructed that the operator simply pushes the cam-handle *a* away from him with his right hand and thus releases the work and allows the movable jaw *b* to be rapidly pushed or pulled into any position. The work is placed between the jaws and gripped by a pull on the lever.

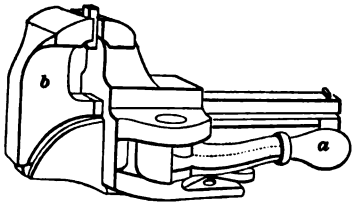

FIG. 29.

33. Swivel Vise.—For the tool room and many places where light or fine work is done, a screw vise like that shown in Fig. 30 is frequently used. This vise is made in various sizes up to those with 7-inch jaws. A common size for tool-room use has a jaw 2§ inches wide. The back jaw *a* is hinged and held parallel with the front jaw by a taper pin *b*, shown above. It is often desired to hold wedge-shaped pieces, and for this work the pin *b* is removed and the pressure of the fixed jaw against the work rotates the movable jaw to conform to the piece held. This vise is also provided with a base plate *c*, which is bolted fast to the bench. The vise proper is swiveled to this base and held in any desired position by the pin *d*, which is drawn up to release the vise and dropped into one of a series of holes in the base when the vise is in the proper position.

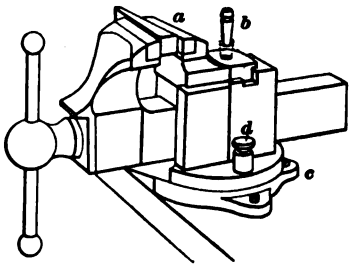

FIG. 30.

34. Pipe Vise.—The pipe vise is a special form of tool made for firmly gripping pipe or other hollow pieces that would be crushed if gripped in the ordinary vise. Fig. 31 illustrates one of the best forms of vise for this class of work. The pipe is gripped between two jaws *a*, *a'* held in a malleable-iron frame with a movable top *d* hinged at *c*. When in use, the free side of the top *d* is held in place by

the pin *f*. The hinged top on this vise allows fittings to be screwed to both ends of a piece of pipe, and then, by simply withdrawing the pin *f*, the whole top of the vise may be thrown back clear of the work, which can be lifted out instead of being pulled through the jaws.

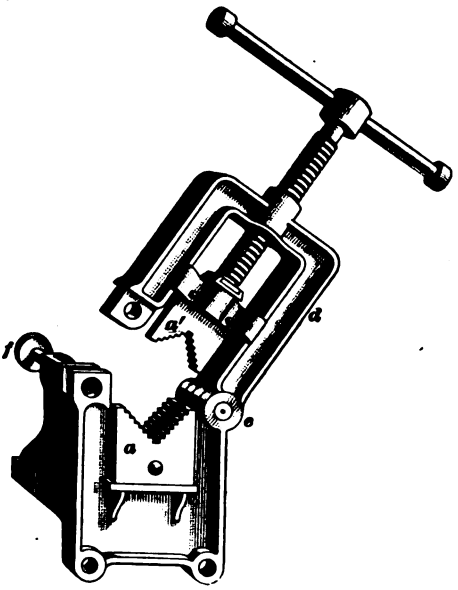

FIG. 31.

35. Vise Jaws. All the vises illustrated are made of cast iron, except the pipe vise, which is of malleable iron. These materials make poor gripping surfaces, so the jaws are covered with welded or riveted steel faces having cross-cuts on them, in order to grip the work more firmly. It is plain that a piece of finished work gripped in such a manner would be seriously marred. This trouble may be overcome by using the device shown in Fig. 32, which is admirably suited for holding the best finished work. It consists of two pieces *a*, *a* having shoulders *b*, *b* to keep them from falling out of the vise. These pieces are held apart by springs *c* that press them against the jaws when the vise is open, and they are faced with vulcanized paper, which is used like any of the copper,

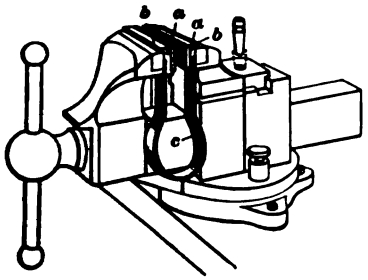

FIG. 32.

lead, or leather pieces so commonly used for such work. An appliance of this sort provided with round holes of various sizes, half of the hole being in each jaw, permits finely polished brass or nickeled pipe and similar work to be held without marring the finish.

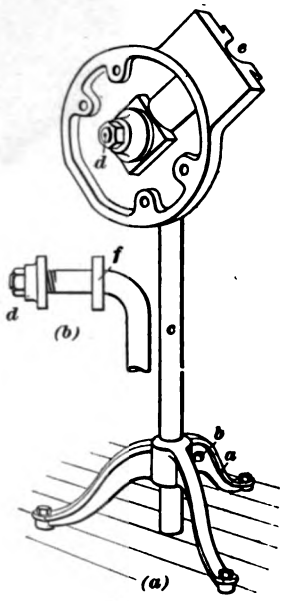

FIG. 33.

36. Special Forms of Vise. Special forms of vise are often made for holding work that is of such form as to make it inconvenient to hold it in the common vise. A good example of this class of tool is the **filing stand** shown in Fig. 33 (*a*), which is a fixture for holding the swivel slide of a planer head while the edges are being finished. This vise, or holder, consists of a three-legged base *a*, screwed to the floor, supporting an upright *c* that may be clamped in any position by the set-screw *b*. The top of the upright is bent at right angles to *c* and threaded for the nut *d*, which clamps the work *e* against the solid collar *f*, as shown in the detail view of Fig. 33 (*b*).

37. Clamp Dog.—The clamp dog illustrated in Fig. 34 is made in several forms and finds many uses in the shop. This dog has two clamp pieces *a* and *b* held together by the binding screws *c* that pass through over-sized holes in *b* and tapped ones in *a*. Notches cut in both jaws hold the dog square with the shaft to which it is attached. The tail *e* should be bent from the solid bar and not set in, as is sometimes done. For lathe

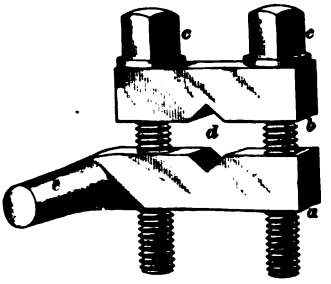

FIG. 34.

work, the tail may be made round, but if the dog is to be used on the milling machine, it should be made flat, with the flats standing toward the center notch *d*. This dog is often used in floor and bench work, and is very useful, especially in grinding joints and bearings where a solid dog could not be placed, and when made for general work, both screws and clamps are made heavy enough to stand any reasonable strain that will come upon it.

REAMING STANDS.

38. The reaming stand, Fig. 35, is another form of special vise, consisting of an upright *a*, the top *b* of which carries four jaws *c* operated by the handle *d*. This stand is bolted to the floor and has an opening *e* in the column so that tools may be run clear through the work and removed at the bottom. Pulleys, gears, and similar pieces may be held for hand reaming and work may also be held for tapping. A similar, and, for some purposes, more convenient form of reaming stand is made by fastening a four-jaw combination or universal chuck on an upright. The universal chuck has the advantage that for many small pieces only one screw has to be moved to put in or remove the work.

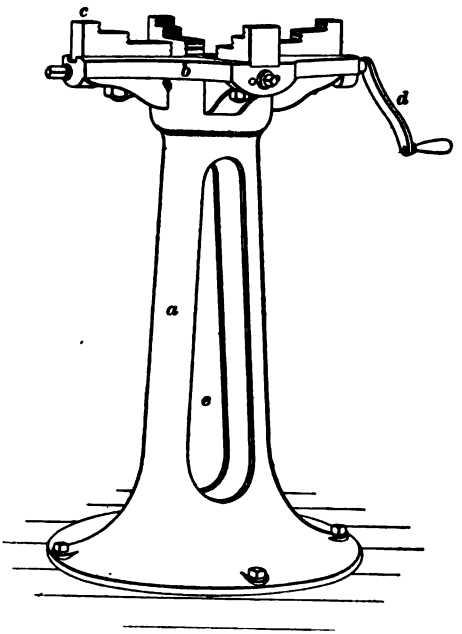

FIG. 35.

BENCHES.

39. Introduction.—It has already been said that bench work is to be distinguished from floor work only by size and weight of the parts on which the work is to be done, the heavier parts being placed on the floor and the lighter on benches of suitable height. The benches form a very important part of the equipment of a shop, especially where a large amount of light work is done. They are usually made about 30 to 36 inches high, depending on the character of the work, the lighter work being done on the higher benches.

The design of benches varies greatly, some being made stationary and others portable. The design must, however, always have provision for attaching a vise, without which a machinist's work bench is not complete. For this reason they are frequently called *vise benches*. A number of representative benches of the best classes in use are here described.

40. General Arrangement.—The vise bench should be located along the side of the room where the best light is to be had. The north side of the building makes the best location for the bench because the light is more even at all hours of the day. The main features of the bench must, of course, be governed by the work to be done, but it should always be convenient, clean, and rigid. In many shops the bench is made with wooden uprights fastened to both the wall and the floor, and has a hardwood top, which is 2 inches thick for a bench for light work and from 3 to 4 inches thick for a bench for heavy work. The front of the bench gets the hardest usage and the back half of the top may be made much thinner. Vises suitable for the work to be done should be located at convenient distances apart, and for each vise there should be one or more drawers, each provided with a lock and arranged to hold conveniently such tools as the workman may require. Sometimes a tier of drawers is put in instead of the single one, while at other times cupboards are preferred. Cupboards, however, take up a great

deal of room and hold comparatively little, and for this reason the drawers are usually more desirable.

41. Bench With Cast-Iron Legs and Frame.—The best form of bench for general use is that illustrated in Fig. 36. A cast support *a* is bolted to the floor and also to the wall. The lower part has a bracket for carrying a shelf *b* that extends the whole length of the bench, while provision is made under the top for alternate drawers and shelves. Provision is also made in each support by which the bolt holding the vise passes through the casting and thus holds

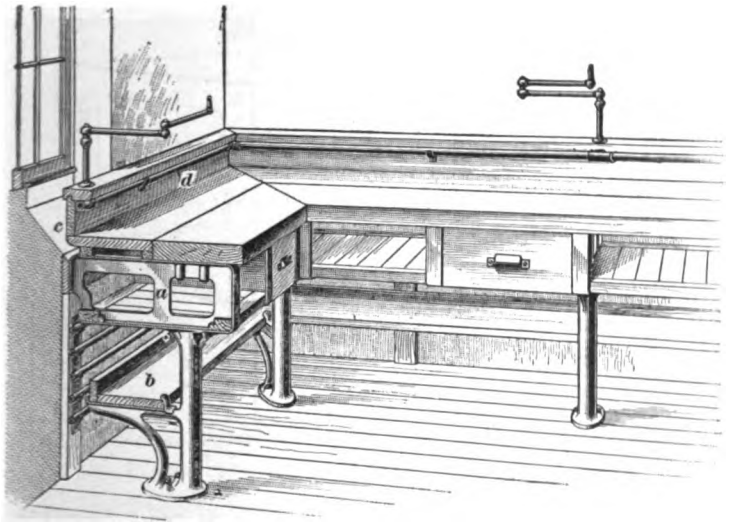

FIG. 36.

the vise in the most rigid position. The shelf near the bottom is so placed as to allow ample room for the sweeper to get his broom clear to the wall. The top of the bench should be made smooth and all the visible woodwork should be varnished with good shellac. This makes it much easier to keep clean and neat. If the shop is heated by steam, the pipes may be placed under the bench and openings *c* provided before the windows. This insures a rising

current of warm air past the window and so protects the workman from cold drafts. In the form shown, a gas pipe *d* extends along the back of the bench.

42. Portable Benches.—Another form of bench is the portable bench, of which Figs. 37 and 38 are good types. The largest of these, Fig. 37, is made with an angle-iron frame *a* carrying a wooden shelf *b* and having a cast-iron top *d* that may be planed true and used as a laying-out table. It is provided with two vises and drawers *e* for tools.

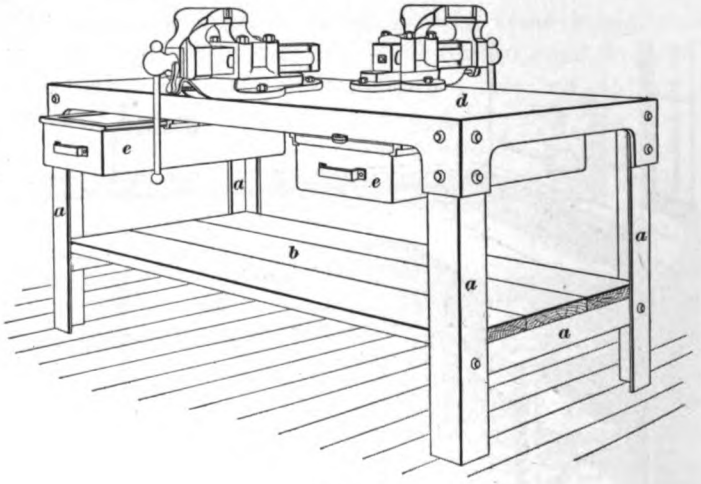

FIG. 37.

This bench may be moved to the work, instead of taking the work to the bench, which makes it especially useful in large shops where heavy machinery is erected; and when engines or other machines are shipped, the bench is often loaded on the cars as one of the erecting tools, and is returned to the shop when the work is finished.

43. Cast-Iron Bench.—A very convenient form of portable vise bench is illustrated in Fig. 38. This bench consists of a cast-iron column *a* carrying a cast-iron top *b* provided with two vises, but the bench may be used without the

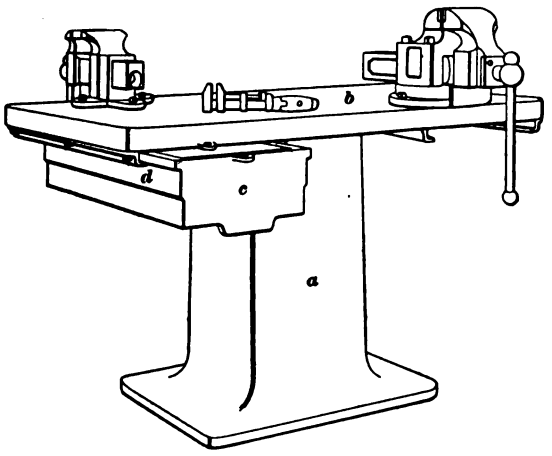

FIG. 38.

vises for a small laying-out table. A cast drawer *c* held by gibs *d* provides a convenient place for the tools used by the workman. This bench is easily moved to any part of the shop where the work is being done, and it takes up but little space.

44. Post Bench. — Fig. 39 shows a convenient form of bench that may easily be constructed out of two pieces of timber cut to fit a post or column and fastened in position with two bolts. It is useful principally as a vise bench, as shown, but may be used for a variety of purposes.

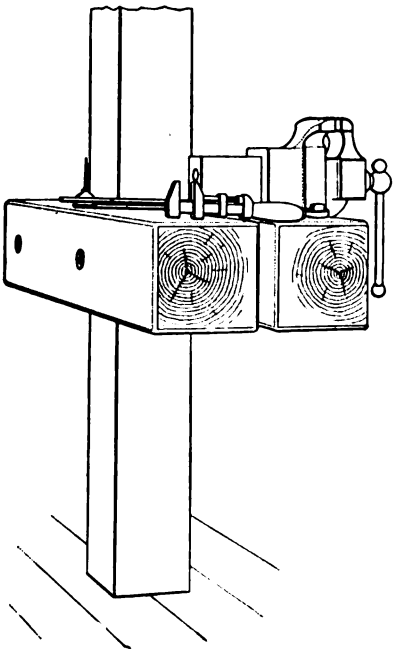

FIG. 39.

COLD CHISELS.

45. Flat Chisel.—The forms of chisels most commonly used are the *flat*, *cape*, *diamond*, *grooving*, and *side* chisels, and the *gouge*. They are generally made from octagon steel of such size as to be most convenient for the work for which they are to be used. Special grades of steel

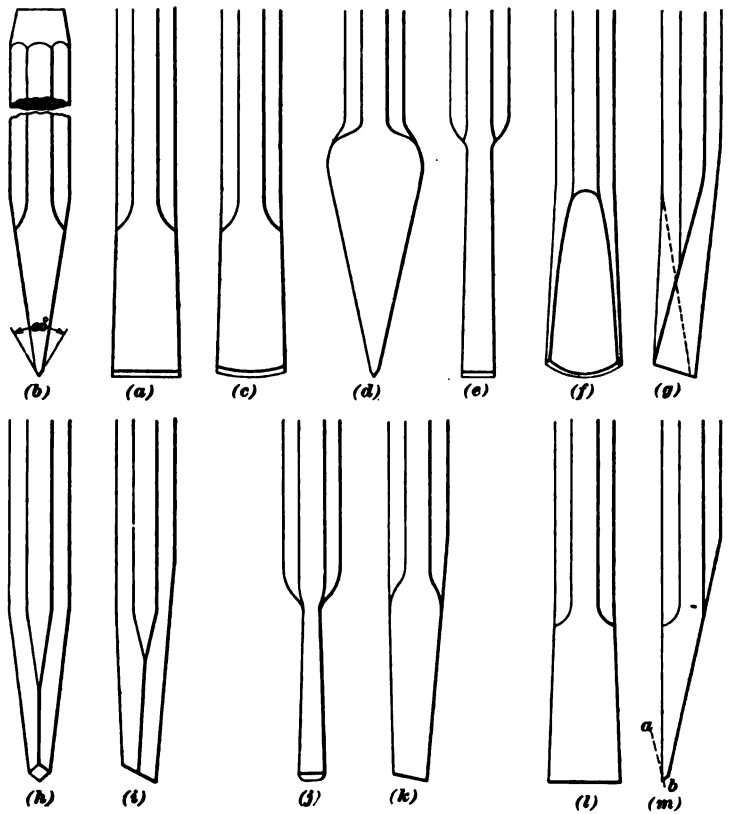

FIG. 40.

are made for chisels, and much trouble will be saved by using these grades for this class of work.

The **flat chisel** is the one most generally used; it is made in the form shown in Fig. 40 (*a*) and (*b*). The width

of the cutting edge should, if possible, be proportioned to the hardness of the metal on which it is to be used, but if one width of chisel must answer for brass, cast iron, steel, and Babbitt, lighter blows should be struck while cutting the softer metals, or the metal will be broken away before the chisel and not be cut smoothly. A chisel about 1 inch in width is usually used for general purposes.

For finishing surfaces, the edge of the flat chisel should be ground square, as shown in Fig. 40 (*a*), the best angle for ordinary work being about 60°, as shown in Fig. 40 (*b*). This angle may, however, vary between about 50° and 75°, depending on the hardness of the material to be chipped. Chisels ground with square corners, as shown in Fig. 40 (*a*), are apt to have the corners broken when used for heavy work, but this can be prevented to some extent by grinding the chisel slightly rounding, as shown in Fig. 40 (*c*). This mode of grinding is especially useful for chisels that are to be used for removing small amounts of material from fine work, as the corners are always in sight and serve as guides to the operator.

46. Cape Chisel.—The cape chisel, which is shown in Fig. 40 (*d*) and (*e*), is used for narrow grooves, and is made in widths to correspond to the widths of the grooves to be cut; for general work it may be from $\frac{3}{8}$ to $\frac{1}{2}$ inch wide. This chisel should be made wider at the cutting edge than it is farther back, in order to provide side clearance. The chisel will then work easier and will not break out the edges of the groove. Where a large surface is to be finished by chipping, it is customary to drive a number of grooves across it with the cape chisel and then use a flat chisel to remove the stock left between the grooves.

47. Gouge.—The half-round gouge shown in Fig. 40 (*f*) and (*g*) is for work on rounded surfaces or fillets or for cutting half-round grooves.

48. Diamond Point.—The diamond point shown in Fig. 40 (*h*) and (*i*) is used for V-shaped grooves or for

finishing out corners. It is largely used with a very light hammer in lettering bottle molds, for which use it is made from $\frac{3}{8}$-inch steel.

49. Grooving Chisel.—The grooving chisel, Fig. 40 (*j*) and (*k*), is used for oil grooves and similar work, and is often made of extra length to reach through long hubs. This chisel should be made wider at its cutting edge than it is farther back, as in the case of the cape chisel; otherwise it is apt to leave a burr on the edges of the groove.

50. Side Chisel.—The side chisel shown in Fig. 40 (*l*) and (*m*) is used for finishing the sides of slots and similar work. The chisel is ground straight on the side next to the work, if it is to be used in deep holes; for shallow holes it is best to give it a slight angle, as indicated by the line *a b*, Fig. 40 (*l*), and to allow the body of the chisel to stand at a greater angle to the work while being used.

The proper cutting angle for most of the chisels mentioned above is practically the same as that for the flat chisel for metals of the same grade, the angles for different grades of metal varying from 50° to 75°. The softer the metal, the sharper the chisel should be.

Cold chisels are often used in the pneumatic hammer, and when so used the shanks must be fitted to the holder in the hammer, either by turning or milling, and the head should be carefully tempered in order to keep it from being upset in the socket of the machine. The chisels used in the pneumatic machine should be longer than those used by hand.

CHIPPING.

51. Introduction.—Chipping is the process of removing stock by means of the hammer and chisel. It corresponds to the roughing cut in machine tool work, and the filing that follows it takes the place of the finishing cut.

There are two methods of chipping—the hand and the pneumatic. Chipping is a process applied to the roughest

and coarsest work, and it is also used on some of the finest work that comes to the machinist. It is used in the machine shop, foundry, and smith shop, and chisels of various sorts form an important part of the outfit of the erecting gang. A heavy chisel fitted with a wooden handle is used in both foundry and machine shop for removing the largest projections and fins on castings.

52. Holding the Hammer and Chisel.—For ordinary chipping, a hammer weighing from 1 to 1¼ pounds is used, and a variety of chisels, the most common of which are the flat, cape, gouge, and various forms of side and

FIG. 41.

grooving chisels. When chipping, the hammer is held in the right hand, as shown in Fig. 41, and is grasped by the thumb and second and third fingers, the first and fourth fingers being closed loosely around it. This method of

holding the hammer handle allows it to be swung more steadily and more freely without tiring the hand so much as would be the case if the handle were grasped rigidly by all four fingers. The chisel should be grasped in the left hand with the head close to the thumb and first finger. The chisel is held firmly with the second and the third fingers, and the little finger may be used to guide the tool as may be required. The first finger and the thumb should be left slack, as they are then in a state of rest, with the muscles relaxed, and are less liable to be injured if struck with the hammer than if they were closed rigidly about the chisel. The point of the chisel is held on the work, as shown in Fig. 41, at the place where it is desired to take the cut, before the hammer blow is delivered, and at an angle that will cause the cutting edge to follow approximately the desired finished surface. After each blow the chisel is reset to its proper position.

EXAMPLES OF CHIPPING.

53. Piston-Valve Bushing.—Fig. 42 is an illustration of one class of bench work; *a* represents the bushing of a piston valve in which two series of ports *b* and *c* must be cut out of the solid metal by hand. This same operation may be performed more economically on a milling machine, but it is frequently done by hand. The ports are laid out in the usual way, the outline *d* being clearly marked on the painted surface. The bushing is then taken to the drilling machine and the ports are drilled out, just enough stock being left outside of the drill holes to insure a good finish. The holes may be drilled so close together that when the drilling is finished, the block of metal may easily be removed by a blow with the hammer. The ridges between the drill holes are chipped away, as shown in the illustration, and the sides of the ports are finally finished to the lines by filing.

54. Key Seats.—Key seats in pulleys and gears are often chipped in. They are first laid out on both ends of

the hub and lines drawn through the bore. If the key seat is a narrow one, a chisel of corresponding width is used and the cut driven from each end; but if the seat is a wide one, two or more narrow parallel grooves are chipped through, and the stock between is removed with a flat chisel.

FIG. 42.

55. Cutting a Keyway.—The manner of laying out and cutting a key seat in a shaft is as follows: The key seat is first laid out as shown by the lines *a b*, *c d*, *e f*, Fig. 43 (*a*) The lines are sometimes marked with a prick punch, as shown. The side lines *a b* and *c d* of the key seat should be marked with a deep chisel cut, as shown at *a* and *d* in the end view, to prevent the material from tearing out along the sides of the keyway during the first cut with the chisel. This cut is best if made with a side chisel ground and held in the manner shown at *g*, Fig. 43 (*b*). An ordinary flat chisel may be

used for this mark, if ground quite thin and held at such an angle as to bring one of its cutting sides square with the side line *d*.

A cape chisel of proper width is used to remove the stock, several light cuts being driven through the key seat, as indicated by the dotted lines in Fig. 43 (*a*). The key seat, if long or at the end of the shaft, may be finished by filing, but when it is in the middle of the shaft this is impossible, and the finishing must be done with chisels.

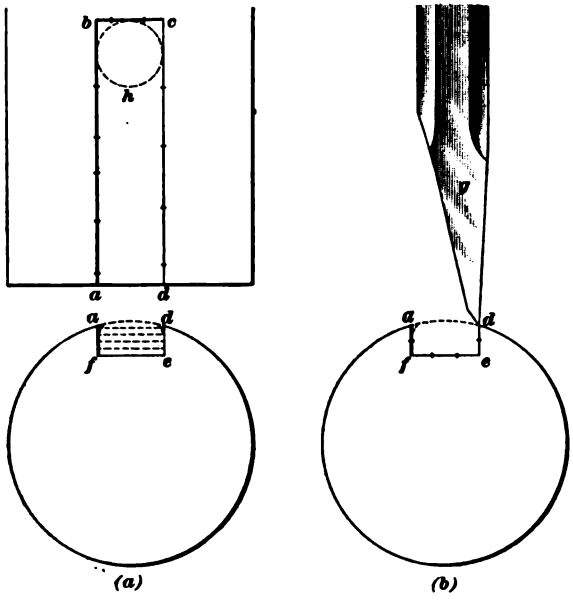

FIG. 43.

It is sometimes considered easier to drill out the stock before chipping. This is done by laying out and drilling a line of holes like that marked *h*, Fig. 43 (*a*), down to the right depth and squaring the bottoms with a square-end drill and chipping the remaining stock to the lines. This is especially applicable to large key seats.

56. Chipping Large Flat Surfaces. — Large surfaces, whether flat or curved, are finished by chipping in the

following manner: The piece is laid out as shown in Fig. 44, the lines *a b*, *a c*, etc. extending around the work in such a manner as to outline the edges of the required surface. In order to facilitate the starting of the chisel and to prevent the breaking off of the stock as the chisel leaves the work, it is well to chamfer the front and back edges as shown at *a b* and *c d*. The stock above the lines *a b*, *c d*, etc. is removed by first cutting grooves *e*, *e* across the surface, leaving the ridges *f*, *f* between. These ridges are subsequently removed

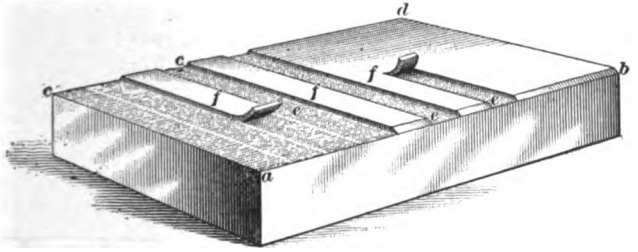

FIG. 44.

with a flat chisel. In the illustration, the left-hand ridge has all been removed, and half of the one next to it. By cutting the grooves across with the cape chisel, the work of the flat chisel is much reduced, as it has only straight cutting with no tearing or lifting of the metal at the corners. The width of the ridges *f* is determined by the width of the flat chisel to be employed and should be as wide as the character of the material being cut will permit.

57. Chipping Strip.—The castings for boiler fronts and many other kinds of work are frequently fitted by chipping and filing. Work of this class has what is called a **chipping strip** on the casting wherever fitting is to be done. This strip is $\frac{1}{8}$ inch or more higher than the body of the casting and wide enough to make the joint or fit. Castings to be fitted by this process are put together and their high spots noted, chalked, and chipped off. As the work progresses and the heavier parts are removed, red marking is rubbed on the work and the parts tried or rubbed together. The coating of red will be rubbed off on the spots

that come in contact with the other part, thus showing more plainly where the chipping must be done. When the parts have been chipped to fit approximately, they are finally finished by filing.

58. Pneumatic Hammer.—The pneumatic hammer illustrated in Fig. 45 is sometimes used for chipping, and has some advantages over the hand method. It is supplied with air at a pressure of about 80 pounds to the square inch with a small hose connected to the hammer at *a*. The operator holds the chisel *b*, which has a hexagonal shank fitting a similarly shaped socket in the machine, in his left hand, as in ordinary chipping, and the machine is held by the handle *c*

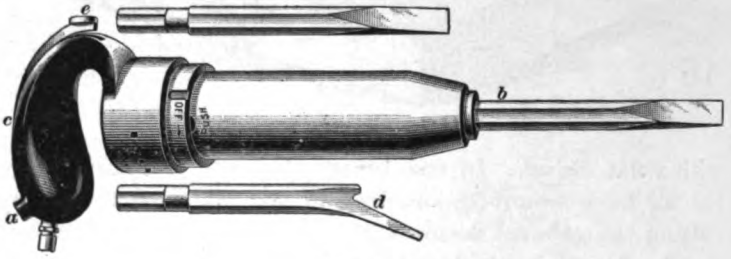

FIG. 45.

in his right hand, with the thumb on the trigger *e*. The whole is held firmly in position against the work and light pressure applied to the trigger to start the chisel into the metal. As soon as the cut is started, more air may be admitted to the tool, making it strike harder and faster. The blows struck by this hammer are so rapid that the chisel has almost a continuous cutting motion. Heavy or light blows may be struck, as the operator desires, by regulating the pressure of the thumb upon the trigger.

Pneumatic machines of this type are used for many purposes, and have round instead of hexagonal bushings for holding the chisel. The chisel with the hexagonal shank is easily guided by the handle *c* of the machine, but the round-shanked chisel must be guided by the left hand. The tool shown at *d* is used for beading boiler flues and similar work.

59. Die Sinking.—Die sinkers do a great deal of chipping in finishing their dies. All the stock that can be is removed by some form of machining and the inaccessible parts are chipped with special chisels and finished by filing and scraping.

60. Making Bottle Molds.—The lettering on glass bottles is made by letters cut into the bottle mold. The letters are marked off in the mold and then the operator chips them out, using a hammer weighing about 4 ounces. The main parts of the letters are formed by a V or diamond-shaped chisel, like the one shown in Fig. 40 (*h*) and (*i*). During this portion of the work the chisel is driven ahead, as in ordinary chipping; but to form the ends of the molds, the chisel is held in an upright position and driven downwards. A graving tool is used to smooth the letters, and bent or half-round files are used for smoothing the surface of the mold.

FILES AND FILING.

INTRODUCTION.

61. Use of Files.—In finishing machine parts, there are many cases where a smaller reduction in size or a more perfect surface is required than can be obtained by the use of machine tools or by chipping. Files are used for either of these purposes, for by their careful and skilful use great accuracy can be obtained. In order to make a rough surface smooth, files of various degrees of fineness are used, a coarse one first, followed successively by finer grades, the piece being finished with the finest.

62. Elementary Principle.—A file is made of a piece of steel of the desired shape and size, and has a series of grooves cut across its face. When a file is passed over the surface of a body of metal or other material, the teeth formed by the grooves act on it as a series of small chisels,

each removing a small chip. By passing the file across the surface successively, the high parts are removed. Each file, however, leaves its own marks, and these are removed, if desired, by means of the finer grades.

DEVELOPMENT OF FILES.

63. Hand-Cut Files.—Formerly, all files were cut by hand with flat chisels, the spacing being gauged by the eye, shape of chisel, and weight of hammer blow. The steel from which they were made was forged to the required shape, with a tang on which to fasten a handle. The piece was then carefully annealed, after which it was ground and cut. The hardening was usually done by covering the file with a coating of some substance that protected the teeth from the action of the heat, but permitted the body to be heated to a temperature that would give the proper hardness when the file was plunged into a bath of oil or water.

64. Machine-Cut Files.—On account of the expense of hand cutting, various methods of cutting with machines have been tried, with varying degrees of success. The first machine-cut files were cut with regularly-spaced teeth. There are serious objections to this style of files, since, in filing, the teeth follow each other at regular intervals and drop into the cuts made by the preceding ones, causing chattering. The hand-cut files are more satisfactory, as the slight irregularity in the spacing is sufficient to prevent the chattering. This difficulty in machine-cut files was overcome by a few makers by two methods. It was found that by increasing the spaces between the teeth gradually from the end to the middle, and again decreasing as the other end is approached, enough variation may be produced to prevent the chattering, without causing enough change from the true spacing to affect the working conditions. By this method of cutting, called the *increment cut*, the two ends of the file are of the same coarseness, while the middle is somewhat coarser.

Files are also cut with the gradations of spacing running from one end to the other, the spacing being finer at the point and increasing gradually to the shoulder, thus accomplishing practically the same result as in the style mentioned above. This is also known as an increment cut.

Chattering is also prevented by cutting the teeth slightly out of parallel. By changing the direction of the deflection several times in the length of the file, enough variation may be obtained to avoid this trouble. Files cut in this way are largely used at the present time.

It has been found that by varying the angle of the motion of the file gradually during the forward stroke, when there is a tendency to chatter, the regularly-spaced file will work smoothly and well, and hence this style of file is still used in many shops.

DEFINITION OF TERMS.

65. The following definitions are taken almost in their entirety from "Filosophy," one of the publications of the Nicholson File Company.

Back.—A term commonly used to describe the convex side of half-rounds, cabinets, pitsaws, and other files of similar cross-sectional shape.

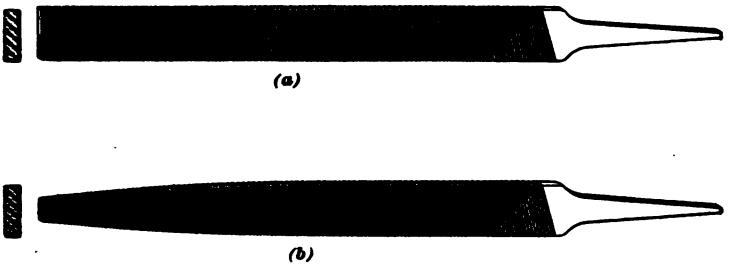

FIG. 46.

Bellied.—A term sometimes used to describe a file having a fulness in the center.

Blunt.—A term applied in describing files that preserve their sectional shape throughout, from *point* to *tang*, as shown in Fig. 46 (*a*).

Equaling.—A term applied to describe a *blunt file* upon which is produced an *exceedingly* slight belly, or curvature, extending from *point* to *tang*, the file apparently remaining blunt.

Filing Block.—A piece of hard close-grained wood, having grooves of varying sizes on one or more of its sides. It is usually attached to the work bench by a small chain, and when grasped in the jaws of a vise is particularly useful in holding small rods, wires, or pins that are to be filed; also in filing small flat pieces that are held on the block by pins or by letting in.

Float.—The coarser grades of single-cut files are not infrequently called *floats* when cut for the plumber's use or for use on soft metals or wood.

Hopped.—A term known among file makers, and used to represent a very coarse, or *open*, spacing of the teeth (sometimes exceeding $\frac{1}{2}$ inch), mostly applied to the backs of half-rounds and to the edges of quadrangular sections.

Middle Cut.—A term used to designate the cut of a file when it is of a grade of coarseness between the *rough* and the *bastard*. It is but little used in this country.

Recut, or Recutting.—The working over of old or worn-out files by the several processes of annealing, grinding out the old teeth, recutting, hardening, etc., and thus again preparing them for use. This operation is sometimes repeated two and even three times, but the economy of recutting at all is very much questioned, and the practice is done away with in most of the best shops of the present day.

Safe Edge (*or Side*).—Terms used to denote that a file has one or more of its edges or sides smooth or uncut, that it may be presented to the work without injury to that portion which does not require to be filed.

Scraping.—As applied in machine shops, the process consists of removing an exceedingly small portion of the wearing

surfaces of machinery by means of scrapers, in order to bring these surfaces to a precision and nicety of finish (as determined by the straightedge or surface plate) not attainable by the file or by any other means with which we are acquainted.

Superfine (or Super) Cut.—A term applied by the Lancashire file makers to designate a grade of cut known in America as "dead smooth."

Taper.—This term is used to denote the shape of the file shown in Fig. 46 (*b*) as distinct from blunt. Custom has also established it as a short name for the three-square, or triangular, hand-saw file.

DISTINGUISHING FEATURES.

66. Character of Cut.—The teeth of files are not generally cut at right angles to the sides of the file, but are set at an angle, as shown in Fig. 47. This angle varies for different materials. Files used in machine shops are cut in two different ways, known as *single-cut* and *double-cut*.

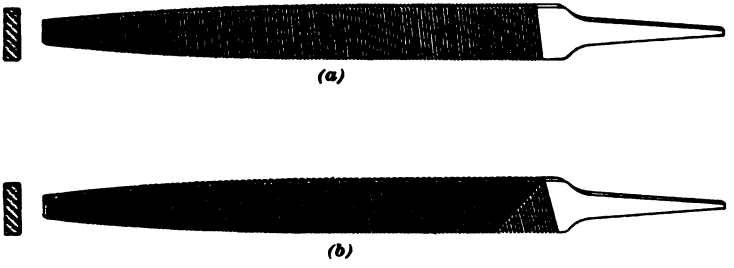

FIG. 47.

67. Single-Cut.—Single-cut files are cut with a single series of teeth running continuously from one end of the file to the other, as illustrated in Fig. 47 (*a*). They are used almost entirely for filing in lathes, and for the softer materials, such as lead, wood, horn, etc. The coarser grades are often called *floats*.

68. Double-Cut.—Single-cut files are rarely used in the machine shop, except on lathe work or on brass. By

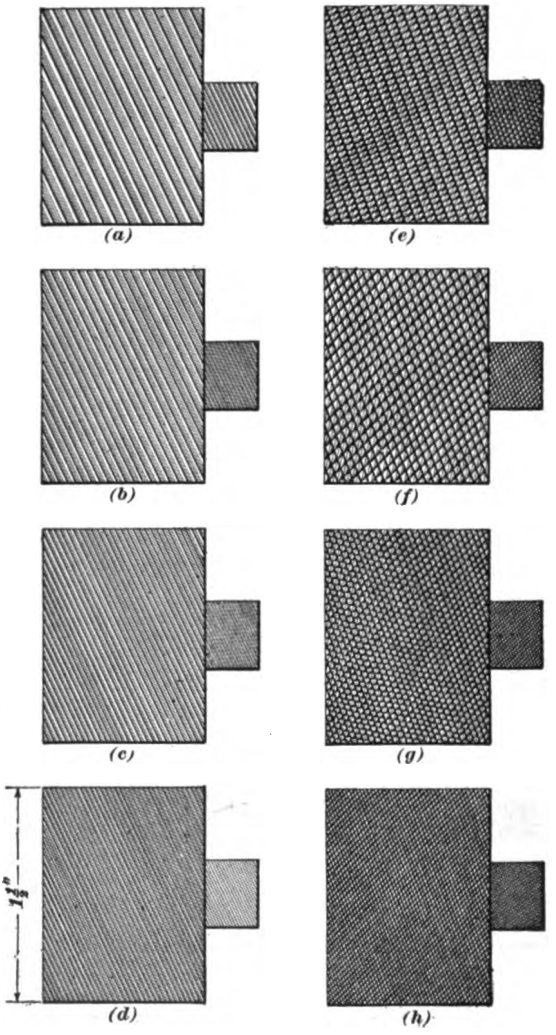

FIG. 48.

making another cut, at an angle to the first, or *over-cut*, a file is produced as shown in Fig. 47 (*b*), and is called a

double-cut. The second, or *up-cut*, is generally cut a little finer and not as deeply as the over-cut. The angles that the two cuts make with the axis of the file vary for different uses, the over-cut ranging from 35° to 55° and the up-cut from 75° to 85°. The up-cut has the effect of dividing the small cutting edges produced by the over-cut into a large number of small pointed teeth. Files thus made in various grades of coarseness give excellent results on the ordinary materials used in machine construction.

69. Coarseness of Cut.—American practice has divided machine-shop files into the following classes, with regard to their coarseness:

Single-Cut. — Rough, coarse, bastard, second cut, and smooth.

Double-Cut.—Coarse, bastard, second cut, smooth, and dead smooth.

The coarse and bastard cuts are used almost entirely on the coarser grades of work, and the second cut and smooth are used in finishing and for the finer classes of work. The rough and dead smooth are rarely used in the machine shop, although occasionally a rough single-cut may be required where much work in lead or other soft material is necessary. The dead-smooth double-cut is occasionally used on extremely fine work, but it is required so rarely that many good mechanics never have occasion to use one.

The coarseness of the cut for each grade varies with the size of file, the cut being coarser on the larger files. Fig. 48 shows the comparative coarseness of 4-inch and 16-inch files, (*a*), (*b*), (*c*), and (*d*) showing the single-cut, rough, coarse, bastard, and second cut, and (*e*), (*f*), (*g*), and (*h*) the double-cut, coarse, bastard, second cut, and smooth.

STYLES OF FILES.

70. Files are divided into three general classes with regard to their cross-sections, viz.: *quadrangular*, *circular*, and *triangular*. Besides these, there are some other

CHARACTERISTICS AND USES OF FILES.

Comparative Cross-Sections of Files.	Name of File.	Common Lengths.	Character of Cut.	Coarseness of Cut.	Shape.	Use.
	Mill file. Mill blunt file. Round-edge mill file.	4 in. to 16 in.	Single-cut.	Mostly bastard.	Taper. Blunt. One or two round edges.	Sharpening mill saws, mowing-machine knives, etc. In machine shop, for lathe work, draw-filing, and to some extent for finishing brass and bronze.
	Equaling file.	6 in. to 12 in.	Double-cut.	Mostly bastard.	Blunt.	For general machine-shop work. (Seldom called for.)
	Flat file. Flat blunt file.	4 in. to 16 in.	Double-cut.	Mostly bastard, many second cut and smooth, some dead smooth	Taper. Blunt.	Used by mechanics generally for a great variety of purposes—one of most common files in use.
	Hand file.	4 in. to 16 in.	Double-cut.	Mostly bastard, many second cut and smooth, some dead smooth	Parallel sides and tapered thickness.	Preferred by machinists for finishing flat surfaces. Its shape and its having one safe edge make it particularly useful where the flat file cannot be used.
	Pillar file.	6 in. to 14 in.	Double-cut.	Mostly bastard, many second cut and smooth, some dead smooth.	Parallel sides and tapered thickness.	For general machine-shop use on narrow work.
	Square file.	4 in. to 16 in.	Double-cut.	Bastard.	Taper.	Almost all branches of mechanical work; principally for enlarging holes of rectangular shape.
	Square blunt file.	10 in. to 20 in	Double cut	Bastard.	Blunt.	For the rougher work in finishing or enlarging mortises and keyways, when of considerable length.
	Round file. "Rat tail." or "mouse tail." Round blunt file.	4 in. to 16 in.	Single-cut (spiral).	Mostly bastard.	Taper. Blunt.	For enlarging round holes and for shaping the fillets on internal angles.
	Half-round file. Half-round blunt file.	4 in. to 16 in.	Double-cut, single cut on convex sides on grades finer than a bastard	Mostly bastard, though many second cut and smooth and some dead smooth.	Taper. Blunt.	Wide use in machine shops.
	Half-round wood file.	8 in. to 14 in.	Double-cut	Coarse.	Taper.	Woodwork generally, occasionally on the coarser kinds of brass work.
	Three-square, or triangular, file.	6 in. to 14 in.	Double-cut.	Mostly bastard.	Taper.	For filing acute internal angles, clearing out square corners, filing up taps, cutters, etc.

miscellaneous cross-sections, but they are not used in machine shops, and will therefore not be considered here.

The accompanying table, which is taken almost entirely from "Filosophy," shows the machine-shop files classed under these various headings, with their description and machine-shop uses, the first column showing the cross-section of each style. Many of these are used for other purposes than those mentioned, only their application to machine-shop work being mentioned here.

SIZES OF FILES.

71. The size of a file is generally indicated by giving the length in inches of the cut part, the tang not being included. Thus, a 10-inch bastard flat file means a bastard flat file 10 inches long from the point of the file to the tang.

BRITISH CLASSIFICATION OF FILES.

72. The classification of files in Great Britain differs slightly from the American classification, while the files of the two principal British makes, the Sheffield and the Lancashire, are slightly different. The naming of the Sheffield files with regard to their coarseness is as follows: Rough, middle, bastard, second cut, smooth, and dead smooth. The finest grade of the Lancashire files is called "superfine," instead of "dead smooth." It will be seen that the "middle" corresponds to the American "coarse."

The degrees of coarseness represented by these various names in the Sheffield, Lancashire, and American classifications differ somewhat, but not enough to cause any material difference in the working conditions. A remarkable degree of fineness of cut has been attained, Lancashire superfine hand-cut files of the smallest size having been made with 300 cuts to the inch.

BENCH, VISE, AND FLOOR WORK.

(PART 2.)

USE OF FILES.

1. Purpose of Filing.—In machine construction there are many instances where parts must be finished by hand. The part may have been finished as far as possible in a machine tool, but the surface could not be made sufficiently smooth, and must be finished by hand; or it may be so located, or of such a character, that a machine tool cannot be used, and the entire work must be done by hand. In the latter case, the excess of metal may be removed with a cold chisel, and the work then finished by filing.

It has already been said that a file consists of a series of minute chisels that are passed over the work by hand, under a pressure that is just great enough to make them cut. For rough work, the coarser grades of files are used; and as the surface becomes smoother, finer grades are used successively.

2. Difficulties to Contend With.—The operation of filing is one of the most difficult of machine-shop operations, and the quality of the work produced depends almost entirely on the skill of the workman. In most machine-shop operations, the tool is guided positively by some provision in

Copyright, 1901, by THE COLLIERY ENGINEER COMPANY.
Entered at Stationers' Hall, London.
All rights reserved.

the machine with which the operation is performed, as in a planer, shaper, or milling machine. In filing, the accuracy of the work depends entirely on the motion of the hands, without any means of guiding the tool positively.

It will be seen, therefore, that skilfulness on the part of the workman is essential to good work, the quality of the file being of secondary importance. A poor workman may be provided with a good file, but his work will not be good, while a good workman may do very good work with a poor tool. In order to do the best work, however, it is necessary to have a good file that is adapted to the work to be done.

3. Advantage of Convex Faces in Files.—To the unskilled it would seem at first thought that a file having a perfectly straight surface, bearing on the work equally at all points, is essential in order to do good work. A little experience will show that this is not true, and that a surface that is slightly convex will produce better results. In filing, the pressure of the hands is put on the two ends of the file, with the result that the spring thus caused tends to make the lower face concave; also, when files are being hardened, they have a tendency to spring, thus making it impossible to produce files that have perfectly straight surfaces.

In filing wide surfaces a perfectly straight file would require a very heavy pressure to make it **bite** (take a cut); while the same file on a narrow surface would bite under a very light pressure. In the latter case, the pressure is concentrated on a few teeth; while in the former it is distributed over a large number, and in order to secure enough pressure on each tooth to make it cut, a very heavy pressure is necessary. It is found in practice that a light pressure with a small number of teeth in contact will produce the best results. By making the files convex, only a few teeth will be in contact at one time, however wide the surface may be. The faces of files are, therefore, made convex for three reasons: to overcome the effect of spring

due to the pressure of the hands, the spring caused by hardening, and to make the file bite on any width of surface.

4. Wooden File Handles.—File handles are generally made by turning a piece of wood to the desired shape, putting a ferrule on the end, and drilling a hole into it to receive the tang of the file. As the sizes of the tang vary for the different forms and sizes of files, the hole must be small enough to receive the smallest file for which it is intended. If the handle is made of a soft wood, the larger tangs may be driven in without splitting it; but when made of hard wood, it is necessary to enlarge the hole to about the right size. This may be done by heating the tang of a worn-out file of the same size as the one being filed, and burning out the hole in the handle. If no old file is available, the tang of the new file may be heated, but care must be taken that the temper of the file is not drawn. This may be prevented by wrapping a piece of wet waste about the file up to the tang. The handle should be driven well up to the heel of the file.

5. Special File Handles.—In filing broad surfaces, as the tops of lathe beds, and in finishing long slots, the ordinary wooden handle cannot be used and other devices have been brought into use. Fig. 1 shows a simple handle

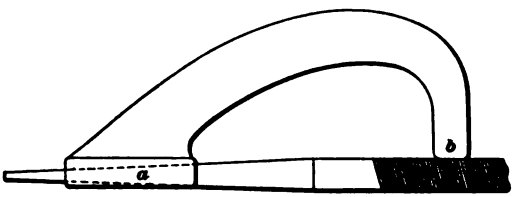

FIG. 1.

that has been found very efficient. The end *a* is formed with a dovetailed slot that slips over the tang, while the point *b* rests upon the back of the file. The slot should be made to fit about the middle of the tang of a 12-inch file.

The foot *a* should be about 1½ inches long and the handle about ⅝ inch in diameter.

6. Another device that is frequently used and that has some advantage over the one just described is shown in Fig. 2. A foot *a* rests upon the file and has a dovetailed slot that catches over the tang. A rod *b* has a lug *c* on its front end that catches over the point of the file. The handle *d* contains a nut that screws on the end of the rod *b*, and

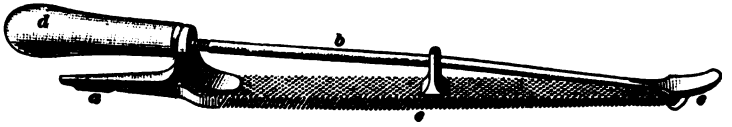

FIG. 2.

by means of which the file is held firmly between the catch *c* and the foot *a*. A column *e* at about the middle of the file makes the device more rigid and prevents the file from springing up in the middle when pressure is put upon it. A projection on the front end of the rod furnishes a convenient thumb rest. This device is used quite largely and has given excellent satisfaction.

7. Holding the File.—It is very important for a beginner to acquire the correct manner of holding the file. A right way is learned as easily as a wrong one, but having once become accustomed to the wrong it is very hard to change to the right. There is some difference of opinion as to the correct way, but the following is considered good practice.

In moving the file endwise across the work, commonly called *cross-filing*, it is generally held as shown in Fig. 3 (*a*) and (*b*); for the lighter grades of work, and in finishing cuts, the former illustration shows the relation of the hands to the file at the beginning of the stroke, and the latter at the end of the stroke. The point of the file is held between the thumb and the first finger, as shown in the two views, while the handle is held by resting the thumb upon it, as shown in these illustrations and in Fig. 4, and letting the end stand against

the palm of the hand, the fingers gripping it lightly. When the work is heavy and a large file is used, the ball of the left

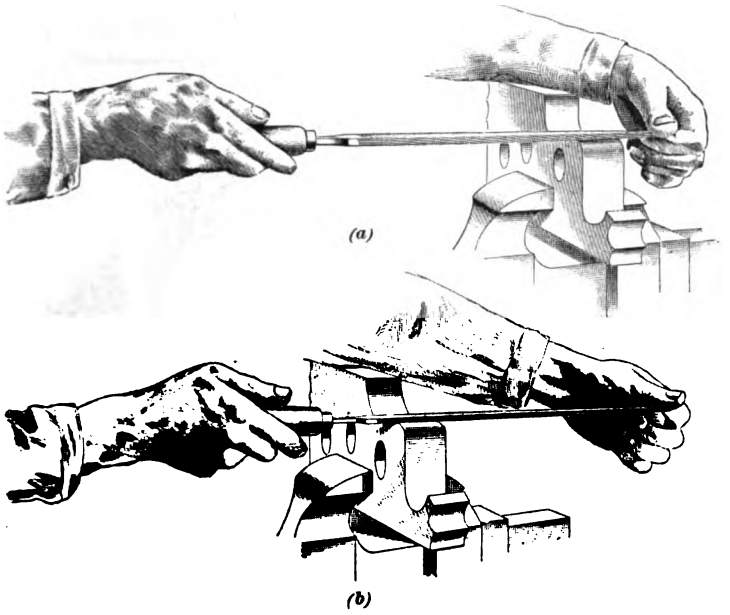

FIG. 3.

hand is placed on the point of the file while the handle may be gripped as shown in Fig. 4. It will be observed that in

FIG. 4.

the latter case the handle is gripped a little farther forwards than in the case of light work.

8. When the file is very thin there is great danger of springing it so as to round the corners. This may be

prevented by holding it as shown in Fig. 5. A downward pressure is put upon both thumbs and an upward pressure upon the fingers of both hands. This pressure is just sufficient to overcome the tendency for the ends to spring

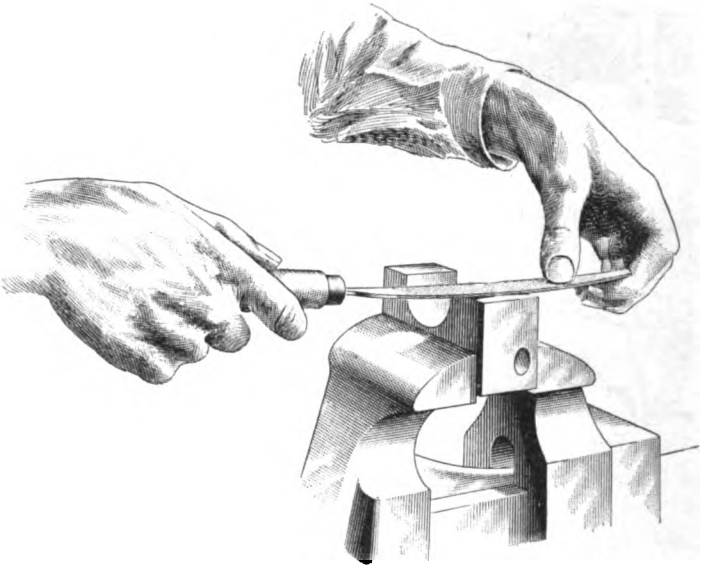

FIG. 5.

downwards. By making the pressure great enough to spring the file downwards considerably in the center, a slightly concave surface may be formed.

It is very difficult, however, to hold a file in this way for more than a few minutes, and it is better to use a heavier file that has considerable convexity and stiffness, whenever that is possible. On very light files spherical handles are often used.

9. For internal work, when the hole is long, it may not be possible to hold the file at the point. In this case a very great strain comes on the wrist of the right hand, which soon becomes tired. This strain may be relieved by placing

the left hand over the right, as shown in Fig. 6. When the work is thin, so that the file will reach through the work far

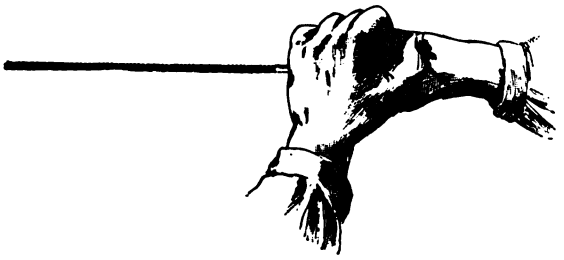

FIG. 6.

enough to take hold of the point, the ordinary method of holding it for outside work is generally used. In draw-

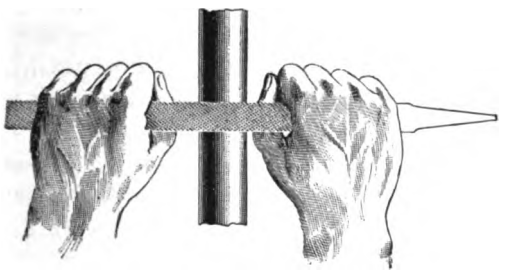

FIG. 7.

filing, the file is grasped at each side of the work, as shown in Fig. 7.

10. Using the File.—Cross-filing, though the most common, is one of the most difficult forms of filing. In moving the file back and forth, there is a tendency for the hands to swing in arcs of circles about the joints of the arms, while the body sways more or less, depending on the work. To overcome these tendencies so as to move the file in straight lines requires a great deal of practice

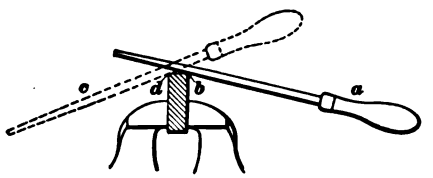

FIG. 8.

and careful observation of the results of certain movements. Filing on narrow work is especially difficult. The work becomes a fulcrum on which the file rests at different points along its course, and if an equal pressure is put on each end, it will tilt first one way, then another, depending on the point of contact and the leverage. For instance, in Fig. 8, when the file is in position *a* there is a tendency for the handle to tilt downwards from the fulcrum *b*; when in the position *c*, represented by the dotted lines, the point tilts downwards about the fulcrum *d*. As the file runs forwards there is, therefore, a tendency to file off the corners more than the middle of the piece and to produce a convex surface. On wide work there is less tendency to do this, and the beginner should, therefore, take his first lessons on work ranging between about 1 inch and 4 inches in width. By persistent care to have the file rest evenly upon the work, he may entirely overcome this difficulty, and not until he has accomplished this should he attempt to file narrow work.

11. In filing broad surfaces, the danger of rounding the corners is reduced to a minimum, but other difficulties present themselves. Files for this class of work have convex faces, and only a few teeth cut at a time. The strokes must then be so gauged that an equal cut is carried across the entire piece. It is evident that if numerous short strokes are made they are liable to overlap each other at some places and not meet at others, and to wear out the files at the middle while the ends are still good. Uniform strokes of as great a length as possible should be made.

When high spots are to be removed, the file must be so held that the teeth over these spots are in contact with the work. By commencing the stroke with the teeth near the point in contact, and lowering the handle gradually to compensate for the convexity, the effective work of the whole stroke may be concentrated upon a small area. On the other hand, care must be taken so that this is not done when it is desired to remove the metal evenly from a broad surface, or a concave or irregular surface will be the result.

In this case the file should move perfectly parallel to the work, or be gradually tilted so as to increase the length of the cut. Great care should be taken in all filing operations, and by constant practice the correct way of doing the work will be acquired and become second nature; whereas a continuous disregard of the correct methods will cause the incorrect manner to become habitual.

12. It will be noticed in filing that small grooves are left upon the work at each stroke, and when the strokes are all made in the same direction these grooves become deeper; this increases the work that is to be done, for these marks must be removed by means of finer grades of files. By changing the angle of the direction of the stroke with the work, at short intervals, this difficulty may be avoided. This, too, will make the file cut more freely, since the grooves running at an angle to the cut cause the file to bite more freely and the particles to be separated more easily. It will also enable the workman to see where the file is cutting and to gauge the stroke so that the desired part of the surface will be removed.

Changing the course of the file as described above is often called **diagonal filing.** The angle that the strokes should make with each other depends on the work. Practice alone will enable one to determine what it should be.

13. In all kinds of filing, there should be just enough pressure put upon the file during the forward stroke to make it cut freely, but there should be no pressure put upon it during the return stroke. The teeth of a file are formed approximately as shown enlarged in Fig. 9. It will be seen that when pressure is put upon the file, and it is moved in the direction of the arrow *a*, the cutting edges are well supported, and the angle of the cutting face and

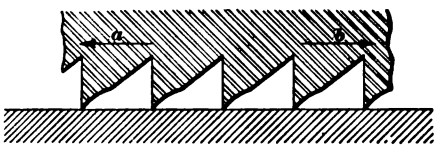

FIG. 9.

the clearance produce very good cutting conditions. When moving in the direction of the arrow *b*, which corresponds to the return stroke, the conditions are reversed. The angles are such that the teeth will simply drag over the work, without cutting, while the edges are not well supported, and any pressure put upon the file will cause the teeth to wear away very rapidly without producing any effect upon the work. In fact, the cutting edges of some of the teeth of a new file may be broken the first minute the file is used and these teeth never do any work again.

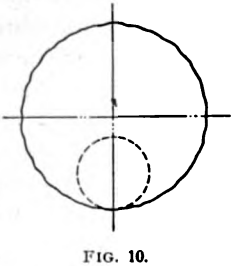

FIG. 10.

14. In filing circular holes, a round file that is as nearly the size of the hole as it is possible to obtain should be used. A small file will tend to produce the ridges shown in Fig. 10; with a larger file that conforms more nearly to the curvature of the hole, this tendency is greatly reduced. When the filing is to be done on an internally curved surface of a large radius, as shown in Fig. 11, a half-round file is used. As in the case of the circular hole, there is a tendency to file unevenly, and a file of as large a curvature as is obtainable should be used. The file should be moved along the circumference of the curve as well as across the work, which gives it a diagonal motion, and in addition to the advantages of diagonal filing on flat surfaces, it prevents the formation of ridges.

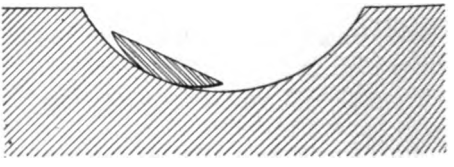

FIG. 11.

15. When it is necessary to form a sharp corner, or to file up to a finished surface that stands at right angles to the one on which the filing is done, a safe-edge file is used, thereby preventing any injury to the finished part. When the corner is to be extremely sharp, a half-round file may be

used, or a flat file may be ground off on one side, to form a safe edge. Either the half-round or a flat file ground in this way has a sharp edge that will permit a sharp angle to be formed. Some forms of triangular files will also make a sharp corner. The other files used in ordinary work are so cut that the corners are either rough or slightly rounded and will not make a clean, sharp angle. When the corners are to be rounded, a round-edge file will give good results.

16. For filing out slots that have been roughed out by drilling, and where the end of the slot is to be rounded, a flat, round-edged file is the most suitable. When the sides have been machined to size and the end of the slot is to be rounded, a round file with the sides ground off to the width of the slot, as shown in Fig. 12, may be used. Two safe edges *a* and *b* are thus formed that will prevent injury to the finished sides.

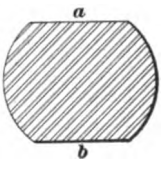

FIG. 12.

17. When the filing is done by moving the file sidewise across the work, it is called **draw-filing.** Fig. 7 illustrates how the file is held, the motion being at right angles to its length. Draw-filing is used very generally in finishing turned work, where it is desired to remove the circular tool marks and lay the marks endwise. Care should be taken to hold the file so that the teeth will cut as it moves away from the body, and to relieve the pressure on the return stroke, as in cross-filing.

In draw-filing, the cut is not as deep as in cross-filing, the teeth standing at such an angle to the direction of motion that a light shearing rather than a cutting effect is produced; very smooth work may be done by this method. A second-cut or smooth file is best suited for draw-filing. On convex surfaces a flat file or the flat side of a half-round file may be used; but in concave work a round file or half-round file will give the best results. When a large amount of metal is to be removed, it should be done by cross-filing, as

the cut in draw-filing is so light that a very great amount of time would be required to remove it by this method.

18. When a better finish is required than can be produced by draw-filing, the surface may be rubbed with fine or worn emery cloth and oil, the cloth being wrapped about a file or a piece of wood, which is used as in draw-filing. The strokes should be made successively along the circumference of a cylindrical piece, in order that the finish may be even. When a very fine finish is required, the draw-filing may be followed by cross-filing with a dead-smooth file, after which it may be rubbed with the emery cloth in the direction in which the draw-filing was done.

19. No attempt should be made to keep the body rigidly in one position while filing, especially on heavy work. A free, easy motion of the body, in the direction in which the file is moving, permits a greater force to be exerted without undue strain. In filing right-handed, the workman stands with his left foot toward the work, and as the file is moved forwards, a slight bending of the left knee will tend to throw the body against and upon the file, thus assisting in making the cut. During the return stroke the knee is again straightened as the body returns. A little practice will show the extent to which this motion of the body can be made to assist in the work.

20. Height of Work.—The height of the work largely depends on the class of filing that is to be done. Ordinarily, the surface to be filed should be about as high as the elbow of the workman. When the work is extremely heavy it should be set somewhat lower, in order that a greater pressure may be put upon it. If the vise or supporting device is too high, a foot-board or low bench may be used to stand upon. The feet of the bench should be set flush with the ends of the board, in order to prevent tipping when stepping upon the ends.

21. Effect of Oil.—The effect of oil on filing varies greatly with different metals and different classes of work.

In finishing broad, smooth surfaces of cast iron, the presence of oil prevents the file from cutting, and causes it to slip over the surface, thus wearing off the sharp points of the teeth.

On cast iron, generally, and especially on the class of work mentioned above, oil should never be used. On the other hand, it may be advantageously used when filing wrought iron and steel, and other hard fibrous materials, especially in finishing surfaces, when the file is new and sharp. Oil prevents the file from scratching and cutting too deeply. Sometimes the teeth are filled with chalk, either dry or mixed with oil; this, to a great extent, prevents the filings from clogging between the teeth. New files are usually sent from the factory covered with oil, to prevent their rusting. For work in which oil is objectionable this must be removed, which is sometimes done by first rubbing off the surplus oil, then coating the file with chalk and brushing it off carefully.

22. Selection and Care of Files.—The life of a file may be prolonged very materially by exercising care in selecting a suitable one for each piece of work, and in using it properly. A new file should never be used on rough cast iron from which the sand and scale have not been removed, nor on narrow surfaces. Both these conditions tend to break and dull the teeth. A well-worn file will do excellent service in both these cases. On narrow work, a worn file will give better results than a new one, the teeth on a new file being so sharp that the few teeth in contact will enter so deeply that they are liable to be injured and to scratch the work. A new file should be used first on brass or wide surfaces on smooth cast iron.

The files most commonly used in the machine shop are the 12-inch and 14-inch flat and half-round bastard, double-cut, and the 12-inch and 14-inch single-cut. The other files mentioned are, of course, needed very frequently for finishing, or for special operations, and should be kept in stock.

One of the most serious troubles to contend with in filing is the tendency to *pin*. The cuttings clog between the

teeth, forming hard, sharp "pins" that scratch the material. This is known as *pinning*, and occurs more readily in some materials than in others. As soon as the slightest indication of pinning is observed, great care should be taken to prevent it. The teeth should be carefully cleaned. Sometimes this may be done by rapping the file against a wooden block or the work bench, or by rubbing the hand over it. In most cases it is necessary to use a wire brush, called a *file card*,

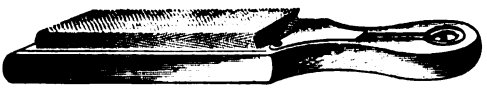

FIG. 13.

shown in Fig. 13. Vigorous brushing in the direction of the teeth usually removes the pins, but in cases where the brush will not remove them, a piece of soft sheet brass, or copper or iron wire flattened out at one end, may be used. The end is pressed crosswise upon the teeth, and moved in the direction of the length of the teeth. Little grooves will be cut into the soft metal, forming small teeth that clean the file thoroughly.

23. Files should never be thrown upon one another, or upon other tools or hard substances. In too many cases files, hammers, cold chisels, wrenches, and tools of all kinds are thrown into a box or cupboard promiscuously, resulting in injury to the files and all other cutting edges, to say nothing of the careless and dilapidated appearance of the place and the time wasted in trying to find anything that is wanted. A tool box or cupboard should always be kept in order. There should be "a place for everything and everything in its place" when not in use. Files should be laid either upon shelves or in a drawer that is provided with small divisions so as not to permit them to rub against each other. They should always be carefully cleaned before they are put away, and kept in good condition so as to be ready for use when they are required.

SCRAPERS AND SCRAPING.

24. Use of Scrapers.—Scrapers are used in machine construction to fit or correct flat bearing surfaces to each other and to make flat or curved surfaces true. These surfaces, when flat, are first planed, or in some cases milled, as true as possible; but owing to the unequal hardness or texture of the material, the possible springing when clamped on the planer or milling-machine table, and the slight wear of the finishing tool, they are never perfect as they leave the machine. Errors in planed surfaces such as the fitter is called upon to correct by scraping are caused in several ways, the most common of which are *wind*, caused by not having the casting or piece firmly bedded on the table; *out of square*, caused by using try squares that are not true; *angles that do not match*, caused by carelessness in setting the head to the angle; *sand holes*, *spots of scale*, and *hard spots* that the tool always jumps or slides over. The errors in planed work should not exceed one or two thicknesses of tissue paper, and if found to be greater the work should be sent back to the planer, unless it is found that the errors are due to hard spots.

KINDS OF SCRAPERS.

25. General Consideration.—The scrapers used on flat and angular work are the flat, the hook, the right-hand hook, and the left-hand hook; and for curved work the half-round and half-round end are much used. For removing burrs and scraping corners and countersunk surfaces, the three-cornered scraper is generally used. The flat scraper is the one most used, as it is the easiest to make, sharpen, and use, and in expert hands it will remove an astonishing amount of surface in a short time, with little effort.

Scrapers are often made of old files, but they do not work well because files are made of a grade of steel, called *file steel*, that can be properly hardened only by the special

processes used by the file manufacturers. The half-round and three-cornered scrapers may be made from any good smooth or dead smooth file that has become too dull to use by simply grinding off the teeth, thus avoiding the necessity of rehardening.

26. Three-Cornered Scraper.—The three-cornered scraper should only be made of a worn-out Stubbs, Grobet, or some equally good make of file. The file should have all teeth ground off and the end sharpened at an angle of about

FIG. 14.

60 degrees. It is best to do the work on a wet grindstone, for if done on an emery wheel and overheated the scraper will be spoiled. The appearance of the finished three-cornered scraper is shown in Fig. 14.

27. Flat Scraper. — The flat scraper, Fig. 15 (*a*), should be made of one of the best grades of tool steel, such as Jessops, or of the special scraper steel furnished by several American makers. It should be made of stock about

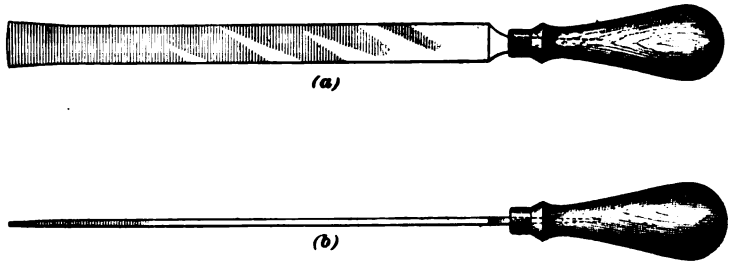

FIG. 15.

$\frac{3}{16}$ inch thick by 1 inch wide, with a tang, similar to that on a file, that is driven into a wooden handle. The cutting edge should be drawn to about $\frac{1}{16}$ inch thick by $1\frac{1}{4}$ to

1⅝ inches wide, and hardened to the greatest possible degree. The sides should be ground flat and the end may be slightly rounded. The end should be ground by moving it back and forth along the rest, past the face of the grindstone, thus making two equal cutting edges, as is shown exaggerated in Fig. 16, which shows the end of the scraper as it leaves the grindstone. The surfaces *a* and *b* are next rubbed on a good oilstone, after which the tool is held in a vertical position so that both of the points *c* and *d* will rest upon the stone, in which position it is rubbed back and forth, which leaves it in the shape shown by the dotted line *e f*. This makes the thin end of the scraper practically flat. It is now ready for use and has an equally good cutting edge on each side.

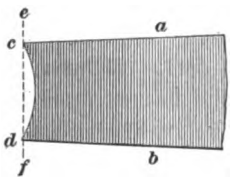

FIG. 16.

28. Bent or Hook Scraper. — The bent or hook scraper is made in the form shown in Fig. 17 (*a*). It should be made with the same care as the flat scraper, and should

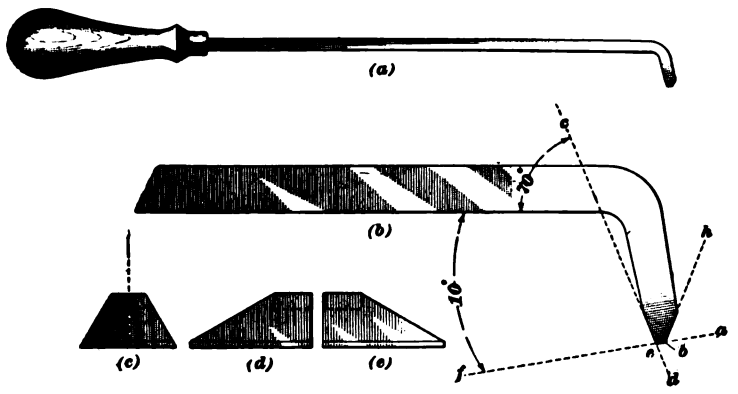

FIG. 17.

be ground to the angles denoted by the lines *a f* and *c d*, Fig. 17 (*b*). The cutting end is made of the form shown at Fig. 17 (*c*). The cutting is done with the edge *c*. The

face *b h* is ground to any convenient angle so as to reduce the area of the surface *b c*, which must be finished on an oilstone. For fitting angular surfaces that cannot be reached conveniently by the straight and regular hook scrapers, the right-hand and left-hand hooked scrapers are made, as shown in Fig. 17 (*d*) and (*e*).

29. Holding the Scraper.—The manner of holding the flat scraper is shown in Fig. 18. The handle is held in the right hand with the thumb extended along the top in order to keep the muscles of the hand and arm in line the same as in filing, thus preventing cramping the hand and tiring the arm. The left hand is applied as near the cutting edge as is convenient, and only enough pressure applied as

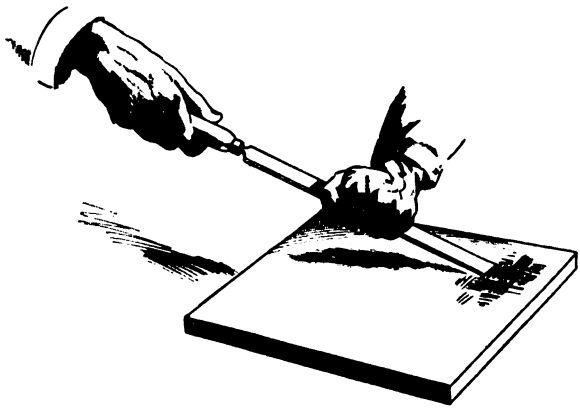

FIG. 18.

is necessary to remove the required amount of metal. The cutting is done by pushing the scraper away from the operator, except where it is used for frosting, flowering, or finishing, when a long handle may be substituted and rested on the shoulder, while both hands are used to pull the tool toward the operator. The hook scrapers are held in much the same way as the flat scrapers, but are pulled toward the workman.

SCRAPING A PLANE SURFACE.

30. Preparation of Surface.—A newly planed surface is scraped in the following manner: The piece is placed on any support that will bring it up to a convenient height for the workman, who first brushes off any dust or dirt that may be on the surface. He next runs a smooth or dead-smooth file over the surface, to remove any burrs or fuzz that may be on it, and he also touches off any marks that would indicate that a sand hole or hard spot had left a high spot or spots. He next takes a surface plate and wipes its surface clean and then puts a coating of marking material all over its face.

31. Marking.—This marking mixture may consist of any red or black mixture that is not gritty. In some cases, special mixtures are furnished by the shop management and their use insisted on. The marking is rubbed, with the hand, into a thin coating as evenly as possible over the plate, which is now ready for use. For marking it is well to mix some red lead with oil in a tin box that is provided with a cover, so that the mixture can be kept clean and free from grit. Lard or machine oil may be used with the lead. Venetian red is sometimes used instead of red lead, and is better on account of its being much finer.

32. Applying the Surface Plate.—The surface plate is placed face down on the work and rubbed back and forth a few times over the entire surface. No pressure is necessary, the weight of the plate being sufficient. When the plate is removed, irregular patches of the marking material will be found on the work. These places indicate high spots in the surface and they are removed with a few strokes of the scraper. The workman now wipes his hand clean of grit and rubs it over the entire surface of the surface plate, to smooth the marking, and then rubs the plate over the work again. More bearing spots will be shown this time and are removed with the scraper. The work proceeds in this manner until the entire surface is covered with bearing marks, when the surface may be called true.

The marking material, in addition to showing the high spots on the work, acts as a lubricant and prevents undue wear on the plate or the cutting or scoring of either work or plate. The truer that the surface operated on becomes, the thinner should be the coating of marking on the plate.

For some purposes the marking does not afford sufficient lubrication, and additional oil would prove detrimental to the work. This difficulty may be prevented by using a plentiful supply of turpentine on the surfaces while they are being rubbed together. In addition to lubricating the surfaces, it also facilitates the work of scraping.

33. Proper Angle for Scraper.—The flat scraper is usually held at an angle of about 30 degrees to the surface of the work, but this angle may vary with the material scraped and the condition of the cutting edges. No definite angle can be given for other types of scrapers; it must be determined by trial, with each scraper and each class of work.

HAND DRILLING, REAMING, AND THREAD CUTTING.

REAMING.

34. Object of Hand Reaming.—The continued use of machine reamers dulls their cutting edges and at the same time slightly reduces their diameter. For some work, a hole $\frac{3}{1000}$ inch under size, such as would be produced by a worn reamer, would not be objectionable, but in addition to being small the hole will be comparatively rough. These defects may be overcome by hand-reaming the hole.

35. Ordinary Hand Reamer. — The hand reamer shown in Fig. 19 illustrates one form of this class of tools. The body *a* is finished to the correct standard size and the shank is made of such size that it will act as a guide when

the hole to be reamed is longer than the fluted part *a*. A groove *c*, turned about one diameter from the lower end, serves as a stopping place for the wheel while grinding, and below this the diameter is about $\frac{3}{1000}$ inch smaller than at *a*. From the point *c* to *d*, about one diameter, the reamer is tapered up to the full size, and from *d* up it is parallel. The hand reamer is used, as its name implies, only by hand. The end *e* is entered into the hole left small by the undersized machine reamer and acts as a guide, and the taper

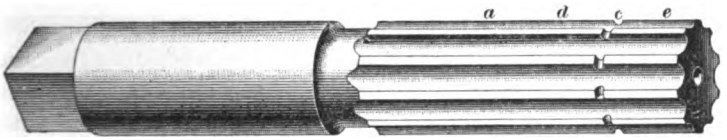

FIG. 19.

from *c* to *d* removes the stock, while the parallel part *a* maintains the size. The small amount removed insures the durability of the tool and the smoothness of the hole. For cast iron and brass the reamer should be entered and twisted through the hole, using enough pressure to force it through quickly. In the case of cast iron, the use of oil will give a smoother hole than can otherwise be obtained. For wrought iron and steel it should be well oiled with lard oil.

36. Step Reamer.—The reaming of taper holes, particularly large ones, in tough and hard metals is greatly facilitated by using the step reamer illustrated in Fig. 20. The small end *a* of this reamer is made the size of the small

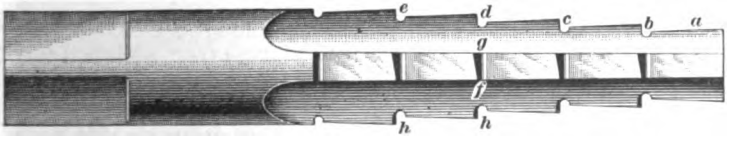

FIG. 20.

end of the hole and a drill of corresponding size put in as far as the hole is to go, when the step reamer is started in and run to the depth required. This reamer cuts only on the

end of each step, as at *b*, *c*, etc., and the diameter of the reamer is slightly less at the top of each step than at the lower end; as, for instance, the diameter is smaller at *c* than it is at *d* in order that the tool may not bind in the hole. Clearance is also given the cutting edge from *f* to *g*. This reamer is cut with four flutes, and, therefore, four sets of cutting edges. The half-round notches *h* are cut to make a stopping place for the wheel while grinding. The use of this reamer does away with the necessity of using a number of different sized drills to prepare the hole for reaming. After the step reamer has removed the stock, a notched taper reamer is run in to remove the steps, and after that the finishing reamer smooths the hole. Step and taper reamers intended for use in the lathe or by hand are provided with square shanks, but when made for use in drilling or boring machines they must be provided with taper shanks.

37. Taper Reaming. — Taper holes are frequently hand-reamed to make them of the correct size and smoothness. This is done after the stock is removed by the roughing and finishing reamers. The taper hand reamer, when not in use, should be kept in a box or tied up in a heavy paper covering, as any nick or dent on its cutting edges will seriously mar the hole. The taper hand reamer must be used with great care. It should be carefully placed in the hole, well oiled, if in wrought iron or steel, and turned with enough pressure to insure its cutting from the very first, as turning a taper hand reamer in a hole when it does not cut will soon ruin it.

Valve bushings, which must be perfectly smooth and parallel internally, are often reamed with undersized machine reamers and then forced into place, after which a hand reamer is run through them to correct their defects.

38. Advantage of Vertical Reaming.—All reaming, whether hand or machine, is better if done in a vertical position. This is so because the weight of the reamer tends to ream downwards and so either carries the reamer out of line or tends to take more out of the bottom side of

the hole when the hole is horizontal. Also any chips or cuttings fall out of the vertical hole, but in the horizontal hole they remain between the teeth of the reamer and often scratch or score the work.

39. Example of Vertical Reaming.—A good example of vertical hand reaming is shown in Fig. 21, which shows the practice of a prominent engine builder. The pulleys for these engines are first put upon the boring mill and turned to $\frac{1}{16}$ inch over the finished size and the hole

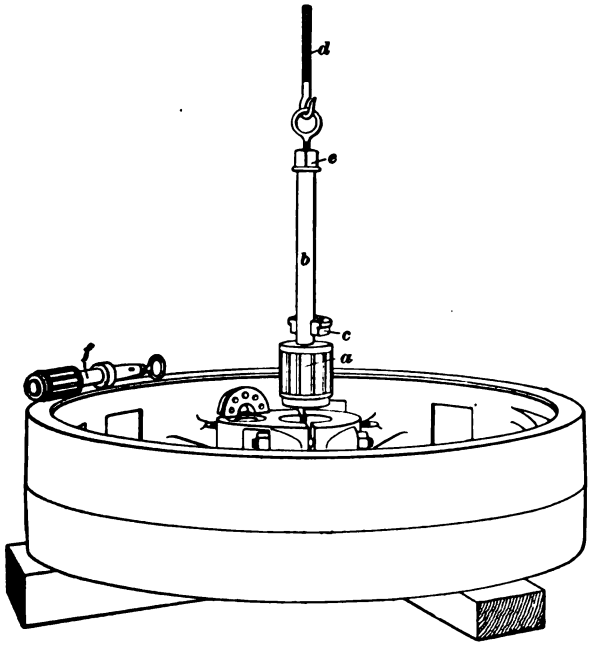

FIG. 21.

bored about $\frac{1}{32}$ inch small and hand-reamed to size, after which the wheel is put on a mandrel and the face turned true and to size. The reaming is done in the following manner: The wheel is placed on blocks, as shown, and the reamer's shank *b* is passed up through the bore and hooked to the threaded rod *d*. A split bush *c* is placed around the shank *b*

and pushed down into the bore to act as a guide. A double-end wrench is placed on the square of the shank at *e* and two men walk around the wheel to turn the reamer. The threaded rod *d* passes through a nut, not shown in the cut, and this feeds the reamer *a* upwards through the hole. Another finishing reamer is shown at *f*. The reamer *a* is shown just as it leaves the finished hole.

40. Reaming Holes in Line.—Holes may be reamed in line in the following manner: The holes in two or more castings that are to be bolted together are first laid out as close as possible to their correct location and all the holes in one piece are drilled and reamed to size and the corresponding holes in the next piece are drilled about $\frac{1}{8}$ inch smaller; then the two castings are clamped together in their correct position and a reamer the same size as the reamed hole, which will cut only on its end, is put through the reamed part of the hole and ratcheted through the smaller hole, thus bringing them perfectly in line. This work must often be done in very contracted or limited spaces, and for such work special reamers, called rose bits or rose reamers, must be made.

TAPPING.

41. General Consideration of Tapping. — Holes are threaded in three ways: First, by cutting in the lathe; second, by using a special tapping fixture in the drilling machine, and, third, by hand. The first two methods, which have been considered elsewhere, provide their own means of keeping the tap square with the work, but in hand-tapping much depends on the skill of the workman.

42. Squaring Tapped Holes.—Two sorts of hand taps are in common use. The first, Fig. 22 (*a*), is made with a parallel end *b c* the size of the bottom of the thread. This parallel end fits the hole made by the tap drill, so that by the exercise of a little care on the part of the user a squarely tapped hole is the result.

The other sort, Fig. 22 (*b*), is tapered from *d* to *e*, consequently it will not stand square with the hole. To tap a hole square, the tap should be well oiled, placed in the hole,

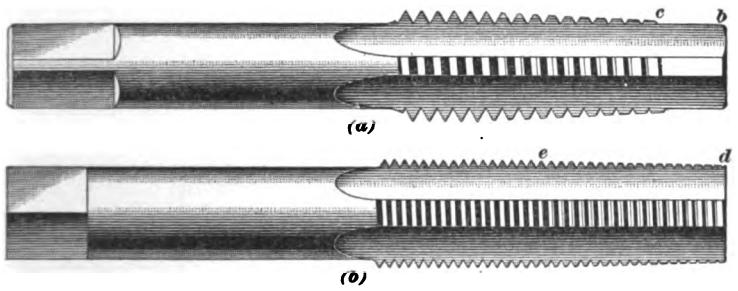

FIG. 22.

and given two or three turns with a double-ended wrench. At this point remove the wrench and apply a square to the tap in the manner shown at *a*, Fig. 23. Try the square at the next flute and if the tap shows out of square, apply pressure enough sidewise upon it with the wrench while turning to bring it square with the surface. Repeat these trials until the tap is found to be square. If a square is not at hand, a wide 6-inch steel rule may be used instead, as at *b*, Fig. 23. The tap shown in Fig. 22 (*a*) will go in reasonably straight, but the beginner will do better work with it by using the same precautions as with the other style.

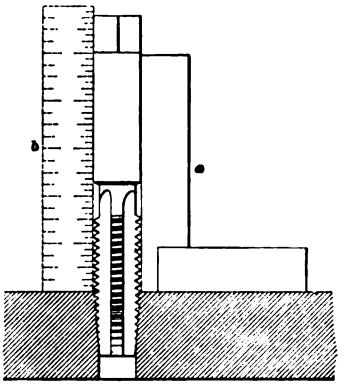

FIG. 23.

43. Tapping Jig.—The tapping jig shown in Fig. 24 is sometimes used. It consists of a piece of iron or steel bent to the form shown at *a*, Fig. 24 (*a*). The bottom surface *b c* is planed flat and a hole *d* the size of the tap

shank is drilled square to *b c*. A plug *e* is turned to fit *d* and the hole *f* to be tapped. To use this tool or jig, put the plug into the hole *d* and then push it into *f*, as shown; clamp the jig *a* fast at the point *g* and see that the plug *e*

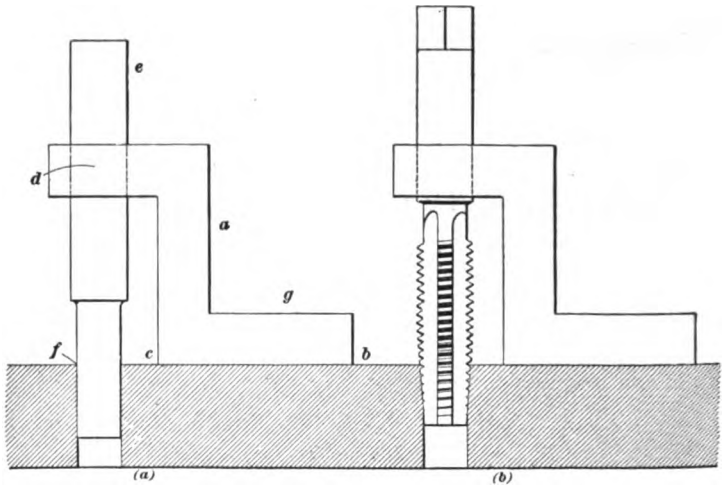

FIG. 24.

fits easily in both holes; remove the plug and replace it with the tap, which will be held in the correct position to tap the hole, as shown in Fig. 24 (*b*). The hole *d* in the jig may be made as large as the largest tap that can be used with it, and bushings made to fit it for using taps having smaller shanks.

44. Producing Smooth Threads.—It is sometimes desirable to tap holes with particularly smooth threads. This may be done by first tapping the hole with a V-thread tap and then following it with a tap having the United States standard form of thread. The V-thread tap will leave enough material so that the United States standard thread tap will perform the same work in the tapped hole that the hand reamer does in the plain hole.

45. Number of Taps Necessary.— Ordinary holes in thin stock may be tapped in one operation by running the taper tap clear through the piece, but if the hole is of great

depth, or of hard material, a second, or plug, tap must be run down to relieve the long cut made by the taper tap. By using these two taps alternately, holes may be tapped to any depth that the taps will reach. Neither the taper nor the plug taps will thread a hole clear to the bottom, so when this is necessary a third tap, called a *bottoming tap*, is screwed clear to the bottom of the hole. Care should be taken in using this tap, as the end teeth are easily broken by the heavy cut.

46. Pipe Threads. — The threads on pipe are of the V type, and to insure tight fits the threaded parts are made tapering. The standard taper for the threaded portion of pipe is $\frac{1}{16}$ inch to the inch or $\frac{3}{4}$ inch to the foot. The holes to be tapped for small sizes of pipe are usually drilled to the size of the bottom of the thread at the small end of the tap, and then the pipe tap run down to the proper depth; but for the large work, a reamer having the same taper as the tap is run in to take out some of the stock. This reaming leaves the right amount of stock for threading and saves unnecessary wear on the tap.

WRENCHES.

47. Double-End Wrench. — The wrenches used for turning taps and hand reamers are made in a great variety of forms. Some are made solid, with one or more holes for different sized shanks, but the best wrenches are made of

FIG. 25

the form shown in Fig. 25. This wrench is adjustable to several different sizes of tap squares. The length of the handles of different wrenches of this type are proportionate to the diameters of the taps on which they may be safely

used. Holes must frequently be tapped in spaces where wrenches of this type cannot be turned and the single-end wrench must be substituted; but where practicable an extension should be placed on the tap and a double-end wrench used, as by this means holes can be tapped more nearly true and the danger of breaking the tap is reduced to a minimum.

48. Special Double Wrench. — Special forms of wrenches are sometimes made for special work. The wrench shown in Fig. 26, which is commonly used in the boiler shop, and, sometimes, in the machine shop, may be taken as an illustration of the class and may suggest others that are suitable for other special operations. The tap wrench illustrated in Fig. 26 is called a *staybolt tap wrench* and is made

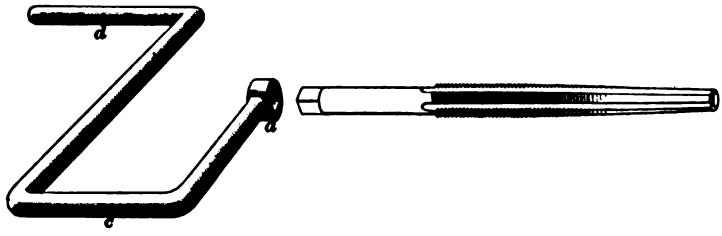

FIG. 26.

of $\frac{3}{8}$-inch round steel bent to the form shown. The square hole *a* is provided for the special staybolt tap shown. Two handles *c* and *d* are formed by the bends shown, and by using both hands, the tap may be given a continuous rotary motion. Whenever possible, these taps are screwed clear through and taken out on the other side, instead of screwing them back again, as is done with the ordinary hand tap.

49. Single-End Wrenches. — Single-end wrenches are made both open and closed; that is, they are so arranged that they simply enclose three sides of a square nut, or four sides of a hexagonal nut, or are so made that they entirely surround the nut. The open-end wrenches have certain advantages in that they do not have to be slipped over the end of the bolt or nut; they are made both with

the sides of the jaws parallel to the line of the handle and with the sides of the jaws set at an angle to the center line of the handle.

For some purposes the straight wrench with the sides of the jaws parallel to the handle, as illustrated in Fig. 27, is suitable, but for work in contracted spaces it is best to give a wrench intended for hexagonal heads or nuts an offset, as shown in Fig. 28. This offset should be 15 degrees. The manner of using the wrench is illustrated in the four views in Fig. 28. In Fig. 28 (*a*), the first hold is shown, the wrench *a* being placed upon the nut *f*. In this case, the wrench

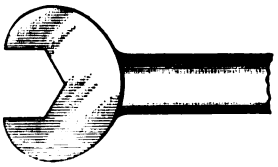

FIG. 27.

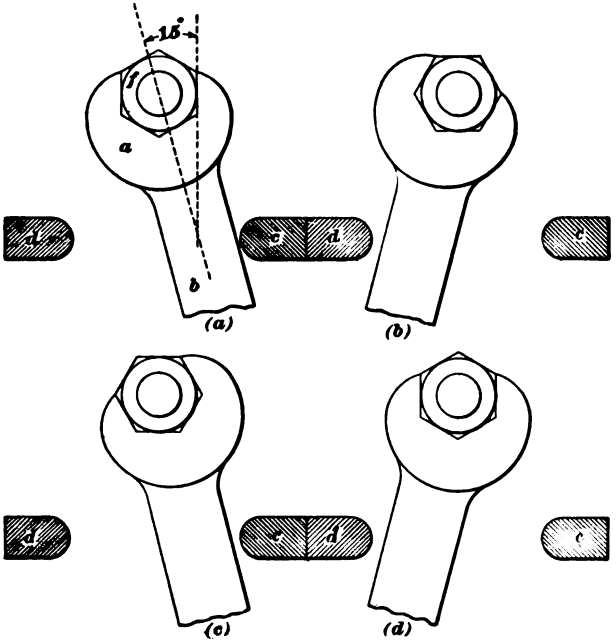

FIG. 28.

handle *b* operates between the obstructions *c* and *d*. The wrench is first placed as shown in Fig. 28 (*a*) and the handle

moved to the left into the position shown in Fig. 28 (*b*). The wrench is then turned over and placed upon the nut as shown in Fig. 28 (*c*), when it may be given another movement, bringing it into the position shown in Fig. 28 (*d*). This will have advanced the nut one-sixth of a revolution in two moves, from which it will be seen that 12 movements are necessary to make a complete revolution; as there are 360 degrees in the whole circle, it is evident that the nut is moved 30 degrees at each stroke of the wrench. If the wrench were made straight, as shown in Fig. 27, it could not be operated in the manner illustrated in Fig. 28, but the nut would have to be so located that there would be a clear space in which the wrench could make one-sixth of a revolution.

50. The open-end wrench is especially adapted for screwing on nuts, screwing in cap bolts, etc., but for operating taps, a closed or solid-end wrench similar to that shown in Fig. 29 is required. These may be made with the sides of the jaws parallel to the handle, as shown in Fig. 27, or they may be made with the sides offset, as shown in Fig. 28. If the wrench is intended for a square-end tap, the offset should be one-half of 45 degrees, or $22\frac{1}{2}$ degrees, as shown in the illustration. This will enable the operator to advance the tap only $\frac{1}{8}$ of a revolution in case there are obstructions so placed that it is impossible to make a greater fraction of a turn than this.

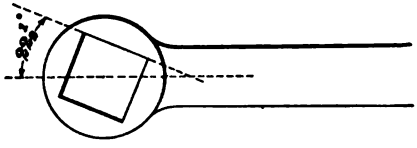

FIG. 29.

51. Socket Wrenches.—The most common form of socket wrench is illustrated in Fig. 30 (*a*). It is used to turn nuts and boltheads set in recesses below the surface of the work, as illustrated in Fig. 30 (*b*). These wrenches are made with either square or hexagonal sockets, as the work may require. The sockets are made by laying out the desired form on the end, drilling one or more holes to remove the majority of the stock, in the case of a large

wrench chipping out some of the remainder of the stock, and then broaching the hole to the desired form. The socket wrenches may be made with the sides of the opening in the end of the wrench parallel or perpendicular to the handle *b*, Fig. 30 (*a*), which will give results similar to that shown in the open-end wrench in Fig. 27, or they may be made with a 15-degree offset for hexagonal wrenches and 22½ degrees offset for square wrenches, as illustrated in Figs. 28 and 29. The offset is generally not as important in the socket wrench as in the solid-end or open-end wrench, on account of the fact that the shank *c*, Fig. 30 (*a*), of the wrench is usually made long enough to clear all obstructions.

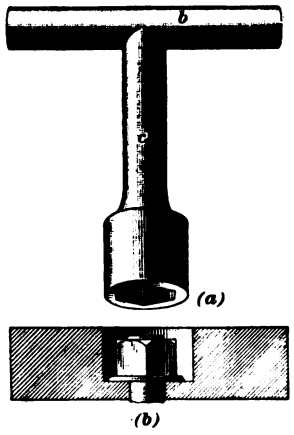

FIG. 30.

52. Socket Extensions for Wrenches. — When it becomes necessary to tap holes in contracted spaces, or to screw in studs or bolts in such locations, it is sometimes possible to reach the work by means of a socket extension similar to that shown in Fig. 31. This consists simply of a long stem *a* having at one end a socket *c*, of the form required to fit the work, and a square *b* on the other end intended to fit any ordinary double-end or single-end wrench. Usually these socket extensions are used only with double-end wrenches.

FIG. 31.

53. Ratchet Wrenches.—In the case of practically all single-end wrenches, it is necessary to remove the wrench and replace it on the nut after a portion of a revolution has been made. As there are a great many places where nothing but a single-end wrench can be used, much valuable time is lost in this changing of

the wrench. To overcome this difficulty, ratchet wrenches have been introduced. A good type of adjustable ratchet wrench is illustrated in Fig. 32, in which the jaws *a* can be adjusted by means of the screws *b* so that they will accommodate a number of sizes. A handle *c* can be moved forwards through whatever portion of a stroke the location

FIG. 32.

will permit, and then return for another stroke. It is possible to make as small a fraction of a revolution as one tooth of the ratchet shown at *d*. This style of ratchet wrench has but a single pawl engaging the ratchet and, hence, there is bound to be some lost motion before the pawl takes hold of a tooth on the forward stroke.

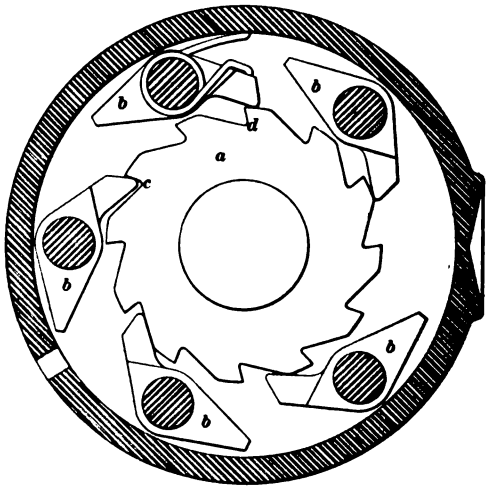

FIG. 33.

54. It is advantageous to have the teeth of the ratchet as coarse as possible, so as to give them the requisite

strength; in order to obtain the effect of fine teeth, which give the least amount of lost motion, the multiple-pawl ratchet has been introduced in some cases. This is illustrated in Fig. 33, in which the ratchet *a* has 12 teeth; 5 pawls *b* are so placed that only one of them will engage a tooth at a time, as shown at *c*. By moving the pawls back $\frac{1}{5}$ of a space between the teeth, the next pawl will come in contact, as at *d*, and, hence, the lost motion cannot be greater than $\frac{1}{5}$ of $\frac{1}{12}$, or $\frac{1}{60}$, of a revolution.

55. For driving studs by means of a ratchet, a special stud holder is provided, as shown at Fig. 34. The stud *a* is screwed into the socket *b* and then the point of the setscrew *c* is run down against the end of the stud so as to lock

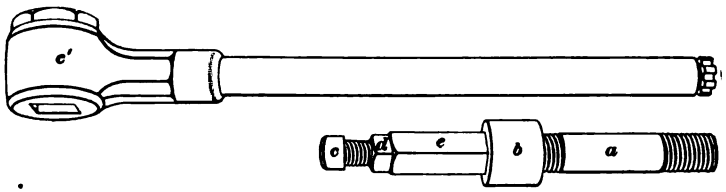

FIG. 34.

it in the socket. The setscrew *c* is held in place by means of a locknut *d*. A stud driver is operated by means of a ratchet on a square *e*. This style of stud driver is ordinarily used in a very thin ratchet, as shown at *c'*.

Ratchets may also be applied to socket-extension wrenches where these must be used in locations in which a complete revolution cannot be made. The time saved in putting the studs into a single large engine will usually more than pay for the price of a ratchet wrench and suitable stud driver.

OUTSIDE THREAD CUTTING.

56. Die Stock and Square Dies.—Outside threads of various pitches and sizes must often be cut by hand with dies that are made of various forms and sizes, to cut threads on pieces ranging from $\frac{1}{16}$ inch to 2 inches in diameter. A

form of stock and die that has many advantages is shown in Fig. 35 (*a*). The stock *a* has an oblong opening *b* provided with guides for holding the split die *c*, which is closed by a setscrew. The form of these dies is shown in Fig. 35 (*b*). They are so constructed that the cutting is done at the points *f*, which also steady the dies when starting on the work. Bolts can be threaded standard, undersize, or oversize with these dies. For example, a No. 14 screw, a $\frac{1}{4}$-inch, or a $\frac{9}{32}$-inch screw, all 20 threads per inch, could

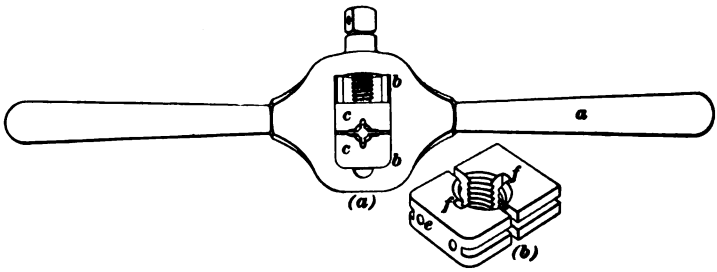

FIG. 35.

be fitted with one pair of dies. They may be made in any size and should be tapped with an oversize tap in order to provide clearance. These dies are especially adapted to repair work where the variety of work is great and the quantity small. With these dies several cuts must be taken to cut a full thread. A pair of blank dies with suitable notches cut in them, used in this stock, makes an excellent tap wrench.

57. Die Stock and Round Dies.—Standard work is best done with one of the many forms of round dies, one of which is illustrated in Fig. 36 (*a*), (*b*), and (*c*). When in use the die is held in a die stock, of the form shown in Fig. 37. The die is made of two parts *a* and *b*, Fig. 36 (*a*) showing the two parts in place, Fig. 36 (*b*) the die with one part removed, the latter being shown detached in Fig. 36 (*c*). This die can be adjusted within narrow limits, the screw *d* being made with a tapered head, and by turning it in, the two halves are forced apart.

The die stock, Fig. 37, is provided with a thumbscrew that grips the die when in place. The lower part *c*, Fig. 36 (*b*), of

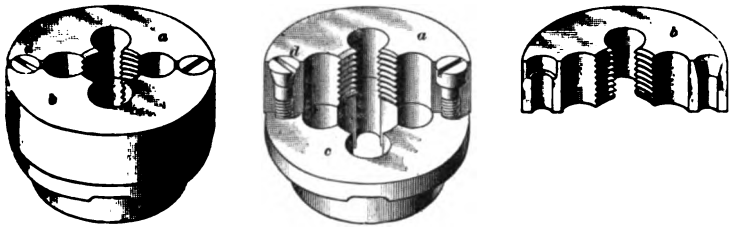

FIG. 36.

this die is bored out to the exact size of the rod to be threaded and forms a guide for the die in starting. These dies require some pressure to start them, but once started they cut a

FIG. 37.

full thread at one operation. The large sizes are made with inserted chasers that are adjustable for wear and if broken may easily be replaced.

PIPEWORK.

58. General Consideration.—Pipework enters largely into some branches of machine work, and a few of the principal tools used in this connection will be illustrated and described. Pipe is made in lengths of from 15 to 20 feet. It is threaded on both ends at the pipe mill and a sleeve screwed on one end. Large pipe has a ring screwed on the other end to protect the threads during shipment and handling.

59. Cutting Pipe. — Many different lengths of pipe are required, so the full-length pieces are cut off to the

required length. Large pipe is generally cut into the proper length in a pipe-cutting machine by a cutting-off tool, in the same manner that stock is cut off in the lathe and afterwards is threaded in the same machine. Some pipe machines are driven by hand, others by power. A great deal of small pipe is cut with a pipe cutter, shown in Fig. 38. The body *c* of this tool carries a slide *e* operated by the screw on the handle *f*. Three hardened-steel cutting wheels *a*, *b*, *d* are set in the frame and slide. The slide *e* is drawn back by

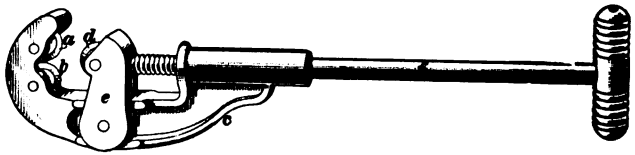

FIG. 38.

means of the screw to allow the pipe to go in between the cutters, which are then forced into the pipe by turning the handle, and at the same time rotating the tool around the pipe. Other cutters of this sort are made that have but one cutting wheel, which is in the slide. A hack saw makes a good pipe cutter, if used carefully, and by using blades having 25 teeth per inch there is little danger of breakage. Thin brass and copper tubing can be cut easier by this means than by any other.

60. Threading Pipe. — When the pipe is cut to the correct length, it must be threaded. This is done, as has been said, in power-driven machines for the large sizes, but most of the small pipe threading is done by hand with one of the various forms of pipe dies.

61. Pipe Stock.—The ordinary pipe stock is shown in Fig. 39. This stock has a body *d* into which handles *b*, *c* are screwed at each end. It has a square recess *d*, Fig. 39 (*c*), in the top to hold the die *a*, Fig. 39 (*a*). A cover *d*, Fig. 39 (*d*), slides over the die to hold it in place. For threading the larger sizes of pipe, the stock is threaded internally and the bushing *c*, Fig. 39 (*d*), is screwed into it.

The thread is 11½ per inch for sizes up to and including 2 inches, and above that 8 per inch, to correspond to the standard pipe threads. A bushing, or thimble, *h* having a hole through it of the size of the outside diameter of the pipe is placed in the bushing *e* and the whole slid over the end of the pipe so that the cutting edges of the die rest on the end of the pipe. The bushing *e* is made fast to the pipe

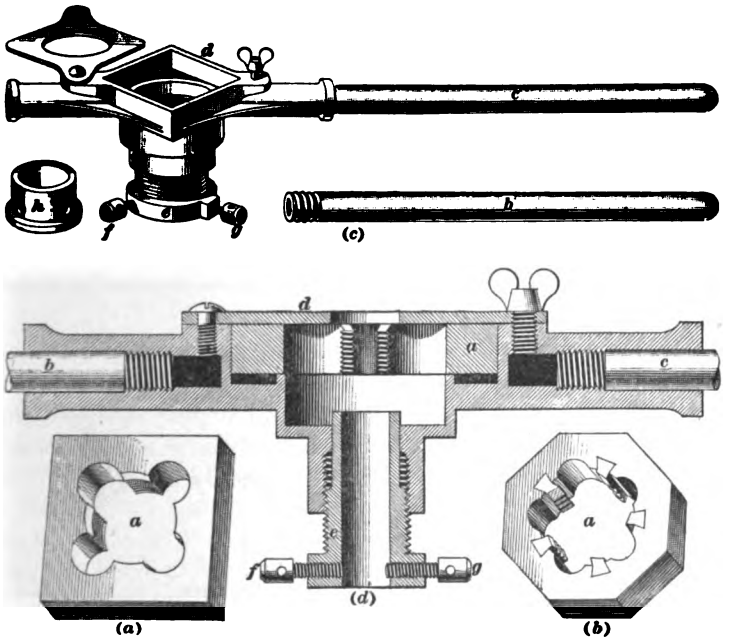

FIG. 89.

by a setscrew *f* and *g* and the stock given a few turns to start the die on the pipe, the screw thread in the stock acting the same as the leadscrew in a lathe. As soon as the die has a good start, the setscrew holding the feeding screw may be loosened and the work finished without it. The small sizes of pipe are threaded in the same manner, but the die stock is made without the feed or leadscrew.

62. The Armstrong pipe die is an adjustable die made in two parts. The stock is provided with the usual handles

for turning and the thimble for guiding the dies on the pipe. This tool is made in the form shown in Fig. 40. The dies *a* are held in the stock *b* by means of the clamp screws *c* and are adjusted to cut larger or smaller than the standard by

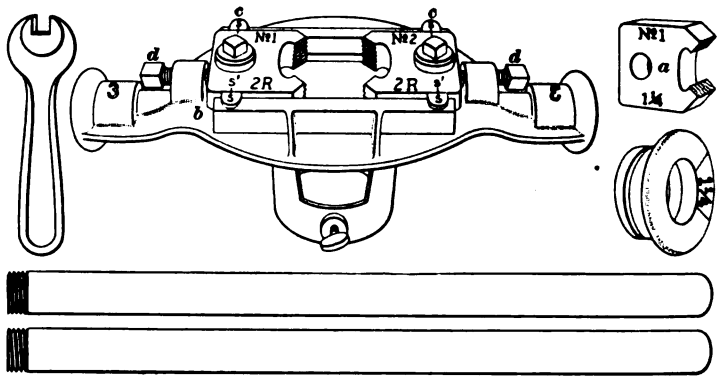

FIG. 40.

the adjusting screws *d*. Lines *s* are cut in the stock and corresponding lines *s'* are placed on each die, so that when these lines coincide the dies are set to cut pipe to the standard size. These dies are more easily sharpened than are the solid ones, which makes them decidedly superior.

PIPE VISES AND WRENCHES.

63. General Consideration.—Pipe, being round, cannot be screwed together by the ordinary forms of wrenches,

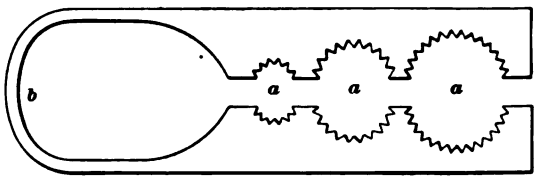

FIG. 41.

and being hollow it cannot be held in the ordinary vise without being crushed. For cutting, threading, or having

fittings screwed on, pipe may be held in a pipe vise or in an ordinary vise having clamps made in the form shown in Fig. 41. The holes *a* in this clamp are made to fit the outside diameter of the pipe and have teeth cut in them to prevent the work from slipping. They are held together by the spring *b*. For putting polished pipe together, some form of clamp or wrench having smooth jaws must be used.

64. Pipe Tongs.—Ordinary iron pipe is screwed together with wrenches of various forms. The principal forms used are shown in the following illustrations: Fig. 42 shows the most common forms commonly called *pipe tongs*, and one

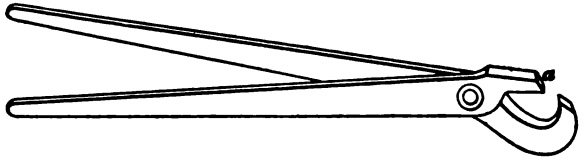

FIG. 42.

size must be provided for each separate size of pipe. This general style is also made with the jaw *a* adjustable and controlled by a screw so as to adapt one pair of tongs to several sizes of pipe.

The chain tongs shown in Fig. 43 are especially adapted to work on large pipe. The handle *e* has two steel jaws *a* cut on both sides. A chain *b* made fast to the bolt *c* permits both sides of the jaws to be used. Wrenches of this

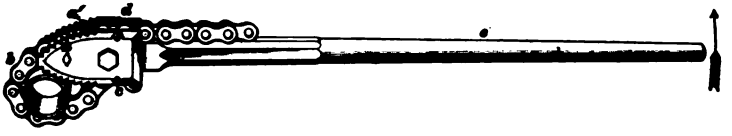

FIG. 43.

type are made of various sizes for use on all sizes of pipe. Chain tongs are the most rapid and economical tools of their kind for medium and large work.

65. Pipe Wrenches.—The Stillson pipe wrench illustrated in Fig. 44 is an adjustable wrench. It has a movable

jaw *a* moved by the milled nut *b* and may be used on a variety of sizes. It is made particularly for pipework, but finds

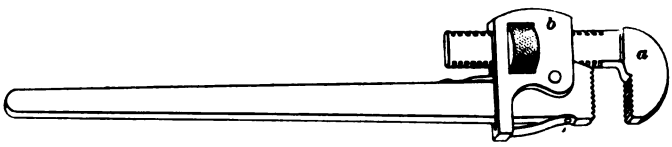

FIG. 44.

many other useful applications. Alligator wrenches have a V-shaped opening in one end, or in the smaller sizes in

FIG. 45.

both ends. One side of this opening is left smooth and the other has teeth cut across it in the form shown in Fig. 45.

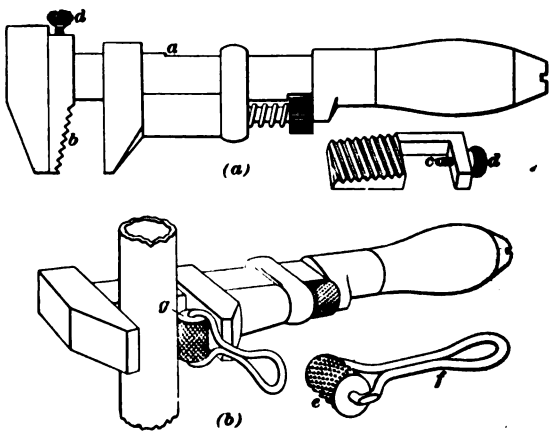

FIG. 46.

These wrenches grip all round objects and are often used to grip pipe in places where the other forms of wrenches can get no hold at all.

A wedge-shape piece of steel, as *b*, Fig. 46, having teeth cut on it similar to those on the jaw of an alligator wrench, may be made for any size of monkeywrench. The jaw may be made in the form of a fork, the two arms of which reach past the bar of the wrench and have a hole through their ends so that a split pin can be put through them to keep the jaw from falling from its place on the bar.

Fig. 46 (*a*) shows a monkeywrench *a* having a manufactured jaw *b* on its bar. This jaw differs from the shop-made jaw in having only one arm, which is bent at right angles to pass over or around the back of the bar, as shown at *c*. A thumbscrew *d* is used in this jaw, instead of the pin, to hold it on the bar.

Fig. 46 (*b*) shows a simple attachment for adapting a monkeywrench to pipework. This consists of a nurled and hardened cylinder, or roller *e*, having a wire handle *f* for convenience in putting it in place. It is placed between the wrench jaw and the pipe, or other round piece, as shown at *g*. A piece of 10-inch or 12-inch round file about 1 or 1½ inches long may be used instead of this attachment.

66. Use of Rope as Pipe Wrench.—A rope may be used in place of a pipe wrench, if a suitable wrench or tongs is not available. The manner of making and using such a

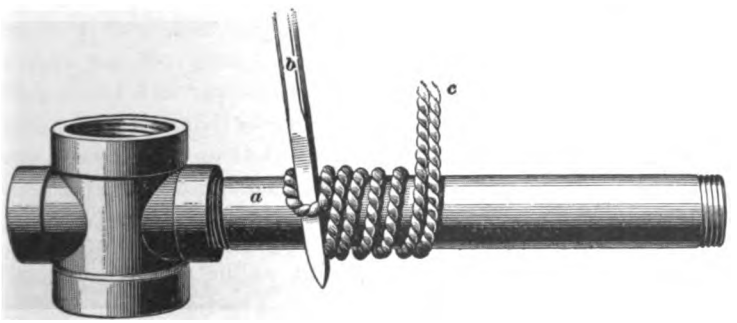

FIG. 47.

device is shown in Fig. 47. The rope is first doubled, as shown at *a*, and given enough turns round the pipe to insure gripping. A bar or even a piece of wood *b* is thrust through

the double end of the rope *a* and the two loose ends of the rope are brought together and held, as shown at *c*. Enough strain is put on *c* to prevent slipping and the pipe is turned by the bar *b*, the same as with any pipe wrench. The workman may walk clear around the pipe, or by slacking off on both the bar and the rope ends, he may rotate the rope backwards to get a new hold.

HAND DRILLING MACHINES.

67. General Consideration of Drilling Ratchets. Ratchet drilling is the slowest method of drilling holes and should not be resorted to if the work can be done by any of the machine processes, such as the drill press, portable drills, and pneumatic drilling machine, but there are places where none of these can be used or are available and in which cases the ratchet must be used.

Ratchets are generally made single acting; that is, the drill only cuts during the forward stroke of the handle; but some of the improved ratchets are made to give a forward rotary motion to the drill or cutter during both strokes. Ratchets are made to use both square- and taper-shank drills.

The taper-shank twist drill is the best tool, but it often happens that odd sizes are needed by men out on repair work where it is impossible to get the proper size twist drill and a square-shank flat drill can be made by any blacksmith or by the man himself, or a flat drill that he may have may be made into the required size in a few minutes, either by grinding or dressing.

68. Use of Drilling Ratchet.—The ratchet is used for drilling in the following manner: The hole to be drilled is laid out in the usual manner and the center punched. Means must be provided to force the drill into the material, which is usually done by providing some sort of brace, or, as it is commonly called in the shop, an *old man*, or a drilling

crow that will serve to support the ratchet and drill in the correct position and at the same time allow the drill to be forced into the work by the feed-screw.

The brace, drilling crow, or old man is made in a great variety of ways, from a piece of flat iron or steel bent to the proper form to the well-designed adjustable one shown in

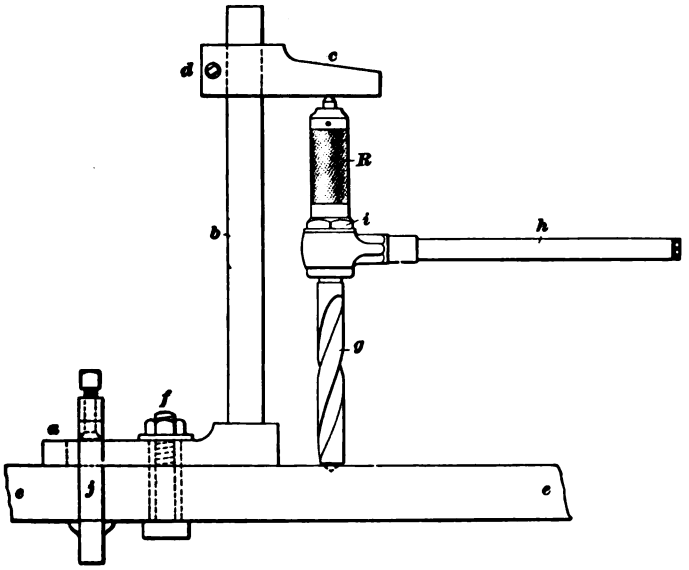

FIG. 48.

Fig. 48. This consists of a base *a* having an upright *b* carrying an adjustable arm *c* that is held by the binding screw *d*.

The base is made fast to the work *e* by means of a bolt *f* or clamp *j*, as shown. The arm *c*, which has a number of center holes in its lower face, is set to such a height that the ratchet *i* and drill *g* will go under it. The drill is set square with the work, or it may be set to lean slightly away from the upright, as the pressure upwards on the arm *c* will spring the upright *b* back and so draw the drill about perpendicular. The drill is rotated by means of the handle *h* and is fed into the work by means of the sleeve *R*.

69. Special Ratchets.—Ratchets for repair work and for use in contracted spaces are often made very short and have square holes in their spindles so as to use very short square-shank drills. They are also used in erecting machinery to ream holes in line.

70. Crank-Driven Portable Drill.—The crank drill is a better tool than the ratchet, where there is room enough to use it. This form of drilling machine is clamped to the work and is operated by a crank that gives a continuous motion to the drill. The feed is operated by one hand and the crank is turned by the other. These drilling machines will work at any angle and form a very useful tool for heavy work.

71. Scotch Drill.—A Scotch drill is a name given to a drilling device formed very much like an ordinary carpenter's brace. It is usually made by bending a piece of steel or iron so that it will form the necessary crank, providing one end of it with a suitable socket for the drill, which may be either square- or taper-shanked. The other end is provided with a pointed center that may be fed out by means of a screw, thus giving the feed to the drill. The crank is rotated like an ordinary carpenter's brace, the device being held in place by a knee or other suitable clamping device. Sometimes the Scotch drill is made with two cranks arranged like a ship auger, so that both hands may be used at the same time, but usually only one hand is employed, as the other is required to operate the feed-nut.

72. Breast Drill.—The breast drill is so named from the fact that it is provided with a suitable guard that may be placed against the breast while drilling, the feed being obtained by a pressure brought to bear upon the drill by the body. The drill is usually operated by means of a crank on the side of the breast drill, which is geared to the drill spindle by bevel gears. This style of drill is very largely used for drilling small holes for attaching name plates, and for similar light work.

FITTING KEYS.

RECTANGULAR KEYS.

73. Fitting Rectangular Keys.—Keys of a square or rectangular cross-section are generally planed or milled a little larger than the size of the key seats they are to fill, and are then filed to fit. If the key is to fit top and bottom, it should be filed true to a surface plate and made of such width as to fill sidewise the key seats in both shaft and wheel. The corners should be slightly rounded, as well as the ends. The shaft is now put into the bore with the key seats in line. Red or black marking should be put on the surfaces of the key seat and the key driven in lightly and taken out and filed where it shows bearing marks. Care should be taken not to drive the key too tightly at first, as it is easily sprung to conform to the inequalities of the hole, and will show a greater bearing than it should. Care must be taken not to drive the key in dry, as it will surely cut. The marking applied to the seat is sufficient at first, and later the marking material may be put on the key, where it serves the double purpose of marker and lubricant. By repeated trials, the key is brought to fit the seat perfectly and then may be driven home without danger of throwing the work out of true.

A well-fitted hub and shaft may be forced considerably out of true by driving a key that is tight only on one end, and poorly fitted wheels and shafts may be made to run reasonably true by using care in fitting the keys and trying the work on lathe centers as it progresses. If means are not at hand for machining keys, as is often the case on repair work, a wooden pattern is first made and the key forged a little large, after which the scale may be ground off on an emery wheel or grindstone and the key filed to fit.

74. Provision for Withdrawing Keys. — Keys that can be driven out by putting a set in the opposite end of the key seat are not provided with heads, but if the seat

is so located that only one end is accessible, that end must be provided with a head, as shown at *a*, Fig. 49, for the purpose of withdrawing the keys. A pinch bar, or wedge, is used between the head *a* and the hub to back this key out.

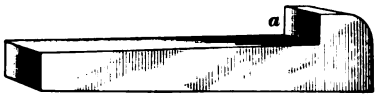

FIG. 49.

For convenience in fitting, large keys are sometimes made with an extension head 3 or 4 feet long, as shown in Fig. 50. While backing out

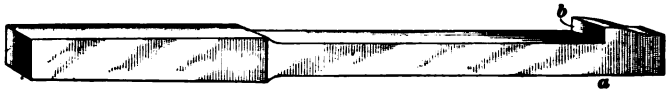

FIG. 50.

such a key it should be supported by holding a sledge under the head at the point *a*, while blows are being struck against the face *b*.

75. Taper of Keys. — When keys are made with a taper, the taper is generally furnished by the drawing room, but in some shops the workman is left to determine this for himself; in common practice, $\frac{1}{16}$ inch to $\frac{1}{8}$ inch per foot is found sufficient.

KEYS HAVING CURVED SECTION.

76. Round Keys.—Sometimes a cylindrical or tapered pin is used as a key. In this case a hole is drilled one-half in the shaft and one-half in the hub; and if the key is to be tapered, the hole is reamed to the proper taper. A key is then turned up to fit the hole, and fitted by filing in the lathe, after which it is driven home. For very small work where there is not much strain on the parts, this style of key may do very well. It is used very generally to fasten the hand wheels of globe valves to the stems. For large work, and especially where there is not a good fit between

the hub and the shaft, such a key should never be used, as it has a tendency to burst the hub.

77. Woodruff Keys.—These keys are made by cutting a disk from a piece of cold-rolled stock and then splitting it into two pieces along its diameter. The keys thus formed are of the form shown in Fig. 51. The key seat in the shaft is made by sinking a milling cutter of a diameter corresponding to the curve on the key into the shaft to such a depth that the proper amount of the key will be left out of the shaft. The key is driven into the shaft, and the wheel, which has previously been key-seated with a seat whose depth is one-half its width, is driven lightly on the shaft, and, if the work has been correctly done, the key has only to be slightly filed to let the wheel into its place. This key bears sidewise and should just fill the top and bottom. It is a short key and when a greater length is required, two or more are put in line.

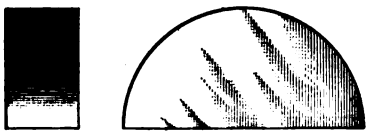

FIG. 51.

BROACHING OR DRIFTING.

78. General Consideration.—Broaching or drifting is the process of forming holes by forcing a cutter of the exact form required through holes previously drilled. In all broaching operations, the greatest amount of stock possible must be removed by drilling, and if much remains for the broaching tools they should be so designed that each tool will be given an equal amount of material to take out.

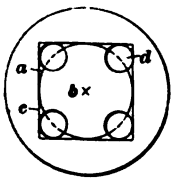

FIG. 52.

79. Simple Square Broach. — The form of broach depends largely on the nature and quantity of the work to be done. If only a small amount of work is to be done, the broach must be as inexpensive as possible. In this case,

most of the work is thrown on the drills or other means used for roughing out the hole and the broach depended on only for finishing the hole.

The simplest form of broaching is illustrated in making a socket to fit a ½-inch square in a tap socket or a chuck screw wrench. The square may be laid out on the end of a piece of round stock, as in Fig. 52. A ½-inch circle *a* is first drawn from the center mark *b* and the square *c* is laid off. Four ⅛-inch holes *d* are now drilled ½ inch deeper than the

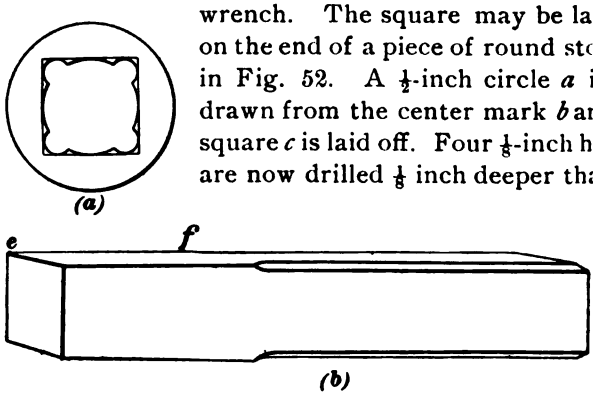

FIG. 53.

hole is to be and just touching the lines of the square. The ½-inch hole is next drilled, which leaves the hole as shown in Fig. 53 (*a*). A square piece of steel, having the proper temper, may now be driven easily to the bottom of the hole. Fig. 53 (*b*) shows this form of broach; it tapers a little from the cutting edge *e* to *f*.

80. Use of Several Broaches in a Set.—In cases where there is a considerable amount of any given class of work to be done, it is best to use several broaches following one another, each removing a portion of the stock. In the case illustrated in Figs. 52 and 53, the greater part of the metal at the corners was removed by drilling small holes, and in some cases some additional metal was chipped out. If there is much of this work to be done, all the metal in the corners may be removed by passing a series of broaches through the work. In Fig. 54 the forms of four broaches for squaring a ½-inch round hole that extends through the piece are shown at *e*, *f*, *g*, and *h*. All the broaches

should be provided with several cutting edges, as shown between *b* and *c*, and a guide pin, as shown at *a b*, in the upper part of Fig. 54, which represents the finishing broach.

81. The pieces of steel to form the set are first centered and milled to the size of the square, after which the guide from *a* to *b* is turned to the size of the largest hole that can be drilled inside the square, which is, in this case, $\frac{1}{2}$ inch.

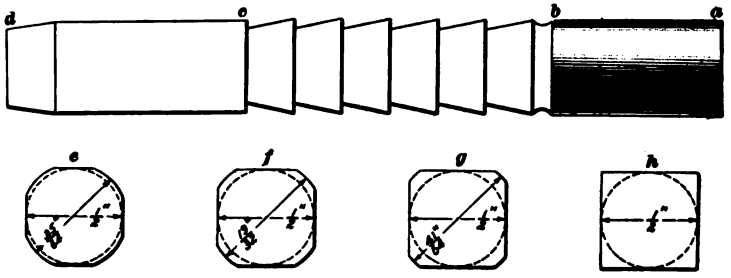

FIG. 54.

The toothed part from *b* to *c* is cut either by milling or planing, or the teeth may be cut in the lathe and afterwards backed off for clearance by hand. The size from *c* to *d* should be made slightly smaller than the toothed part, so that it will easily pass through the hole.

The various broaches of the set are made of such form that each takes out nearly an equal amount of stock. The broach marked *e* is driven through first and is followed in succession by *f*, *g*, and *h*, which finishes the hole to size.

82. In a new broach the teeth from *b* to *c* are all of the same size, so that only the leading teeth cut and those behind simply steady the broach. As the front teeth become dull, they are ground on the front or flat face, and thus are reduced in size so that the other teeth farther back must be depended on to do the finishing.

In preparing the blanks for the broaches shown, the corners in the broaches *e*, *f*, and *g* can be turned off in the lathe, and if desired both the cylindrical and the flat surfaces

can be finished by grinding after hardening. The broaches described are intended to be driven by a hammer, but they may be forced through by a power or hydraulic press.

83. Broaching Keyways. — Keyways may be broached more quickly and accurately than they can be chipped by hand. In some cases quite large and long keyways are formed in this way, the broaches being driven by means of sledges.

The necessary tools for broaching keyways are shown in Fig. 55. First there must be a plug, Fig. 55 (*a*), turned to the proper diameter *c d* so that it just fits the bore of the hub, and it must be of sufficient length to pass entirely

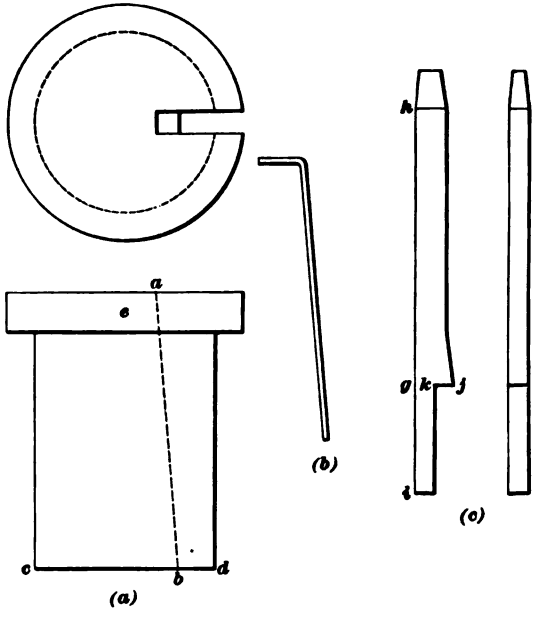

FIG. 55.

through the hub. The plug is provided with a collar *e* which prevents it from passing too far into the hub. A slot or keyway having the same taper as the required keyway in the hub is cut in the plug, as indicated by the dotted line *a b*.

The cutting in the hub is done by the tool shown in Fig. 55 (*c*). The cutting edge is at *j*, and the thickness *g j* must be equal to the depth of the narrow end of the slot *b d*. In order to make the broach cut, liners are placed in the groove behind the broach; one of these liners is shown at Fig. 55 (*b*). The liners are made of sheet metal, and, if the keyway is a large one, after several thin liners are in place they may be removed and replaced by one thick one, after which the thin ones may be replaced one by one, as the successive cuts are taken. This method of employing some thick liners reduces the number of joints that can be compressed as the broach is being driven and so makes the work more uniform.

The broach is provided with a guide *g i* which enters the hole first, and the portion *g h* must be at least equal in length to the slot *a b*, so that the broach can be driven clear through. The face *j k* of the broach should be perpendicular to the face to be cut. The broach, if very large, may be made of machine steel and provided with an inserted blade or cutter at *j*. The cutting edge of a broach should be hardened to a brown or dark-straw color.

84. Machine Broaching.—Broaches for large holes, or for large numbers of similar holes, such as are met with in manufacturing, are forced through the work by power-driven machines or hydrostatic presses that support the work

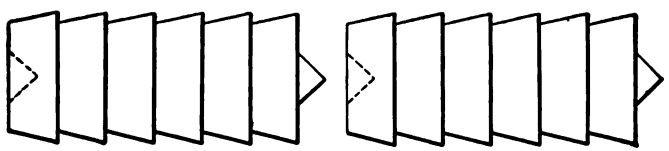

FIG 56.

and also guide the tool. Broaches used in these machines are designed with special reference to the form of the hole and the quantity of stock to be removed, and a dozen broaches may be made to work out a single form of hole, each one taking a light cut.

Broaches for the machine work may be made, as shown in Fig. 56, with a countersunk center in the head and a corresponding external center on the point. The No. 1, or smaller, broach of a set is forced downwards as far as it will go, and then the No. 2 is placed on it, with its point in the reamed center to guide it; this one, also, is forced downwards, driving the first one through. This is repeated until all the broaches have been driven through the hole. In some cases, a single broach is forced through by hydraulic

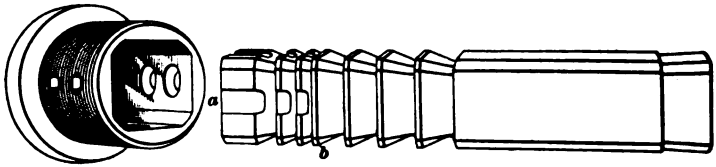

FIG. 57.

pressure and made to finish a hole in one operation. Fig. 57 shows a broach and broached piece. The broach in this case has rounded corners, which illustrates a practice that should be followed wherever practicable, as teeth of this form are much less liable to break than those of square-cornered broaches. The notches *a* allow the broach to be started without taking the whole cut, and when it has entered far enough to have sufficient support to steady it, the whole teeth *b* commence cutting and finish the work.

85. Angle of Broach Teeth.—The teeth on broaches are sometimes cut diagonally across the sides, but these do not cut as easily as those cut square across, and they also have a tendency to force the broach to one side or to make it take a spiral course, thus causing some of the teeth on the corners to gouge in. For this reason, the teeth are generally made straight across.

86. Lubrication of Broaches. — For cutting most metals, broaches require an abundant supply of lard oil. In broaching keyways in cast iron, oil is not required so much for the cutting operation, but the back and sides of the broach should be well lubricated.

LAYING OUT.

INTRODUCTORY.

87. Definition.—Laying out is the process of placing such lines on castings, forgings, or partially finished surfaces as will designate the exact location and nature of the operations specified in the drawing.

88. General Consideration.—In many cases, one or more men are regularly employed in laying out work. Occasionally, the same men devote a part of their time to inspecting or testing finished or partly finished work. The object of inspecting when partly finished is to prevent additional work should the first operation be defective to a degree that calls for the rejection of the piece. One great advantage of having the work laid out by an expert who has the drawing of the finished piece before him is that he may determine, before any work is done, whether the forging or casting has the required amount of stock, and should there be insufficient stock at any particular point, the piece may either be rejected or perhaps saved by carefully locating the lines so as to permit the finishing of all the holes and surfaces; whereas, if a part of the work is done without the special laying out, it may afterwards be found that there is not sufficient stock for some later operation.

89. The economy of having the laying out done by men set apart for that purpose is due to several reasons. Men become expert and quick at this kind of work; the tools of the shop are not idle while the men running them stop the machine to do the laying out, as was formerly the case; even the vise hands are saved the time of laying out their work; besides, it can be done on a convenient plate with proper tools to better advantage than otherwise. Then, work can be laid out as soon as the castings or forgings come into the shop, perhaps long before the tools are at liberty to finish the work, and it may be of great advantage to find out early any lack of stock or any defect that may cause the

rejection of the piece, or any change that is to be made, if it is a forging. For instance, a casting may appear to be all right, but a hole may be cored too large, or the core may not have been set correctly, or it may have moved in the mold. After laying out some of the lines and making sure that there is stock enough for finishing, it is often advisable to do part of the finishing before completing the laying out.

90. Divisions of Laying Out.—Laying out may be divided into two parts, the preliminary and the final. The preliminary laying out consists in measuring the piece to see that it is of the proper size and dimensions and then drawing such lines on its surfaces as will show where the first machining operations are to be performed. The center lines are so placed, if possible, that they will not be removed by the machining process and can be used in resetting the piece for future machining. The final laying out consists of placing such lines on the machined surfaces as will indicate the further operations to be performed.

The preliminary laying out in the case of a steam-chest cover would be to level it upon the table and draw such lines on its edges as will indicate its thickness; after which it should go to the planer and be machined to the dimensions denoted by the lines. The final laying out will consist of laying out the holes for the studs and such other operations as might be designated on the drawing.

91. Methods of Laying Out.—Laying out is done in different ways, according to the nature of the work and the accuracy required. The lines are drawn on the surfaces with surface gauges or scribers, and centers are denoted by prick-punch marks. Circles and arcs of circles are drawn with dividers and trammels, and many irregular forms are drawn on the work from accurately filed templets.

In some cases, work is laid out by simply drawing the necessary lines on its surface. In other instances, permanence is given the lines by dotting them with prick-punch marks placed directly on the line; or a thin chisel may be driven into the work on the lines, making a deep cut in the

metal. Guard lines are often placed on work to make sure that the original lines were closely followed, as, in laying out holes to be drilled, some persons place a circle $\frac{1}{16}$ inch outside the one worked to, and if the hole is correctly drilled it will be concentric with this circle.

92. Coatings on Which to Make Lines.—In many cases it would be impossible to scratch lines on an iron surface, especially when the latter surface is not perfectly smooth or when it is very hard. This has led to the use of various coatings on which the lines may be made or in which they may be scratched. Sometimes chalk is simply rubbed on the surface. In other cases, powdered chalk is mixed with alcohol and applied with a brush, or whiting is mixed with alcohol or water and applied in the same way. Alcohol has the advantage over water in that it will dry quicker and has no tendency to rust the surface.

When the surface has been machined and is fairly smooth, it may be copper-plated by wetting it and rubbing the surface with a piece of copper sulphate (blue vitriol), or, better still, by making a saturated solution of copper sulphate and applying this with a brush or swab. As the solution dries, it will be noticed that the surface is covered with a thin layer of copper. This cannot be done if there is any oil on the surface, and surfaces to be thus coppered must be cleaned perfectly before applying the solution. Lines may easily be scratched in this copper and will show very plainly on account of the difference in color between the iron and the copper. In some cases, a light coat of some quick-drying white paint is used, as, for instance, white lead and turpentine. In any case, after the lines are drawn, their location should be permanently established by means of light prick-punch marks.

LAYING-OUT TOOLS.

93. Tools and Appliances Used in Laying Out.—A variety of tools are used in laying out work. The most common are the surface gauge, scriber, hammer, prick punch,

level, square, dividers, trammels, and a line, if large work is handled. In addition to these tools, there should be a supply of quick-drying white paint, chalk, a solution of blue vitriol, a lot of iron wedges, and small pieces of sheet metal of various thicknesses for blocking, parallels of various sizes, small jack-screws, one or more pairs of V blocks, a pinch bar, and a hack saw.

The surface of the laying-out table or plate must be kept as clean as possible, therefore a bench brush should be provided for the table and for the large plate a brush and broom. As a good many drawings are used at the laying-out table, a table or stand of sufficient size to hold them, and drawers in which to place those not in constant use, should be provided near at hand.

94. Surface Plates. — The surface plate is used in machine construction for testing flat surfaces. It is generally made, as shown in Fig. 58, of a hard close iron casting having a flat top *a*, Fig. 58 (*a*), supported by a ribbed back *b*, Fig. 58 (*b*). Three legs *c*, *d*, and *e*, Fig. 58 (*b*), are

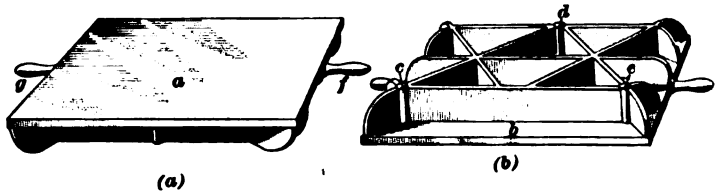

FIG. 58.

provided so that the plate will stand evenly on any surface. Handles *f* and *g* are placed on the ends, by which the plate may be lifted. The tops of these plates are first planed as smooth as possible, after which they are filed and scraped perfectly flat.

When in use, the surface plate is coated lightly with some marking material, after which the plate is rubbed over the surface that is to be trued. The marking material is left on the high places, thus showing the parts that are to be removed with the scraper. This operation is repeated until

the surface shows a good bearing at all points. Small articles are rubbed on the plate. Care should be taken in using surface plates to use every part of the surface as evenly as possible, for if the work is all done in one place the plate will soon be spoiled. Surface plates of this form are made in a great variety of sizes for different kinds of work. Special plates are often made for special work in places where it is impossible to put a plate having a ribbed back.

95. Straightedges.—A straightedge is used for testing flat surfaces and the alinement of machine parts. Most straightedges are made with two edges that must be straight and parallel. The metal of the straightedge must be so placed as to give the greatest stiffness in the direction of the edge to be used. For this reason, straightedges are usually made deeper than they are wide. Straightedges are made in a large variety of forms and lengths, and may vary from 1 inch or so in length up to 10 feet or more.

For small work, a graduated steel rule is frequently used as a straightedge, the hardened and ground ones produced by several manufacturers being the best for this purpose. Hardened-steel straightedges having the general form of a knife, so as to reduce the straightedge to a narrow line, are frequently used. Fig. 59 illustrates a common form that is hollowed out on the sides so as to give a better grip to the hand in handling it.

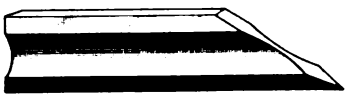

FIG. 59.

96. Where straightedges of considerable length are desired, careful attention should be paid to their design, to see that they are made as stiff as possible and at the same time that the weight is not unduly increased. Where only one straight surface is required, the form shown in Fig. 60 is very good indeed. These are made of cast iron and the surface *a b* carefully planed and scraped true. Where it is necessary to use a level on the back of the straightedge, or where other straightedges may have to be placed at right angles, it becomes necessary to have both edges true and

parallel. For this class of work the tool shown in Fig. 61 is especially useful. The drawing shows the proportions for a

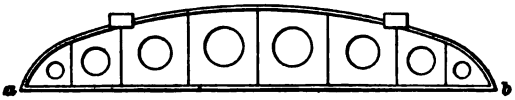

FIG. 60.

10-foot straightedge. It will be noticed that the general form is that of a box girder and that the center is cored out, openings being left in the sides to support the core during casting. The metal, in the case of a 10-foot straightedge,

FIG. 61.

should be about $\frac{1}{2}$ inch thick, and a straightedge of this form should be planed all over and allowed to season some time before it is finished, so as to relieve the casting strains as much as possible.

SUBDIVIDING CIRCLES.

97. Locating the Centers of Circles.—When it is necessary to draw a circle on work where the center does not occur on the casting but in the center of an opening or cored hole, it is necessary to locate the center from which the circle may be drawn. This may be done by fitting a strip of wood across the cored opening and locating the center upon this. Owing to the fact that the wood is too soft to give a good center to work from, it is usual to place a piece of metal where the center is required. This piece of metal may be a tack driven in the wood, the center being located on the head; or it may be a triangular piece of tin

having the corners bent at right angles to the surface, so that they can be driven into the wood, the center being located on the flat surface of the tin.

98. Sometimes small jack-screws having flat sides on the body of the jack are used to locate centers, the jack-screw being placed across the hole and the center located on its side, as shown in Fig. 62 (*a*). After the center is

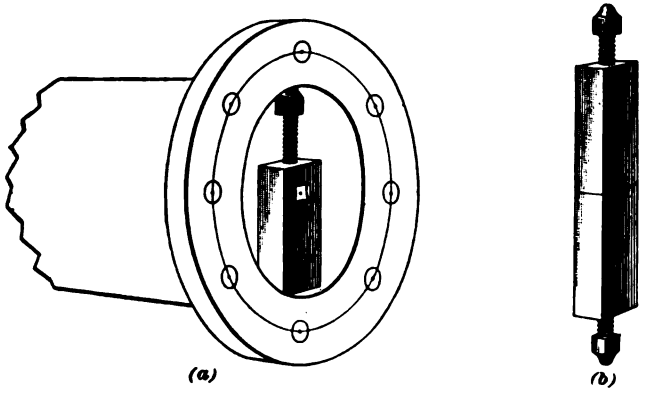

FIG. 62.

located, the bolt-hole circle is drawn, and the required holes spaced off on it. If the cored hole is too large for one jack-screw to reach across, two jack-screws may be placed with their bases together, as shown in Fig. 62 (*b*), and the center located on them.

99. Laying Off Subdivisions of a Circle.—In case a circle is to be divided into 4 or 6 parts, or into multiples of 4 or 6 parts, it is usual to draw lines across the circle, dividing it into this number of parts first, and then make any additional subdivisions from these points. Four divisions can be easily obtained by drawing two lines at right angles, the work being mounted upon the laying-out plate, the horizontal line being obtained with the surface gauge, and the vertical line by means of a square.

TABLE FOR DIVIDING CIRCLES.

N	S	N	S	N	S	N	S
1		26	.120540	51	.061560	76	.041325
2		27	.116090	52	.060379	77	.040788
3	.86603	28	.111970	53	.059240	78	.040267
4	.70711	29	.108120	54	.058145	79	.039757
5	.58779	30	.104530	55	.057090	80	.039260
6	.50000	31	.101170	56	.056071	81	.038775
7	.43388	32	.098018	57	.055089	82	.038303
8	.38268	33	.095056	58	.054139	83	.037841
9	.34202	34	092269	59	.053222	84	.037391
10	.30902	35	.089640	60	.052536	85	.036953
11	.28173	36	.087156	61	.051478	86	.036522
12	.25882	37	.084804	62	.050649	87	.036103
13	.23932	38	.082580	63	.049845	88	.035692
14	.22252	39	.080466	64	.049068	89	.035291
15	.20791	40	.078460	65	.048312	90	.034899
16	.19509	41	.076549	66	.047582	91	.034516
17	.18375	42	.074731	67	.046872	92	.034141
18	.17365	43	.072995	68	.046184	93	.033774
19	.16460	44	.071339	69	.045515	94	.033415
20	.15643	45	.069756	70	.044865	95	.033064
21	.14904	46	.068243	71	.044232	96	.032719
22	.14232	47	.066793	72	.043619	97	.032381
23	.13617	48	.065401	73	.043022	98	.032051
24	.13053	49	.064073	74	.042441	99	.031728
25	.12533	50	.062791	75	.041875	100	.031411

To produce 6 divisions, it is only necessary to set the dividers to the radius of the circle and then step them around the circumference of the circle, when it will be found that the radius will just step around 6 times. In order to produce any other number of divisions, up to and including 100, the accompanying table is given. By its use, the dividers may be set very closely, and much of the time

and trouble usually spent in getting the dividers properly set by stepping them around with trial distances may be avoided. The numbers in the column headed "N" indicate the number of divisions into which the circle is to be divided, and the numbers in the column headed "S" are the sines of half the angles obtained by dividing the circle into the number of parts given in N. The distance between any two points on the circle may be obtained by the formula $M = S \times D$, in which M equals the measured distance between two of the points in inches, D the diameter of the circle in inches, and S the number found in the column S of the table opposite the number of holes required.

EXAMPLE.—If it is required to divide a 62-inch circle into 44 equal parts, what will be the distance to which the dividers should be set?

SOLUTION.—Opposite 44 in the column marked N of the table, and in the column marked S, is found .071339. Substituting in the formula, we have

$$M = .071339 \times 62 = 4.423018 \text{ in.} \quad \text{Ans.}$$

For ordinary work it would not be necessary to set the dividers closer than to hundredths of an inch; hence, the dividers may be set to 4.42 inches. On account of the fact that 44 is divisible by 4, the circle may be divided by two diameters drawn at right angles and the spaces marked off to the four points thus obtained.

100. It is always best in laying off a circle to locate either four or six points accurately and to work from these, as this reduces the effect produced by means of a slight mistake in the setting of the dividers; for if the circle was all laid off from one point and the dividers were set to a distance slightly greater than that required, the last division would be smaller than the others by an amount equal to this error multiplied by the number of spaces in the circle. But by dividing the circle into four or six parts and then stepping off the spaces each way from each of these points, the total error at any given point will only amount to the error in setting the dividers, multiplied by the number of spaces marked off from the given point, which will be from $\frac{1}{6}$ to $\frac{1}{12}$ of that in the previous case, depending on whether the circle has been divided into four or six parts.

LAYING-OUT PLATES.

101. Plate for Light Work.—For laying out light or small work, the size and character of the plate used may vary greatly. In some cases a flat casting, as the base of an old machine, is taken from the scrap pile and planed up; this is placed upon a bench or upon suitable trestles. In other cases a well-designed casting is made. Fig. 63 illustrates a general form of laying-out plate. The plate *a* may vary in size from 2 or 3 feet on each side up to considerable size, about 7 by 10 feet being the largest size practicable for this design of plate. In the larger size the top *a* should be

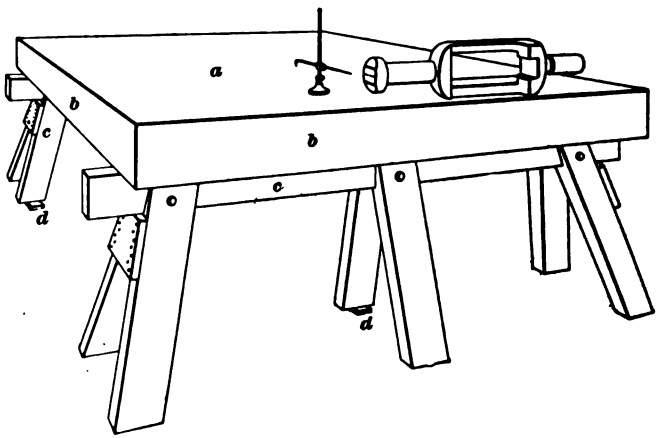

FIG. 63.

made 1¼ inches thick, the ribs *b* should be carried around the sides of the plate and cross-ribs placed across the back of the plate about every 24 inches; the depth of these ribs for a plate 7 by 10 feet should not be less than 8 inches, and they should be of the same thickness as the body of the plate. The casting should be planed on the upper surface *a* and on the faces of the ribs *b*, so that the faces *b* will be at right angles to the surface *a*, thus making it possible to use surface gauges or other tools from the faces *b*. In a plate of this style, it is well to draw parallel lines both lengthwise and crosswise of the plate, the lines being

3 or 6 inches apart. As shown in the illustration, the plate is mounted upon trestles *c* and care should be taken to keep the upper surface of the plate level and out of wind by adjusting wedges under the legs of the trestles, as shown at *d*. For ordinary working it is well to have the upper surface of the plate about 30 inches from the floor. Such a plate as this may be placed under the main traveling crane, and it is also well to have an auxiliary air lift, or similar hoisting device, for handling the work when the crane is not available.

102. The advantages of this style of plate are that it is not a permanent fixture in any one place and, hence, can be easily moved from one part of the shop to another, if it should be more advantageous to have it in a different position. Then, too, if the plate is not needed for some time, but the floor space is, it can be turned upon one edge and set against the wall and the space that it formerly occupied utilized for erecting or for other work.

103. The disadvantages of this style of plate are that owing to its support upon trestles it is not suitable for laying off heavy work which requires great accuracy, on account of the fact that it is impossible to keep the plate true and out of wind when heavy weights are being placed upon or taken from it, as the strains on both the plate and the trestles are constantly changing. Sometimes a plate of this general style is mounted upon a concrete or brick foundation, but if the latter expense is to be incurred it is usually best to have a more elaborate one, such as is described in Arts. **104** and **105.**

104. Plate for Heavy Work.—For laying off heavy work, the plate must have a very firm foundation and the ribs must be of sufficient depth that there is no danger of the plate springing under the weight of the piece being laid off. Plates for heavy work are usually made lower than those for light work, the top of the plate being placed from 18 to 24 inches above the floor. Fig. 64 illustrates a very

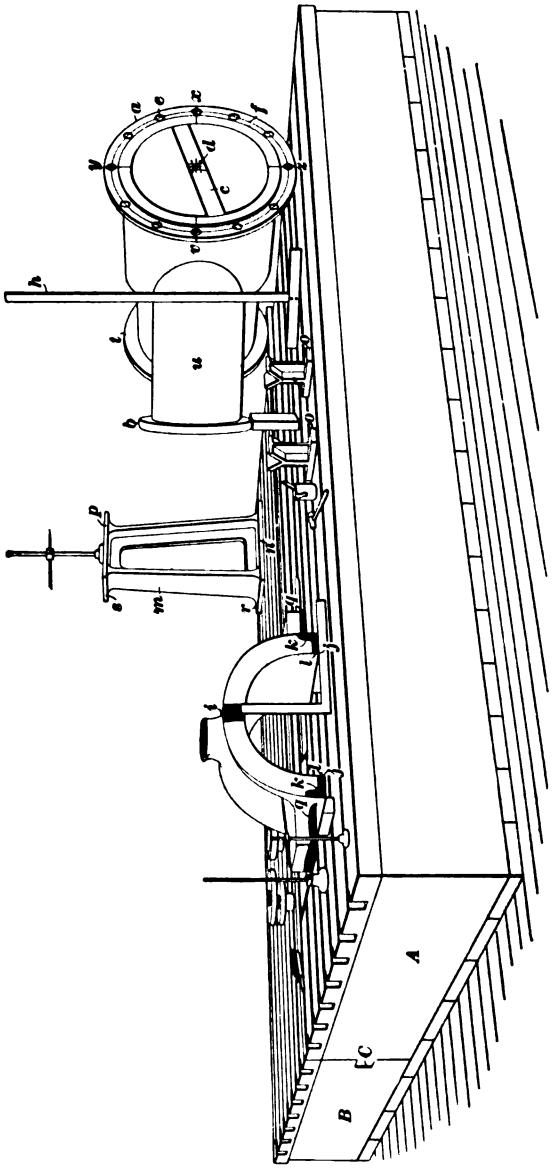

FIG. 64.

good plate for heavy work that is in use in one large shop. The top of this plate is 24 inches above the floor and is composed of two pieces *A* and *B* that are joined together with a tongue and groove as shown at *C*. This plate is 8 by 15 feet and the ribs around the outside and along the center are made to extend clear to the foundation, which is only 2 inches above the floor, thus making the plate 22 inches deep. Parallel grooves, 6 inches apart, are planed the entire length of the top surface, and at right angles to these, lines are ruled on the surface 6 inches apart. The grooves are especially handy on account of the fact that parallels can be slipped into them and pieces brought against these parallels for lining up, after which measurements may be made from either grooves or lines. In the case of all heavy plates, care should be taken to see that the plate has a good bearing on the foundation and that the foundation is made deep and strong enough that it will not settle or be broken under any weight that is liable to be put upon the plate.

105. Plate for General Work.—In shops handling a variety of work, varying from heavy to light, a plate of the form illustrated in Fig. 65 may be used. This plate is about 8 by 12 feet and the details are shown in Fig. 66. The foundation consists of a concrete base on which are built three brick walls running lengthwise of the plate and

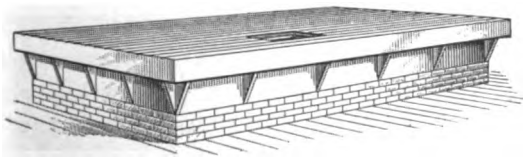

FIG. 65.

a cross-wall at each end. The plate is supported on these walls, as shown in Fig. 66. A hole in the plate, at least 18 by 24 inches, together with an opening in the middle wall, affords access to the space beneath the plate for the purpose of cementing between the iron and brickwork. This hole in the plate is also useful, on account of the fact

that it permits parts of the work to hang below the surface; as, for instance, one crank of a 3-throw crank, or an arm on a rocker-shaft. The hole is cast with a ledge to receive the wooden cover. This cover is necessary to prevent things from falling through the hole and being lost under the plate. The top of the wooden cover should be $\frac{1}{8}$ inch below the surface of the plate. It will be noticed that the plate overhangs the foundation 7 inches all around to allow foot-room on the floor.

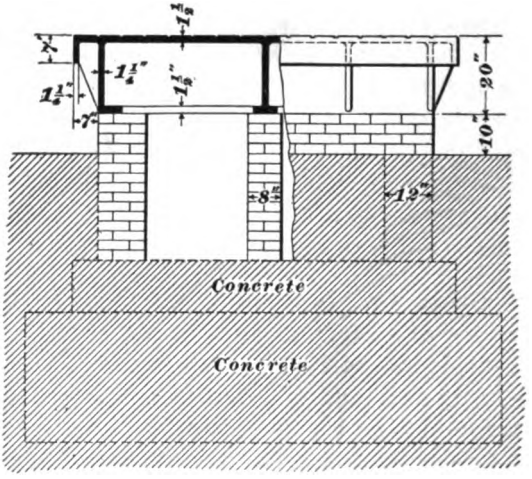

FIG. 66.

Grooves $\frac{1}{2}$ inch wide and $\frac{1}{4}$ inch deep are planed lengthwise every 6 inches and lines made crosswise every 6 inches, or grooves may be planed both lengthwise and crosswise. A number of short parallels $\frac{1}{2}$ inch square should be provided to drop into the grooves to aid in locating the work or tools. The proportions or size of the plate may, of course, be varied to suit the character of the work being done. It is not good practice to mount a plate on brick walls running in one direction only when heavy work is to be placed upon or taken off the plate, as if work were to strike the end, there would be danger of racking the walls,

while the tying of the longitudinal walls together at the ends tends to overcome this difficulty, and also prevents dirt from collecting beneath the plate.

106. Revolving Laying-Out Plate.—In many cases it is quite important to have the light come upon the work in a certain direction, so as to enable the operator to see the lines being drawn, and also in the case of small work, it is often necessary to operate upon several sides of the piece.

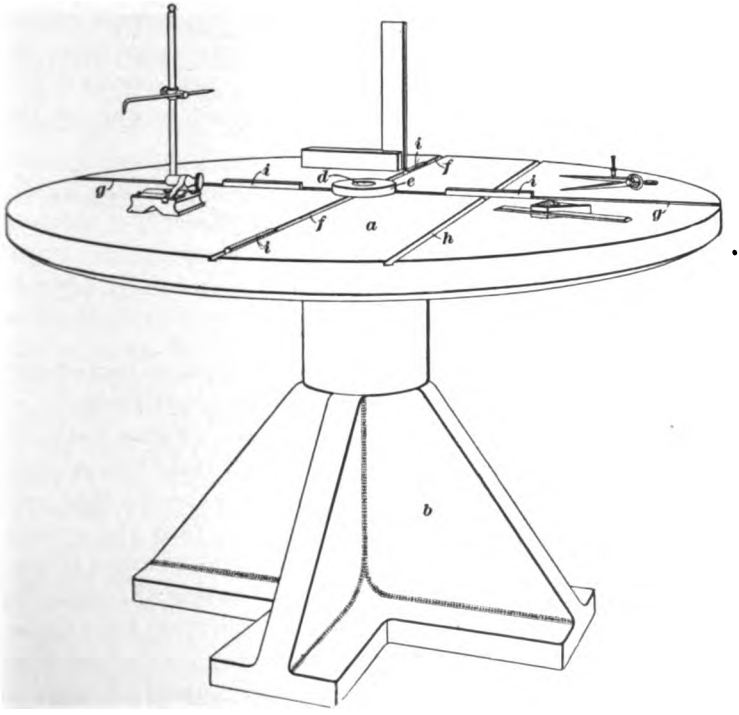

FIG. 67.

If this work were placed on a large plate, the work would have to be turned and reset several times, or the operator would have to climb around over the plate. To overcome this difficulty, a plate of the general form shown in Fig. 67

may be employed. This consists of a circular table *a* mounted upon a suitable foot, or base *b*. The back of the plate *a* is ribbed as shown in Fig. 68, and a ball bearing is inserted between the plate *a* and the base *b*, as shown at *c*. In order to facilitate the centering of work having a hole in it, a plug *d*, Fig. 67, may be inserted in the center of the table and a ring *e* of suitable diameter placed over the plug. Work thus dropped over a ring of the proper size can be quickly centered. To facilitate the dividing of work, two grooves *f* and *g* are planed across the table at right angles. These grooves are so located that one edge of the groove passes through the center of the table. For convenience in measuring, other grooves may be located at any specified distances from the center and parallel to either one of the

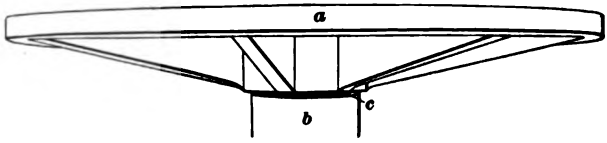

FIG. 68.

main grooves, as shown at *h*. Small parallels are introduced into the grooves for adjusting squares or other tools, or to bring the work into the desired position. These parallels are shown in position at *i*, *i*. By means of these two grooves and the parallels, work can very quickly be divided into four equal parts by dropping the parallels into the groove and bringing a square against the side of the parallel in contact with the edge of the groove that passes through the center of the plate, and repeating this operation four times. The top of the table illustrated is 31 inches above the floor and the rim is 2 inches thick. For some classes of work it would be convenient to have circular lines turned on the table, 1 inch apart, before the plate was taken from the lathe.

This form of table can easily be taken to the work, in place of bringing the work to the table, in cases where there is a large amount to be handled, and especially when it is

advantageous to have it done near the same machine. For convenience in moving the table, an extension of the hole that receives the pin *d* in the base *b* may be tapped and a strong I bolt fitted to it. This bolt will form a ready means of attaching the crane hook to the table.

EXAMPLES OF LAYING OUT.

107. Special Laying-Out Appliances.—On the laying-out table illustrated in Fig. 64 are shown several special laying-out appliances. First may be mentioned the parallel shown at *m*. These parallels are made in various heights, differing by even feet, and smaller solid parallels or hollow rectangular parallels are made, varying by inches, so that any height, varying by inches, can be obtained from a series of them. The edges *n* and *p* and *r* and *s* should be in the same vertical planes, so that when one of the edges *n* or *r* is brought against a certain parallel or line upon the plate, the corresponding edge *p* or *s* will be in the same vertical plane. This enables the man doing the work to obtain horizontal measurements from the edges of the upper surfaces of the parallels. With the use of these parallels, it is unnecessary to use the old-fashioned high surface gauge, which could never be depended on because of the spring of its parts.

At the front of the plate are shown two V blocks *o*, *o* that are extremely useful in laying out pieces having turned ends, or any form that has to be supported in this manner. At *h* is shown a special T square, which, for some classes of work, is more useful than an ordinary square for drawing vertical lines, owing to the fact that there is little, if any, danger of the portion in contact with the plate becoming displaced; while if an ordinary square were used, it would be necessary to make the arm or beam in contact with the plate very heavy to balance the long blade.

108. Laying Out Bolt Holes for Pipe Flanges. In Fig. 64 at the right-hand side of the plate is shown a

casting for a branch pipe in which it is required to lay out bolt holes for the different flanges. The pipe is leveled by blocking up the small end *t* until the large end *a* stands square with the plate or table. The branch or arm *u* is next raised until the surface *b* is square with the table. Wooden strips are fitted across the ends of the pipe, as shown at *c*, this fitting usually being done before leveling up the pipe so as not to displace the setting by driving in the wooden strips. After the wooden strips are in place and the pipe is leveled up, the trammels are set to approximately the radius of the circle *e* which has been turned on the end of the pipe while in the machine. With these trammels, the arcs at *d* are drawn and a center located between them. Usually a small piece of tin or other metal is placed at the center of the wooden strip to receive the center when located. After this, trammels or dividers are set to the radius of the bolt circle *f* and this circle drawn. If the drawing calls for an even number of holes, a surface gauge is set to the center and a line drawn across the flange as shown at *v x*. This line may be continued across all three of the flanges. If the number of holes is a multiple of four, a vertical line is also drawn by means of a square, or a T square similar to that shown at *h*, thus locating the top and bottom holes *y* and *z*. The other holes are spaced off from these by means of dividers. In case of any number of holes, whether odd or even, the setting of the dividers can be obtained by the method described in Art. **99.** In the illustration, 12 holes are shown in the flange *a*. When the holes in the three flanges must have some fixed relation to each, the horizontal line *v x* is carried around all three faces and the holes laid off from this as required.

109. Laying Out a Large Journal Cap.—At the left-hand corner of the plate, Fig. 64, is shown a journal cap in the process of being laid off. The casting is blocked up on the plate so that the front and back faces are approximately square to the surface, and the center line *i* is drawn midway between the points *j*, *j*. The shoulders *k*, *k* are laid

off at equal distances from the center line i and a proper allowance for finish is made at the top of the box, after which the lines l, l are drawn so that the vertical distance from the horizontal plane passing through l, l to the point determined at the top of the box is equal to the radius of the finished box. The lines q, q on the flanges of the cap are next drawn the proper distance above the lines l, l. After this, the cap is planed before the holes for bolting down the cap are laid out or drilled.

110. Laying Out a Crank-Arm.—The crank-arm shown in Fig. 69 may be laid out as follows: The piece is first placed on its side, with the parallel a under the small end. A surface gauge is set to the center of the hub, which has been determined by placing a wooden strip g across the

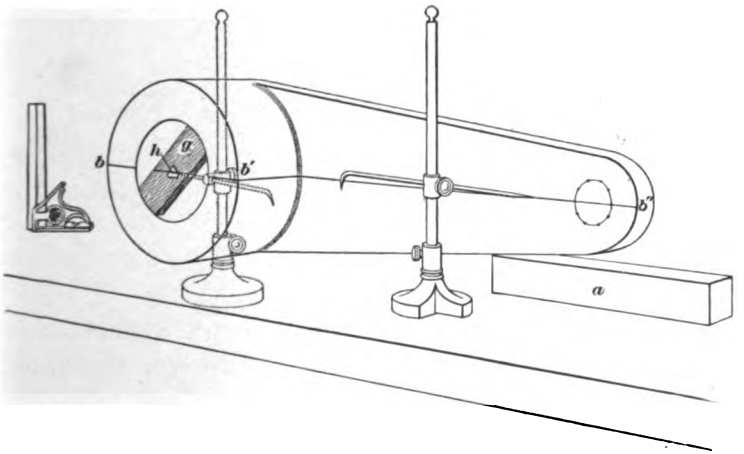

FIG. 69.

hub and locating a center h upon it by means of dividers. After this, the parallel a is pushed under the end of the arm until the small end is raised so that the point of the divider is level with the center of the arm. Then the line $b\,b'\,b''$ is drawn. After this the arm is clamped to an angle plate, as shown in Fig. 70, the line $b\,b'$ being brought vertical by means of a square. The surface gauge is set to the center h and the

line $c\,c'$ drawn. The surface gauge is next set so that its point will be above the line $c\,c'$ an amount equal to the distance between the two holes in the arm and the line $d\,d'$ drawn. This locates the center of the hole f, after which

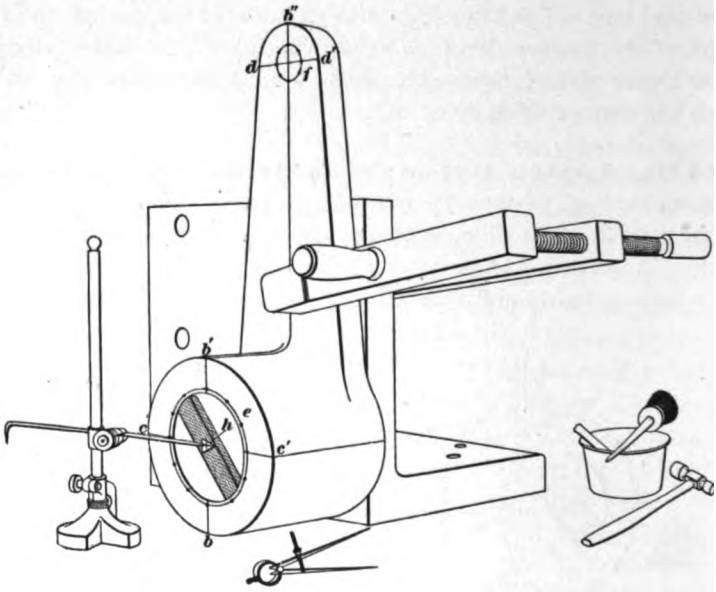

FIG. 70.

the circles at e and f may be drawn with dividers and marked off with prick-punch marks, as shown, ready for drilling or boring.

111. Laying Out a Crosshead. — The method of laying out a crosshead is governed principally by the design of the crosshead. The form shown in Fig. 71 is one provided with adjustable shoes, the end $h\,h'$ of the crosshead being considerably narrower than the end $a\,a'$, so that as the shoes are moved along on these inclined surfaces, they will be expanded. The method of laying out is as follows: The crosshead is placed on the table with blocking under the piston rod end and wedges under both sides of the connecting-rod

end, as shown in the illustration. If the piston-rod end is to be turned at the part marked *d*, the casting is usually made with a metal bridge *f* which is cut out after the rest of the machine work has been done. In case no such metal bridge exists, it is necessary to insert a wooden strip at this point on which to locate the center *f*. Wooden blocks are also placed in the holes, as shown at *e*, and in the center of the piston-rod hole in the end *d*.

Chalk or white paint is applied in a broad line wherever the laying-off lines are to be placed, as shown by the broad, dark marks in the illustration. The centers of the holes for the connecting-rod pin and for the piston rod are now found and the casting is leveled up by them and brought square

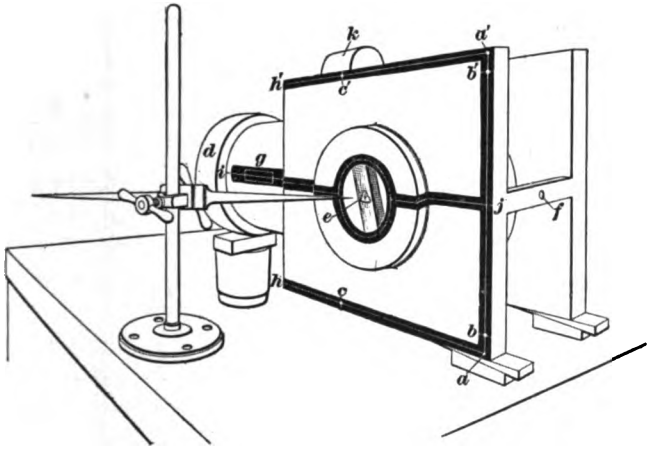

FIG. 71.

with the table at the connecting-rod end. If it is found that the cored holes for the piston-rod or crosshead pin are not in the correct relative position, the body of the casting may be shifted somewhat to bring them into such a location that all can be finished to the required dimensions. When these points are definitely located, the center line *i j* is drawn on all sides of the work. The centers at each end of the crosshead-pin holes *e* are laid off the proper distance from the

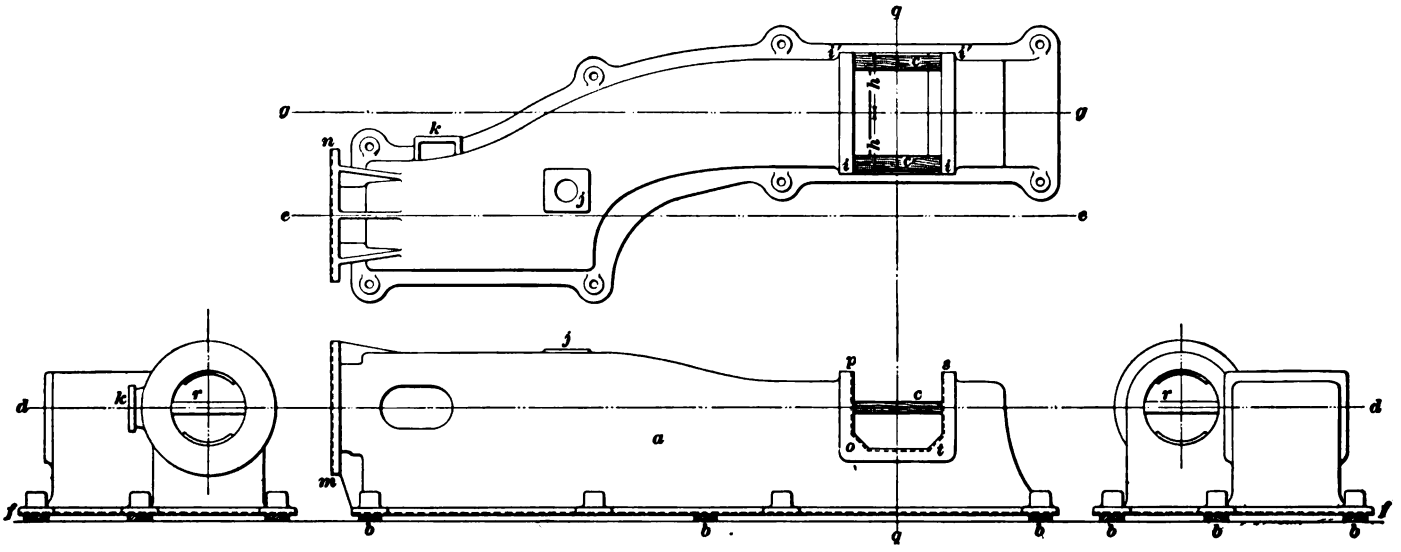

FIG. 72.

piston-rod end *d* and a circle drawn at each end of the crosshead pin. A circle is also drawn for the piston-rod hole. The slot *g* for the piston-rod key is next laid off the proper distance from the end *d*. This slot is sometimes made with round ends and sometimes with square ends, depending on the conditions specified in the drawing.

The line *a a'* is drawn the correct distance from the center *e*, this line being located by means of a square that is set on the table. The lines *a h* and *a' h'* are not parallel to the table, on account of the tapered form of the crosshead body, and in order to determine these lines the following process may be used: The taper is usually given as so much per foot on the drawing, and this amount may be marked off from *a* and *a'* as shown at *b* and *b'*. After this, short vertical lines are located at *c* and *c'*, 1 foot from the line *a a'*, and the surface gauge is set to the point *b* and a mark made at *c*. It is then set to *b'* and the mark made at *c'*, thus establishing two points on the inclined lines. After this a straightedge may be laid through the points *a* and *c* and the line *a h* drawn, and then through the points *a' c'* and the line *a' h'* drawn. The lugs *k* must be drilled for screws to operate the crosshead shoes. These screw holes may be located by drawing horizontal lines on the piston-rod end of the lugs by means of the surface gauge. These lines must be the proper distance from the center line of the crosshead. After this the center of the lugs may be found by means of dividers and the circles representing the holes laid out.

112. Laying Out an Engine Bed.—The method of laying out an engine bed differs according to the type of bed, but the essential features of the process are the same. Usually the work has to be done in two or three operations, owing to the fact that some of the surfaces have to be machined before the last part of the laying out can be done.

The bed chosen for illustration is shown in Fig. 72 and is of the solid cast variety having bored guides, the bearing for the crank-shaft being cast solid with the bed, the cylinder

being arranged to bolt to the end of the bed. The bed casting *a* is placed on the laying-out or machine table, right side up, with blocks under it at intervals, as shown at *b*, *b*. Wooden strips are fitted across the ends of the guides, as shown at *r*, and across the sides of the jaws for the crank-shaft bearing, as shown at *c*. The centers of the guides are located on the wooden strips at both ends and those of the jaws at both sides. The bed is now tested with the surface gauge and set level by driving wedges between the bed and the blocks *b*. If either of the points located do not come true, the centers may be shifted slightly, care being taken to allow stock enough so that the guides and the jaws of the main bearing can be finished. Some beds of this type have their bottoms planed and others do not. If the bottom is not to be planed, it should be left as nearly parallel with the center line *d d* as possible. After having adjusted the centers of the guides and the jaws so that they all come level, and so that there is sufficient stock for finishing these parts, a surface gauge is set to the height of the center of the guides and the line *d d* is drawn on painted strips or spots on both sides and ends of the casting. If the bottom is to be planed, the line *f f* should be drawn parallel to *d d* and at the proper distance from it. After this the blocks *r*, *r* at the ends of the guides are removed and a line (either a piece of piano wire or a sea-grass fish line) is stretched through the guides along the line *e e*. The distance from this line *e e* to the center of the crank-shaft bearing is measured and the line *g g* established and marked off on the jaws of the bearing. Then the distances *h*, *h* are determined and the lines *i i* and *i' i'* drawn so as to determine the amount of stock to be removed from each end of the bearing.

The height of the governor pad from the bottom of the bedplate is marked off at *j* and the amount to be removed from the rocker-arm hub is laid off at *k*. After this, the end of the bed to which the cylinder is to be bolted is also laid off, the line *m n* being drawn, thus determining the amount to be faced from this end. The distance from the end of this face to the center of the bearing should agree

with the drawing. It will next be necessary to machine most of the faces already determined, after which the lines *o p*, *s t*, and *o t* may be laid off on the jaws of the bearing, and the center of the rocker-shaft hub at *k* may be laid off the proper distance below the center line. After the guides are bored and the end faced off to the line *m n*, the bolt circle may be drawn on this end and the bolt holes laid out in a manner similar to that described for the laying out of bolts and flanges, Art. **108.**

If the laying out is done on a table having lines running both lengthwise and crosswise, it will simplify matters to adjust the bed so that some one line corresponds with the center line *d d*, after which many of the measurements may be obtained from the lines.

113. Gauges for Laying Out Key Seats.—Different types of gauges have been adopted for laying out key seats, but for the ordinary run of work the form shown in Fig. 73 will be found very useful. This consists of a ring of cast iron *a* which is bored to the correct diameter *b* and which has the necessary keyways laid out in it, as shown at *c* and *d*. This ring may be slipped over the shaft, the keyways marked from it; it may then be removed and placed on a hub of the crank or wheel and the keyways on it also marked out, thus insuring the accurate location of these keyways.

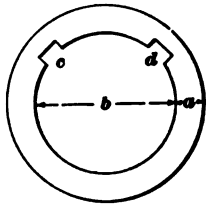

FIG. 73.

114. Laying Out Ends for Small Rods.—A convenient method of laying out the ends of small rods is shown in Fig. 74. In this, the piston rod *a* is placed on V blocks that bring it level. A stake or post *b* is put into a hole in the plate or table, to which it has been fitted, so that it stands perpendicular, as shown, with its upper end through the holes in the fork *c*, fitting it accurately. The top end of the post *b* has a small center-punch mark in it, which provides a convenient center from which to draw the circle *d* for the

rounded end of the fork. When the circle is drawn, the fork is set vertical by means of a square set on the table and the

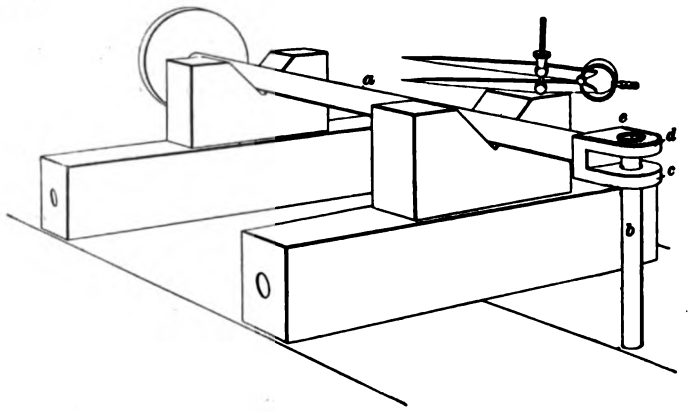

FIG. 74.

edge lines *e* drawn tangent to this circle with a surface gauge.

BENCH, VISE, AND FLOOR WORK.

(PART 3.)

FLOOR WORK.

BLOCKING.

INTRODUCTION.

1. Definition.—The term **blocking** is applied to the various pieces of material that are employed for temporarily supporting work that is being done on the erecting floor or in the field. The purpose of the temporary supports is either the alining of the work in some particular direction or directions, or the raising of the work above a certain position in order to make it more accessible.

2. The form of the blocking depends on the character of the work for which it is to be used and the service it is intended to perform. In a great many cases the simplest form and the most elaborate form of blocking can be and are advantageously used alongside of each other on the same piece of work.

3. The simpler forms of blocking merely serve to support the work; while the more elaborate forms can, in addition, be employed for moving the work to an extent depending on their construction. Among the simpler forms of blocking may be mentioned *wooden blocks*, *trestles*, and *iron parallel blocks*. Trestles are known by the name of **horses** in many localities. *Screw jacks* and *stone jacks* are

Copyright, 1901, by THE COLLIERY ENGINEER COMPANY.
Entered at Stationers' Hall, London.
All rights reserved.

examples of the more elaborate forms of blocking, and *hydraulic jacks* are often used for lifting work, but not for blocking or holding it.

WOOD BLOCKING.

4. Wooden Blocks. — For supporting the heavier classes of work, either on the erecting floor or in the field, wooden blocks are extensively used. The blocks are generally made square; they may have a thickness that varies from 2 to 14 inches, and a length that varies from 2 to 6 feet or more. Pine and similar soft woods are often used for blocking, on account of their low price; there is no particular objection to the use of the softer woods for work done away from the shop, where the chances are that the blocking will not be in use for any great length of time. Hard wood is preferable for work on the erecting floor, since it will keep its shape better and last much longer than the softer woods.

5. Wooden blocks are sometimes used for packing blocks that are to be placed under the clamps that secure work to the table of a machine tool. When used for this purpose, it is recommended that hard wood which has been sawed square across the grain be used. The block should then be placed on end so that the grain is at right angles to the table, on account of the fact that wood is less easily compressed in the direction of its length than across the grain.

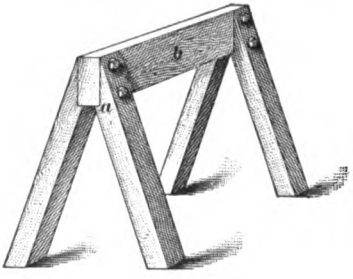

FIG. 1.

6. Trestles.—The trestle is used as a support for large, but comparatively light, work. It may be made as is shown in Fig. 1. The legs should be cut so as to leave a shoulder *a*, and should be bolted to the beam *b* by bolts passing through the legs and the beam. Lagscrews are often used instead

of through bolts, but their use for this purpose is not recommended. When great stiffness is desired, or when the weight to be supported is rather heavy, the legs may be tied together near the bottom by boards nailed across them. The only objection to this is that the trestles then cannot be stacked on top of one another when not in use. Trestles may be made of any convenient size; when they are used frequently they should be constructed of hard wood.

IRON BLOCKING.

7. Rectangular Iron Blocking.—The simplest and the most common forms of iron blocking are the solid parallel bars used in connection with machine tools. Large parallel bars, or **parallel blocks,** as they are often called, are usually made hollow, and are then well ribbed in order to safely carry the great weight often placed upon them.

8. Two excellent styles of parallel blocks are shown in Figs. 2 and 3. The block shown in Fig. 2 has a form that combines considerable strength with lightness. It is planed all over so that opposite sides are parallel and adjacent sides are at right angles. When a number of such blocks are made, it is advisable to make their corresponding dimensions equal, in order that the blocks may be used in pairs. The block shown in Fig. 2 is so constructed that a number of equal blocks may be piled up to suit the requirements of the work and then form practically a single block. Holes for dowel-pins are drilled in corresponding positions in the four faces of each block. The dowel-pins are made a good fit; they prevent the blocks from slipping on each other and at the same time permit them to be readily separated. One of the dowel-pins is shown at *a*.

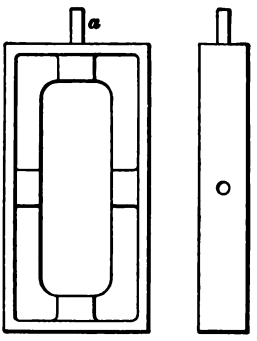

FIG. 2.

9. The block shown in Fig. 3 has the general form of a box; it is finished all over and is provided with **T** slots and **V** grooves, as shown. The **V** grooves in the sides permit the block to be used with either side up for round work; the

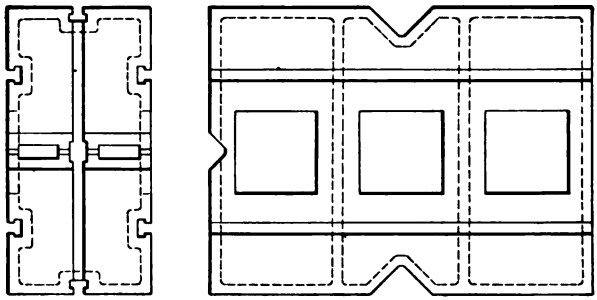

FIG. 3

T slots permit the work to be fastened to the block, or the block to be fastened in position by bolts. Blocks of this type may be used singly, or they may be piled up to any height that the work may require.

10. When making cast-iron parallel blocks, it is recommended that they be made in sets, in which all the blocks that are used together are exact duplicates. Blocks of different sizes may be made with a rectangular cross-section and with the short side of the large block equal to the long side of the next smaller size, and the long side of each from two to three times as long as the short side.

11. Cylindrical Iron Blocking.—A kind of blocking that is quite convenient for some classes of work, together with its application to a piece of work, is shown in Fig. 4. The blocking greatly resembles a short section of flanged cast-iron pipe; the sections may have the flanges strengthened by ribs, as, for instance, the sections *a*, *a*; or, the flanges may be plain, as those of the sections *b*, *b*. The flanges should be faced straight and parallel with each other, and the different sections should all have the same length.

12. A lighter form of pipe blocking is made of wrought iron or steel pipe that is threaded at both ends to receive flanges. The latter should be faced after they are screwed on the pipe.

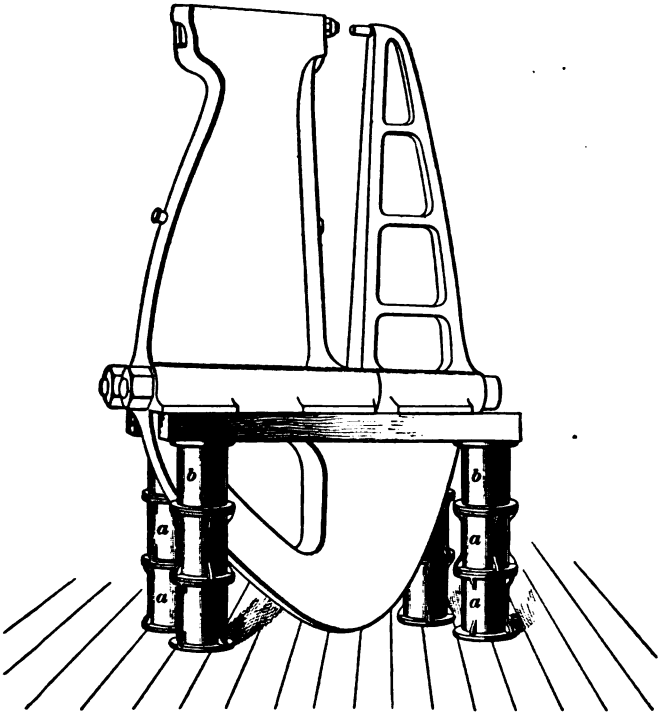

FIG. 4.

13. Adjustable Parallel Blocks. — The adjustable parallel block is illustrated in Fig. 5 (*a*). Its first cost is greater than that of ordinary parallel blocks, but it will be found both a time-saving and money-saving device on account of the fact that one adjustable parallel block displaces a number of the ordinary non-adjustable type. By far the greatest advantage of the adjustable parallel block lies in the fact that any thickness within the range of the block can be obtained. In other words, it can be adjusted exactly

to the requirements in any particular case. It consists of two separate pieces *a* and *b* that are movably connected together by a dovetail, which is clearly shown in the end view. After the two pieces have been carefully fitted together, the

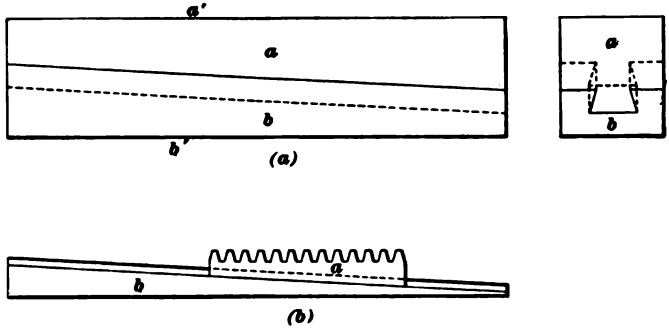

FIG. 5.

block is planed so that its surfaces are square with one another, and opposite surfaces are parallel. The dovetailed slide being at an angle to the surfaces *a'* and *b'*, the distances between these two surfaces may be varied by sliding the pieces upon each other. In order that the pieces may not slide under a heavy load, the inclination of the slide to the surfaces *a'* and *b'* should not exceed 10°.

14. An adjustable parallel block constructed as shown in Fig. 5 (*a*) may be made any convenient size and will be found a very useful appliance for the various machine tools. The block may be, and often is, used as a gauge by which to set a planer tool for planing work to an exact height above the planer or shaper table.

15. If the base *b* is extended to two and one-half times its ordinary length, as shown in Fig. 5 (*b*), and rack teeth are cut the whole length of *a*, a good gauge for getting the exact thickness of the racks used for various machine tools is obtained. The teeth in the part *a* are placed in mesh with the pinion and the part *b* is set so as to give just the right fit between the pinion and the rack seat. After the gauge is set, it may be removed; the pieces of rack, which

are generally left too thick, are now finished to the size indicated by the gauge. The pitch of the teeth cut in this gauge must, of course, be the same in every case as that of the pinion.

JACK-SCREWS AND HYDRAULIC JACKS.

16. Jacks.—In addition to the parallel blocks just described, the lifting device known as a **jack** is almost indispensable in all kinds of floor work, especially in erecting. Jacks are made in a large variety of styles and sizes, from those intended for leveling up light work on the tables of machine tools, to the heavy jack-screws and hydraulic jacks capable of raising or supporting 150 tons or more, and consequently are used for a wide range of work.

17. Simple Leveling Jack.—The simplest form of jack consists of a circular cast-iron foot, which is faced at the bottom and has a tapped hole through it. A square-headed screw with a slightly rounded top, as shown in Fig. 6, is used for raising the work. This style of a jack-screw is used principally in leveling up work on the tables of machine tools, although it will be seen later that jacks resembling this are sometimes made in large sizes and used in erecting.

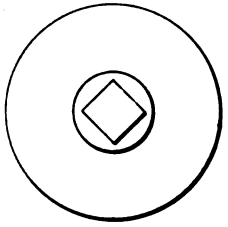

18. Adjustable-Top Leveling Jacks.—A good little case-hardened jack, with an adjustable cap, which is very serviceable for machine-tool work and light assembling, is shown in Fig. 7 (*a*). The body *a* is tapped to receive the adjusting screw *b*, which has a square top and holes for the rod *c*. The cap *d* is attached to the screw by a ball-and-socket joint, so as to permit the cap to accommodate itself to the angle of the work. When a solid or conical top

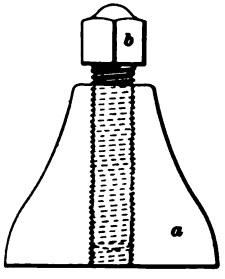

FIG. 6.

is more suitable for the work, a second screw *c* is substituted for *b*. The foot of the body *a* is counterbored to fit the

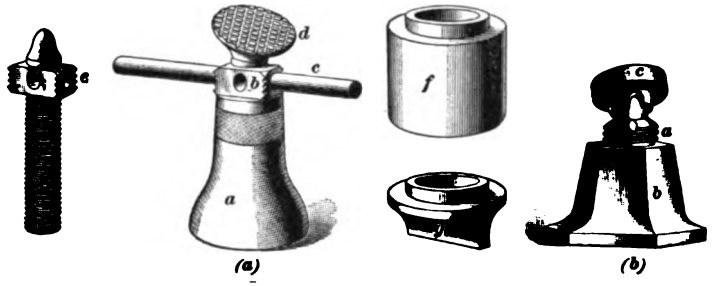

FIG. 7.

projection on the auxiliary base *f*, which may be placed under the jack when a greater height is required. Auxiliary bases of different heights may be used as needed. A special base *g* is also furnished with the jack and is used where this form of base is more suitable.

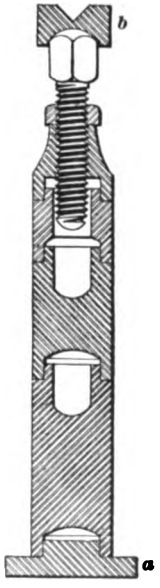

FIG. 8.

19. Another very serviceable jack for light erecting and for setting work on machine-tool tables is shown in Fig. 7 (*b*). A steel screw *a* having a square thread is screwed

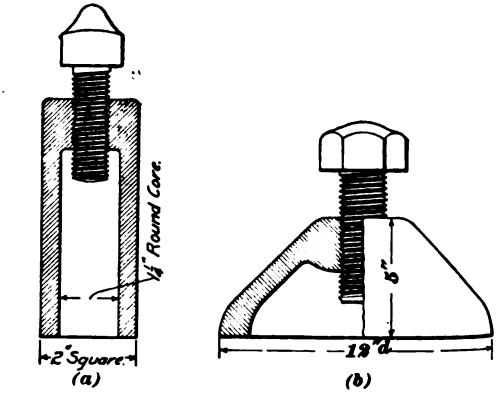

FIG. 9.

into a cast-iron base *b*, the bottom of which is faced. A cap *c* is attached to the screw by means of a ball-and-socket

joint. This jack serves the same purpose as the one shown in Fig. 7 (*a*), and, like that jack, is useful for work having the surface that is to be supported at a slight inclination to the supporting surface.

20. Sectional Jack. — A jack-screw that embodies some good features is shown in Fig. 8. The body is made up in sections, as shown, and has a base *a* that can be used with one or all of the sections. A removable cap *b*, which is hollowed out on the lower side so as to fit the rounded head of the screw and which has a V groove cut into the upper side, is a great convenience for some classes of work. This jack, as found on the market, may, with its various bases, be adjusted in height from about 1½ to 6 inches.

21. Laying-Out Jack.—A jack that has been found very serviceable in laying out is shown in Fig. 9 (*a*). A screw with a square head, which is rounded at the top, is screwed into a square cast-iron body. The body may be cored out as shown, in order to lighten the jack.

22. Simple Erecting Jacks.—Fig. 9 (*b*) illustrates a simple and serviceable erecting jack that can be made at

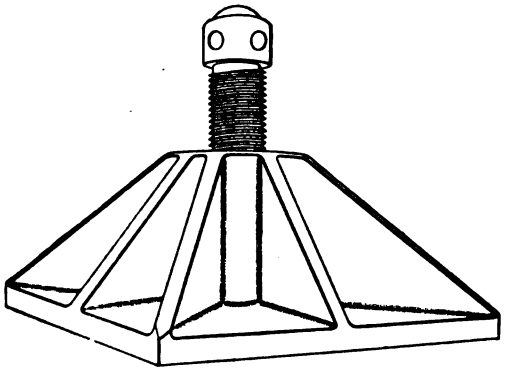

FIG. 10.

very small cost. These jacks are low, yet have enough adjustment for a great deal of ordinary erecting work. Another jack of the same class, and used for the same kind of

work, is shown in Fig. 10. It is made strong and rigid in order to serve for heavy work, and has a large base, which is a very great advantage either upon earth floors or where the floor is not perfectly rigid.

23. A great deal of time may be saved by using jacks, as they can be adjusted more quickly and more accurately than the same adjustment could be made with blocks and wedges. Any number of jacks permitted and required by circumstances may be used at different points of a heavy part in order to support it properly.

24. Heavy Erecting Jack. — The jack shown in Fig. 11 may be used for work that is excessively heavy and where there is much vibration. The screw is made with a square thread and has a cap *a* mounted on a spherical head. The screw is turned by means of a round bar inserted in the holes in the enlarged part *b*. The foot *c* of the jack is made heavy and stiff. The upper part of the foot, that is, the threaded portion, is slotted as shown at *d*, so that when the screw has been adjusted to the proper height it may be clamped by means of the bolt *e*, thus preventing any rotation of the screw while the work is being done.

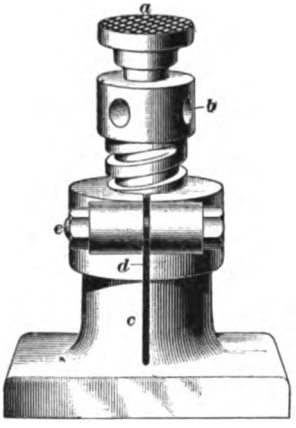

FIG. 11.

25. Lifting Jacks.—When jacks are required for the purpose of lifting, a different design with a greater screw travel becomes necessary. Fig. 12 is an illustration of a jack of this class. The head of the screw is made with a cast-iron cap *a* that rests on a solid collar *b*; the upper end of the screw is turned down to pass through the cap and is beaded over to prevent the cap from coming off. A round bar inserted in the holes at *b* is used to turn the screw.

It will be seen that this jack cannot be used with a straight handle in places where the screw cannot be turned through an angle of at least 90° at each setting of the bar. By bending one end of the bar through an angle of 22½°, and inserting the bent and straight ends alternately, the angle through which the screw turns for each insertion of the bar is greatly reduced. It is thus made possible to operate the jack in a comparatively narrow space, but the amount of time required for the constant resetting of the bar is so great that this method becomes objectionable where much work of this kind is to be done. A jack fitted with a reversible ratchet for operating the screw is preferable in most cases, since a great deal of time and hard work is saved by its use, as the handle of the ratchet can be turned back more easily and in much less time than a bar can be taken out, turned end for end, and again inserted. With a properly formed ratchet, the jack can be operated in a very much smaller space than one operated by a detachable bar.

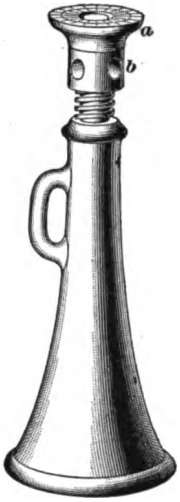

FIG. 12.

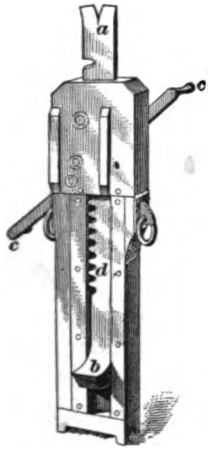

FIG. 13.

26. Track and Stone Jacks.— When erecting work in a shop where the facilities for handling are not good, and also for handling it upon the final site, **track jacks** and **stone jacks** are very often used, on account of their great convenience. Fig. 13 illustrates a stone jack regularly made to lift 12 tons through a height of about 20 inches. The load is carried either on the head *a* or on the toe *b*. The work is raised by turning the handle *c* about its center, thus turning a train of reducing gears that engage with the

rack *d*. The track jack embodies the same principles as the stone jack, but is operated by a lever instead of a gear-train.

27. Hydraulic Jacks.—Hydraulic jacks of different kinds are used very largely in well-equipped machine shops. A hydraulic jack has a plunger that operates in a cylinder into which water, alcohol, or oil is pumped. When hydraulic jacks are subjected to cold temperatures, alcohol must be used, on account of its resistance to freezing. The lifting is done by the pressure of the fluid in the cylinder. A small hand force pump is contained in the body of the jacks, by

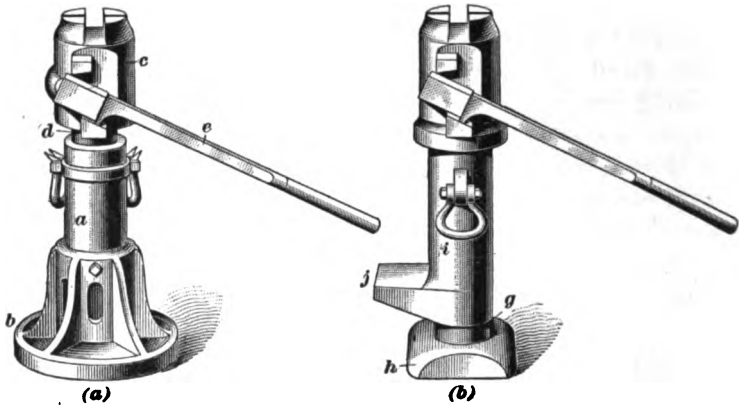

FIG. 14.

which the necessary pressure is obtained. Fig. 14 (*a*) shows a hydraulic jack in which the cylinder *a* is a part of the foot *b*, while the head *c* is attached to the plunger *d*. The pump mechanism, which is enclosed in the head, is operated by the handle *e*.

28. Fig. 14 (*b*) illustrates a hydraulic jack in which the plunger *g* is attached to the foot *h*, and the cylinder *i* is attached to the head. The pump mechanism is practically the same as in Fig. 14 (*a*). The arrangement shown in Fig. 14 (*b*) permits a lifting toe *j* to be cast on the lower end of the cylinder, thus making it possible to secure a low

hold, which is not possible with the arrangement shown in Fig. 14 (*a*).

29. Hydraulic jacks range in capacity from 3 to 150 tons; the larger sizes are sometimes used as hydraulic presses by attaching them to the work by means of suitable bars. In such a case, a convenient portable press is obtained that is suitable for work that cannot be taken to a stationary press.

MACHINE FOUNDATIONS.

30. Introduction. — The erecting of a machine is usually understood as including both the erecting in the shop in which it is made and the erecting upon the final foundation. The two differ principally in the amount of fitting and adjusting that is to be done and the facilities for handling the heavier parts. The fitting and the adjusting of all the parts are done in the shop, except in cases where some of the parts are dependent on the foundation, or must be fitted to other parts that are not available in the shop.

31. The machine should in all cases be made as complete and as perfect as possible before it leaves the shop, since the entire equipment of the shop is available, and the work can be done to better advantage. Any fitting that is necessary while setting up the machine upon its final foundation must be done with a few light tools that can easily be shipped, and with such makeshift devices as the workman may be able to make. His ingenuity is often severely tested, and the most skilful workman frequently finds it impossible to produce the grade of work that could easily, and at a much smaller cost, be produced in the shop. It is therefore a matter of economy to be sure that every part is properly fitted and the entire machine as complete as possible before it is shipped. The erecting on the final foundation should consist simply of putting the parts together and making the final adjustments. This is, at best, not an easy task, especially when the machine is heavy, as the facilities

for handling are almost invariably temporary makeshift devices that operate slowly.

32. Permanent Foundation and Foundation-Bolt Templet.—The permanent foundation is usually built up of concrete, brick, or stone. In building the foundation, due provision must be made for the foundation bolts. Sometimes these bolts are built solidly in the foundation, while at other times they are set in pipes that hold the concrete or cement while it hardens yet permit the bolts to be adjusted or removed entirely, if that should be necessary. In either case the bolts must be carefully set, so that when the bed of the machine is lowered in place they will meet the bolt holes. It is usually best to make a wooden templet having the exact thickness of the bed parts, with holes in the exact location of the bolt holes in the bed through which the bolts pass. It will be seen that by locating such a templet carefully where the machine is to stand, the bolts can be set to the proper height and in the right place; the foundation may then be built up without any danger of a misfit.

ERECTING FLOORS.

33. Introduction.—The erecting in the shop is done on a floor, the construction of which depends on the weight of the machines and the condition of the earth on which it is built. When the earth is dry and hard, or there is a rock bottom to build upon, the foundation of the floor may be shallow; on the other hand, when the earth is wet or unstable, a deep and solid foundation should be built up. The depth of the floor foundation depends on the weights of the heaviest parts that are liable to come upon it.

34. Erecting floors are made up in different ways, depending on the class of work to be done; that is, whether they are intended for permanent use for one class of work, or for a wide range of work, the needs of which cannot well be anticipated and for which changes must constantly be

made. The first cost, also, in many cases, becomes an important factor, and determines the style of floor used. To meet the various requirements, the following kinds of floor are made: *earth*, *wooden plank*, *scantling*, *wooden block*, *brick*, *concrete*, and *iron plate*.

35. Earth Floors.—In places where the earth is of a firm and solid character and little money can be spent for a floor, the earth is simply leveled and packed down so as to make a smooth, hard floor. Sometimes the surface is formed of a layer of iron chips from 1 to 4 inches thick that are mixed with salt or other material that will cause them to rust. When they are well packed, the surface will rust into a solid smooth mass and then form a very good floor. Besides being cheap, the earth floor can easily be dug up to form a pit to enable any machine parts that project below the floor line to be attached. On the other hand, there is always more or less loose sand upon the surface, which is liable to get into the working parts of a machine and thus cause trouble.

36. Single-Plank Floor.—A comparatively inexpensive floor consists of 3- or 4-inch yellow-pine planking, laid across joists that are placed close together and are well braced or bridged sidewise. The planks are sometimes covered with a diagonal floor of $\frac{3}{4}$-inch to $1\frac{1}{4}$-inch pine. The spaces between the timber should be ventilated. This style of floor is, however, not very rigid, and, hence, the heaviest grades of work require something more solid.

37. Double-Plank Floor.—A more rigid floor than the plank floor previously mentioned is illustrated in Fig. 15. The floor is built up of $2'' \times 4''$ pine scantling a, a, with a facing of from $\frac{3}{4}$-inch to $1\frac{1}{4}$-inch pine boards laid diagonally, as shown. The scantlings are laid upon timbers c, c, which are laid in a concrete bed. The thickness of the concrete depends largely on the condition of the ground, but if it is of a firm grade, 14 inches should be sufficient for all ordinary purposes. The bed is built up by first laying a course of coarse stone, as shown at d, and running in some cement,

then following with successive finer grades of broken stone, and finishing with a very fine grade. Air spaces *c*, *c* are left between the timbers; these may be ventilated by means of openings through the walls or by holes bored through the

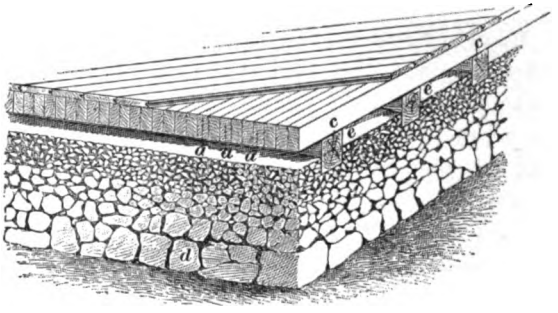

FIG. 15.

floors. Many persons claim that this precaution should be taken with all wood floors to prevent rotting. The timbers *c*, *c* are made 4 in. × 4 in., 4 in. × 6 in., or 6 in. × 6 in., depending on the duty for which it is intended. When the 4″ × 6″ timber is used, it is laid on its flat side. The distance between the timbers should not be much greater than the thickness of the concrete, and it is generally thought best to limit the distance to the thickness. This makes an excellent floor, and, by some, is preferred to all other styles.

38. A very good floor is made with a base of tar concrete. The ground, after leveling, is covered to a depth of about 6 inches with a layer of sand that is well rolled down. On top of this, 6 inches of tar concrete is placed; the concrete is composed of small broken stones covered thickly with heated tar, and, after leveling, is rolled with a heavy roller. Finally, a layer of sand mixed with considerable tar and some asphalt is applied, while hot, to a depth of about 1½ inches and after it is rolled down, is allowed to harden. When hard, a layer of 3-inch spruce planking is placed on top of the asphalt, and 1⅛-inch dressed maple flooring in strips about 4 inches wide is finally nailed crosswise to the spruce planking. The maple flooring is not tongued and

grooved. It will be observed that no air space is left between the concrete and the flooring in this design, and that the planking is laid directly upon the concrete. One prominent firm states that they have not experienced any trouble by the rotting of the planking, as is claimed by many to occur when the flooring is laid directly on the concrete. The quality of the timber used and the amount of dampness in the location are important factors to be considered when deciding upon the kind of floor to use. A tar concrete floor is rather expensive, but very solid.

39. Wooden-Block Floor.—A substantial floor may be made of sawed wooden blocks, either cedar, pine, or oak, that are placed on top of a concrete bed. One prominent firm has constructed a wooden-block floor in the following manner: After leveling the ground, a layer of cinders 6 inches thick was placed on the ground and thoroughly rolled down with a heavy steam roller. A bed of concrete 4 inches thick was laid on top of the cinders and thoroughly leveled. The blocks were 6 in. × 4 in. × 4 in., sawed from well-seasoned oak; their ends were dipped into liquid asphalt, and the blocks were then laid directly on top of the concrete bed.

Another firm omits the cinders and places the concrete bed directly on the leveled ground, making the concrete bed about 8 inches thick. The blocks are cedar wood sawed to 3 in. × 12 in. × 5 in.; these are placed end to end and butting together on the concrete, so that their height is 5 inches. A space of $\frac{1}{4}$ inch is left between adjacent rows, which is filled with a mortar composed of 1 part of Portland cement to $2\frac{1}{2}$ parts of sand.

The advantages of a wooden-block floor are as follows: (1) It is easy on the feet of the workmen. (2) The work is not so liable to slip on it as on other kinds of floors. (3) Cleats, braces, etc. can be readily attached to the floor. (4) The expense of repairing it is slight.

40. Brick Floors and Concrete Floors.—Occasionally, a floor is made of brick laid in cement and placed on

a solid concrete foundation. Sometimes hard paving bricks that are laid on edge are used instead of ordinary bricks, and cement is run in between them to fill the cracks. In some localities, a concrete base is covered with a thick layer of cement, which forms a very smooth and hard floor that is impervious to moisture.

41. Cast-Iron Plate Floors. — The cast-iron plate floor is perhaps the best floor for large work, but its great expense has in the past prevented its coming into general use. It is, however, adapted to so many uses that, in many shops, the expense is warranted, since it serves as a laying-out table, a machine-tool foundation, and a machine-tool table, and, also, as an erecting floor. In large shops, especially where there is a large amount of work that is too heavy to be machined in the stationary machine tools, such a floor provides an excellent means for setting up the heavy parts and doing the machining with portable machine tools, such as radial drills, traverse head-shapers, slotting machines, special milling and grinding fixtures, etc., which may be driven by means of ropes, electric motors, or compressed air.

42. One or two large horizontal boring mills may be set alongside an iron-plate floor in such a manner that the floor forms the table of the machines; this arrangement has been found very convenient in shops where much boring is done on large pieces. A planer set with the side of its bed against such a floor may also be made to operate on a heavy part fastened upon the floor, by means of a special head bolted to the table.

43. The top of the floor should be planed true, and should be provided with T slots for the purpose of allowing the work or portable machines to be bolted to it. The slots are usually made at right angles to each other, although sometimes they are all made parallel to one side; occasionally, when much circular work is to be machined upon the floors, the slots are run in concentric circles with radial slots crossing them at regular intervals.

44. The plates are generally made stiff enough to allow them to be supported upon masonry columns without deflection. This greatly facilitates the leveling up of the plates, when, for any reason, they get out of true. Sometimes they are laid in a solid bed of concrete. The plates are then supported at every point, and when the foundation is heavy, and the plates are leveled up very carefully when they are first set, the floor is quite satisfactory for some time; but if, for any reason, the foundation should yield slightly, or the plates should not be set quite right at first, it is impossible to set them true without taking up the whole floor and resetting it completely. This is a very expensive piece of work, and, for this reason, the masonry supports with openings between them that make all parts below the floor accessible are generally preferred. Iron plates are sometimes objected to because they are cold and slippery, but after workmen have become accustomed to an iron floor, these objections are soon forgotten.

FLOOR PITS.

45. Introduction.—It is often necessary in erecting large work to make provision for parts that extend below the floor line, or to get at some of the parts from beneath the machine. For this purpose, pits are made at suitable places in the floor. These pits are often made with cast-iron floors about their edges, and are often lined with plates with T slots running down at intervals on the inside. Pits are also used in machining very large pieces, such as flywheels that are too large to be machined on a boring mill or in a lathe.

46. The construction of pits, like the construction of erecting floors, depends very largely on the class of work done in the shop. When a definite line of manufacture is carried on, a pit suited to the needs of the work can be built, but where work of a miscellaneous character is done, it is

impossible to anticipate the needs that may arise at any time, and a pit that can easily be enlarged or changed will be the most suitable.

47. Pit Construction for a Definite Line of Work.—Fig. 16 shows a pit that is built for the purpose of erecting vertical boring mills. The sides of the pit *a* are built up of brick or stone, and iron plates *b*, *b* are placed all

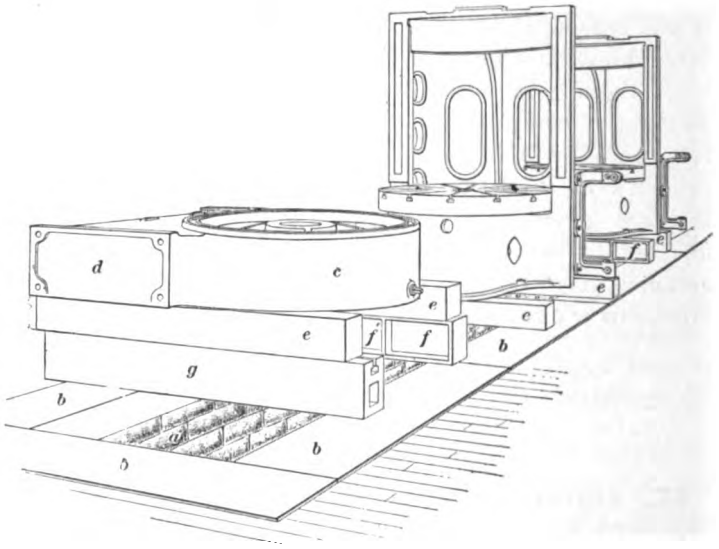

FIG. 16.

around the mouth of it, as shown. A convenient size of pit for this class of work is made about 4 feet deep by 4 feet wide; the length depends on the amount of work to be done.

48. The bed of the machine that is being erected is usually mounted upon parallels placed across the pit, as shown in the illustration. It will be observed that two styles of machines are shown in Fig. 16. The machine *c* has the housings attached to the sides of the bed at *d*, and the table is rotated on a spindle that extends below the bottom of the bed. The lower end of the spindle is carried in a step bearing that is placed in a frame which is bolted to the

bottom of the bed. In order to fit this frame properly, it is necessary to have plenty of room beneath the bed; for this reason, the bed is placed upon two parallels on each side. The other two machines shown are self-contained. The housings and the bed are one casting, and the spindle of the table does not extend below the bed. In this case, one set of parallels is sufficient to support the machine during erection.

49. Fig. 16 incidentally illustrates several styles of large parallel bars. The bars *e*, *e*, which are made of cast iron, have the general form of a box that is open at the bottom and is subdivided into several compartments by webs. These webs tie the tops and sides together and greatly stiffen the bar. The object of making the bars hollow is to reduce their weight. It is an advantage to have all the bars in a set made the same height, since three or more can then be used for supporting a large piece of work having a plane surface at the bottom.

The parallel bars *f*, *f* have an **I** section and are strengthened at regular intervals by ribs, as, for instance, by the one shown at *f'*. A large parallel bar, as the bar *g*, for instance, is occasionally made with a rectangular hole and a **T** slot cored in it. The **T** slot permits work to be attached to the bar by means of bolts and clamps.

50. Large Masonry Pit.—Fig. 17 shows a large masonry pit intended for large and heavy work. For a given class of work, such a pit should, when possible, be designed so that it will be suitable, especially to that class of work. For general work, a pit must be designed to cover as broad a range of work as possible. A pit about 40 feet long, 12 feet wide, and 20 feet deep is a size well adapted for heavy work. The one shown in Fig. 17 suggests a design that is suitable for most cases. The ends *a*, *a* and the sides *b* may be built up of stone, while the bottom *c* is made of concrete and faced with cement. The top of the pit is surrounded with cast-iron plates *d*, *d*, provided with **T** slots, the plates being planed and set level. The ends of the pit may be

built up in steps, as shown, or may be made straight, as indicated by the dotted lines *e*, *e*.

51. When the pit is not in use, it is covered with a plank floor, a section of which is shown in place at *f*. The floor is supported upon **I** beams, as *g*, which are set in pockets *h*, *h*, in the sides of the pit. The covering floor is

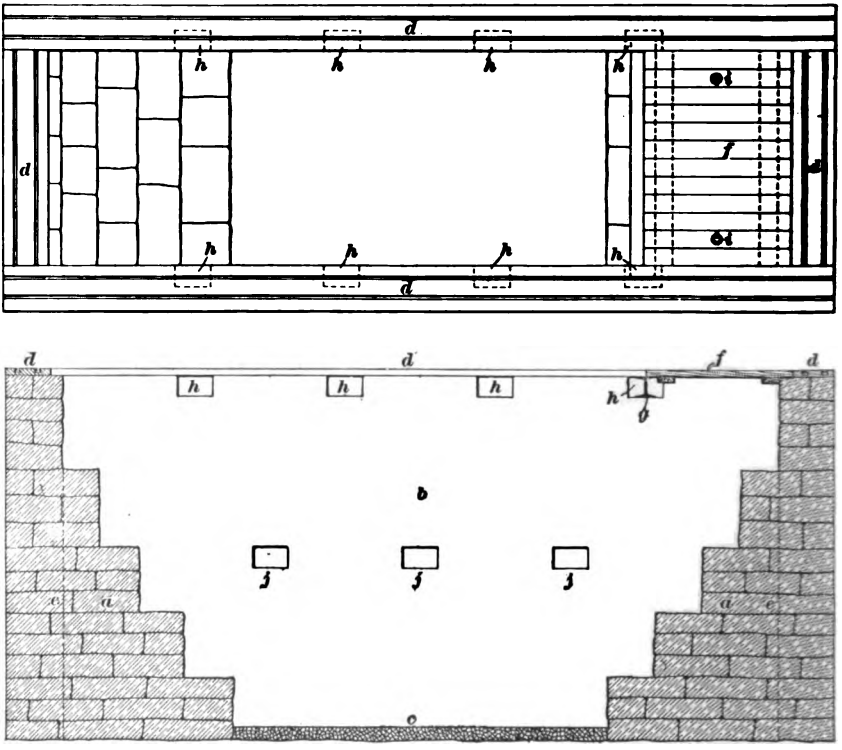

FIG. 17.

made up in sections so that it can easily be removed, and each section is provided with two rings *i*, *i* to facilitate the handling. The rings are attached with staples and let into the plank, so that when they are not in use they lie below the surface of the floor. These pits may be made with one

or more sets of pockets *j*, *j* to receive the **I** beams, upon which to support sections of the floor when the full depth of the pit is not required. Such a pit may be used either for erecting or for machining large parts, as described later.

In some shops it is preferred not to floor the pit over. In such a case it is advisable to place a stout removable hand railing around the pit to prevent workmen from stumbling into it.

52. Another style of pit, which has the advantage of being both cheap and easily changed or enlarged, is shown in Fig. 18. The earth is simply dug away where the pit is to go, and the floor, which rests upon heavy horizontal tim-

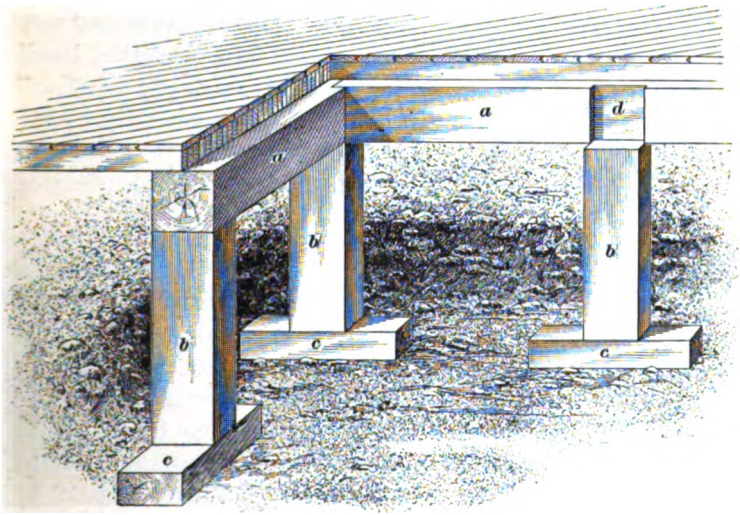

FIG. 18.

bers *a*, *a* is supported about the outside of the pit by means of vertical timbers *b*, *b* standing upon blocks *c*, *c*. The floor, which covers the pit when it is not in use, is made in sections and is supported by timbers that are set into pockets *d*, which are cut into the side timbers.

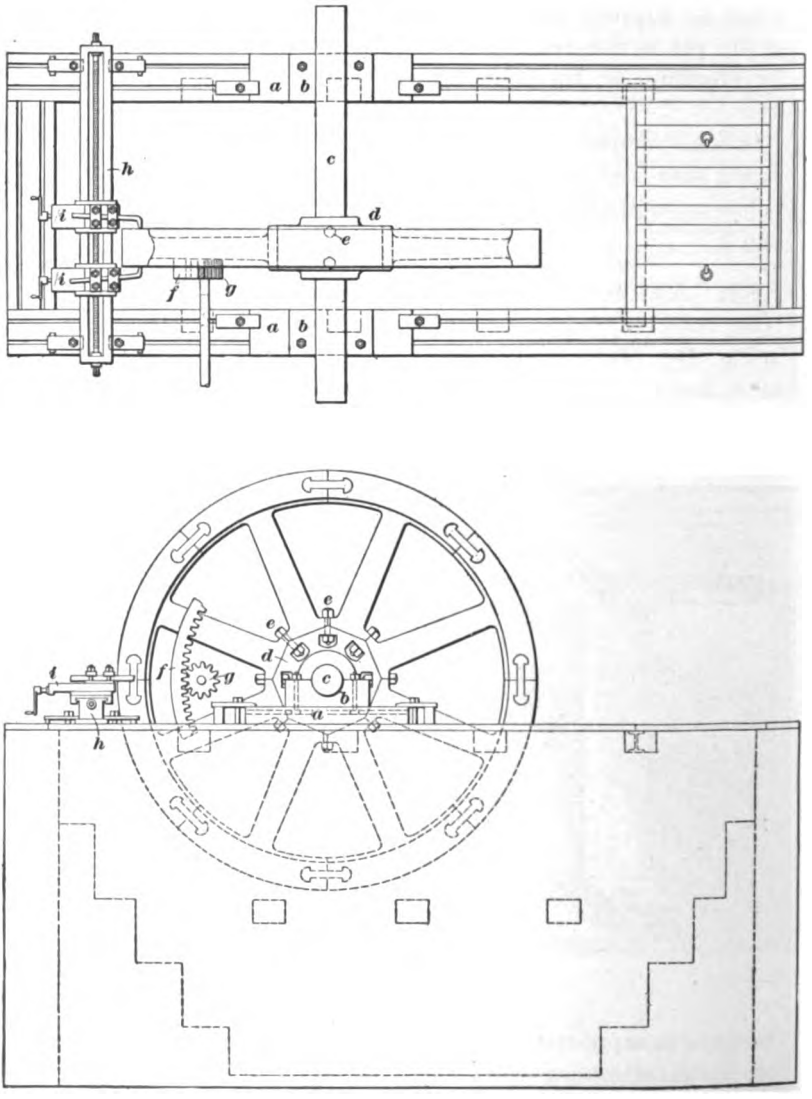

FIG. 19.

USE OF ERECTING PIT.

53. Assembling a Flywheel.—Large flywheels, rope wheels, gear-wheels, and other similar wheels are usually assembled in the erecting pit. The assembling and machining of the rim of a large built-up flywheel is an excellent example of the use of the erecting pit. One method of doing this work is here described. Parallel bars *a*, *a*, Fig. 19, are bolted opposite each other to the plates surrounding the mouth of the pit, and temporary bearings *b*, *b* that will bring the center of the shaft *c* about 30 inches above the floor level, are placed on top of the parallel bars so that they are fairly in line with each other. The shaft *c* with the hub *d* on it is now picked up by a crane and lowered into the bearings, which are properly alined to suit the shaft. The bearings, which do not need any caps, are now bolted down to the parallel bars. In another method of lining the bearings, the shaft is blocked up until it is level; the bearings, which are considerably larger than the journals, are shifted into place and bolted down, and Babbitt metal is poured into the bearings around the journals.

54. All the joint faces of the sections of the rim having been properly faced prior to the erection, one section is picked up by the crane and gently lowered on the hub, to which it is fastened while in a vertical position by temporary bolts. The shaft is now revolved sufficiently to bring the next seat of the hub to a horizontal position, and after the fastened section has been securely blocked to prevent rotation of the shaft, another section is lifted into place and is attached to the hub and the first section. This operation is repeated until the wheel has been assembled. The holes in the arms and hub are now reamed one by one to match exactly, and the permanent bolts are then carefully fitted, driven home, and the nuts securely screwed up, as shown at *e*, *e*.

55. In order to turn the sides and face of the rim, means must be provided for revolving the flywheel. A common

method is to bolt a large annular gear, which, for convenience, is made in short sections, to the arms of the flywheel. One of these sections is shown at *f*. A pinion *g* is then placed in mesh with the gear and is driven either by a rope drive, by a belt from an overhead shaft, by an electric motor, by a small steam engine, or by a compressed-air engine, as is most convenient. A heavy bed *h* is then bolted across the pit; it may carry two slide rests *i*, *i*, in order to allow both sides of the rim to be finished at once.

56. If the flywheel is to have the rim polished, a grinding rig carrying a suitable emery wheel may be mounted on the carriage *i*. The emery wheel, which is driven in any convenient manner, is then fed slowly across the surface that is to be ground while the wheel is revolving at a suitable speed.

57. Cutting a Large Spur Gear.—Spur gears 50 feet or more in diameter may be cut in the following manner: They are built up with as much in the pit as will bring the center of the shaft within as convenient a working distance of the floor as possible. The spaces between the teeth are generally cast in with enough allowance to insure cleaning up.

58. A rest or bed similar to that used for turning, but carrying a back-geared milling head that may be traversed the whole length of the bed is placed across the pit, parallel with the shaft that carries the wheel. The bed is blocked up until the axis of the milling spindle and the axis of the wheel shaft are at the same height above the floor. The wheel is generally erected with the top of the teeth left rough; these may be finished by means of a milling cutter fed across the face of each tooth in succession, thus bringing the gear blank to the correct outside diameter. The pitch circle is next laid out on one side of the rim, and is divided as accurately as possible by means of a pair of dividers. In order to insure accurate spacing of the teeth, it is well to go around the pitch circle with a pair of trams, using as long a cord as possible, and then subdivide the large divisions with dividers. The thickness of the teeth on the pitch circle is

then laid off and all points of division are carefully marked with fine prick-punch marks. The spacing for the teeth is then obtained by making the division marks representing the circular pitch successively coincide with the end of a stationary pointer. Suitable clamps will have to be provided for holding the wheel still while the cuts are taken.

59. A pair of end mills may be used for cutting the tooth spaces, of which the roughing cutter is about $\frac{1}{16}$ inch smaller in diameter than the finishing cutter. The section of the finishing cutter must be exactly a duplicate of the profile of the space between the teeth. The roughing cutter may have nicked teeth, but the finishing cutter should be left plain. Both cutters can advantageously be given spiral cutting edges.

60. The cutting of large gears in the manner just explained may be expedited by using two cutting heads for roughing out the spaces and facing the end of the teeth, placing a cutting head at each side of the wheel. The finishing should be done by one head entirely.

61. Assembling a Large Rope Wheel.—Large rope wheels are usually built up, the rim, hubs, and arms being separate pieces. The rim itself in many cases is made in segments. The following description shows the method that is in vogue in one prominent shop for assembling such a wheel, the wheel whose assembling is here described being 25 feet in diameter and having a face 7 feet wide, which contains 36 turned grooves for $1\frac{3}{4}$-inch rope. The wheel has two hubs with 10 arms for each hub; the rim is built up out of 10 segments that are securely bolted to one another. The arms are bolted to the hubs and to the rim.

62. The hubs having been forced on the shaft, the latter is placed in temporary bearings placed at opposite sides of the erecting pit. The arms, the bolt holes in the ends of which have been previously drilled and reamed, are now placed in position, two opposite arms on each hub at a time, and are supported on timbers placed across the pit. They are

then attached to the hubs by temporary bolts, and the holes in the hub are reamed in line with those in the arms. The permanent bolts are now fitted, driven home, and secured by nuts. All the arms having been fastened, the sections of the rim are attached one by one until the wheel is completely assembled.

63. For turning the grooves for the ropes, the wheel is driven by one of the methods explained in Art. **55.** A bed that carries one or more slide rests having been bolted across the pit, the face of the wheel is turned to the right diameter and the position of the grooves is then laid out. Square-nosed tools are used to rough out the grooves, a wide one being employed for the wide part of the groove and narrow ones for the narrower parts. The bottom of the groove is generally made round; hence, the finishing tool for this part is made with a round nose having the radius called for by the drawing. Right-hand and left-hand side tools are used to remove the remaining stock and to bring the sides of the grooves to the correct form for finishing. The right-hand side tool is used in one slide rest and the left-hand tool in the other slide rest in order to prevent undue thrust in one direction, as would result if two tools cutting in the same direction were used at once. The finishing is done with a formed spring, or gooseneck tool, in order to have the finished work free from chatter marks. The sides of the rim are turned square with the face, and any special turning that may be specified on the drawing is done.

64. The wheel should be rigidly inspected as the turning progresses, and if cracked or defective castings are found in the rim, they should be replaced before the wheel is taken down for shipment. A defective or broken segment may have a new one fitted in its place, and the new segment may be turned without great loss of time by using a reversing countershaft and running the one segment back and forth past the tools until it is roughed out like the rest and then taking a light finishing cut over the whole wheel. This method effects a great saving on a large wheel that

may make only 1 revolution in 5 or 6 minutes. The work having been completed, the different parts are plainly marked to show which way they go together, and the wheel is then taken apart for shipment.

65. Using Erecting Pit for High Work.—Vertical steam engines and other machines that are too high to be erected on the erecting floor may often be erected on the bottom of the erecting pit, thus gaining the extra head-room afforded by the depth of the pit.

DRIVING FITS, PRESS FITS, AND SHRINK FITS.

66. Introduction.—Two pieces of work may be joined together by creating sufficient friction between them to prevent separation except by undue means. This is done in practice by making one part slightly larger than the other part, and placing the larger part into the smaller one, or placing the smaller part over the larger one.

67. The parts that are to be joined may be placed together either by pressing or driving one of them into or over the other, or one part may be expanded by heating and it may then be dropped over the other and left to cool. Fits that are made by driving the pieces together are called **driving fits,** while those in which the pieces are pressed together are called **press fits.**

68. When one piece is expanded by heating and is then dropped over the other, it tends to return to its original size in cooling, and if the proper allowance has been made it produces a very rigid and durable joint. This is called a **shrink fit.** Shrink fits are frequently applied in making the joints of flywheels, strengthening short pipe bends, etc. In all these cases a link or bolt, which is made a little shorter than the place in which it is to go, is heated until it goes freely into place, and then allowed to cool, thus drawing the parts tightly together.

69. Either the driving fits, pressed fits, or shrink fits, when properly made, produce excellent joints, but when a

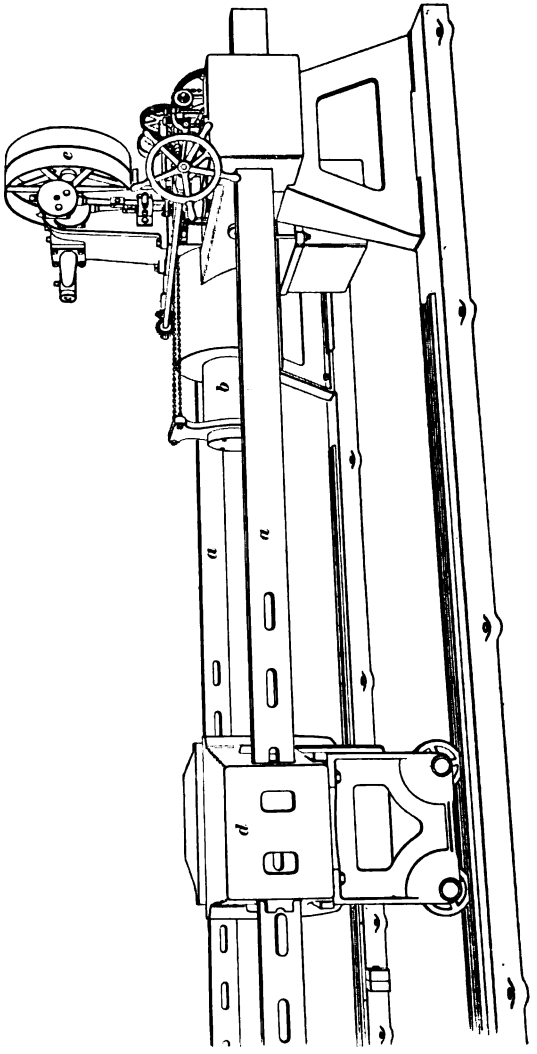

FIG. 20.

shop is properly fitted up with presses, and the character of the work permits it, the pressed fit is preferred by many.

When no press is available, the parts may be driven together with hammers or rams. There are, however, cases where neither a press nor a ram can be applied, and the shrink fit may be used to the best advantage.

70. General Construction of Hydraulic Press.—Fig. 20 shows one style of a hydraulic press that is made of 200-, 300-, and 400-ton capacity, and is used for such work as pressing the cranks on engine crank-shafts and general pressing on or off in making press fits. The tie-bars *a*, *a* are placed on either side, so that the work can be lowered into, and lifted out of, the press with a crane. For use in railway shops, the tie-bars are placed one below the floor and the other overhead, thus enabling the rolling in and out of the car wheels or locomotive wheels. The same tie-rods, or similar ones, may be used with hydraulic jacks for portable-press work.

71. This particular machine will take 10 feet between the tie-bars and 25 feet between the ram and sliding head. The ram *b* is 14 inches in diameter, has a stroke of 4 feet, and is provided with a counterweight so that it returns automatically when the release valve is opened. It is provided with a safety valve that can be set to open at a desired pressure and is then locked up in a box cast on the cylinder, which makes it impossible to push more than a specified amount. The pressure gauge is graduated for tons pressure on the ram and pounds per square inch of its area. The sliding head *d* moves on a track, and is held in position by steel keys. The force pump is driven by a belt placed on the pulley *e*, and takes its water supply from a tank underneath, to which the water is returned.

72. Portable Press.—For work that is too large to be placed in such a machine, a portable form may be used that can be taken to the work and can be made to conform to its varying conditions. If the portable press is near the stationary press, it may be operated by connecting it to the power-driven pump of the latter; it may also be connected to the hydraulic service pipe in shops provided with a

hydraulic service. If the necessary hydraulic pressure cannot be obtained in either one of these ways, the press may be operated by a hand force pump.

73. All shops have more or less work that requires to be driven or pressed together; for instance, large mandrels which must be put in and taken out. These operations, which often require the help of several men, may be easily and quickly done by the aid of a small portable press like

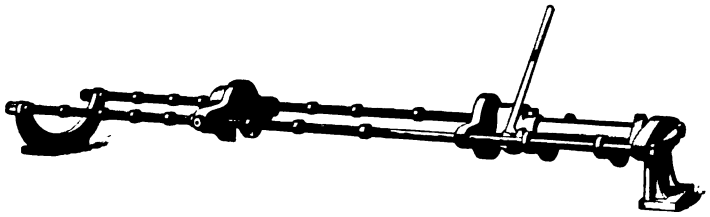

FIG. 21.

that illustrated in Fig. 21. This press, as can be seen by referring to the illustration, has two bars 1½ or 2 inches in diameter that are threaded for two-thirds of their length on one end and enough on the other to take a nut. Nuts are screwed on at intervals to form stops for the movable head, and two supports are provided for a hydraulic jack. This tool may be made to suit the needs of the shop in which it is to be used, and any ordinary shop jack, not exceeding in power the strength of the side rods, may be used with this device.

74. Press Fits.—Press fits may be classed under two heads: *taper fits* and *straight fits*. If a standard 1-inch cylindrical plug-and-ring gauge be tried together when they are at equal temperatures, it will be found that the plug can only be pushed through the ring by exerting considerable force. The reason for this is that the size of each gauge is so near that of the other as to make the fit almost perfect. If a person will hold the ring in his hand for 5 minutes, the ring will become larger, and he will find that he can push the plug through it easily; and if he will dip the plug into

cold water and warm the ring, the difference in size becomes so great that the plug will fall through. From this experiment it is seen that the pressure required to press two parts together depends on the difference in their size.

In a press fit, the internal piece, as a shaft, for instance, must be enough larger than the hole to insure the development of enough friction between the two pieces to hold it there securely when pressed home. The amount of friction is judged by the total pressure in tons on the piston of the hydraulic press that is required to press the pieces together. The allowance that has to be made, i. e., the difference in the diameter of the two pieces that is required in order to insure a pressing together at a given pressure, cannot be calculated with any degree of accuracy, as the pressure depends on a number of variable factors whose values cannot be determined, even approximately. Some of these factors are the length of the hole compared with its diameter, the relative smoothness and truth of the two surfaces that are to be joined, the amount of metal and the manner of its distribution around the hole of the external piece, and the character of the material. For this reason, experience, judgment, and experiment must be relied on; in order to aid the judgment, several cases taken from actual practice are here given.

75. In one instance, a car-wheel seat $4\frac{7}{8}$ inches in diameter and 7 inches long required 30 tons to force it into the axle, an allowance of .007 inch having been made. In another case, two crankpins were required to go in holes 5 in. × 8 in. at 50 tons pressure. A gauge was made to the diameter of the holes, and another one was made .003 inch larger. The pins were turned to the size of the larger gauge, and went home at a pressure of 45 and 48 tons. It is the practice of one company to bore the hole of car wheels $4\frac{1}{8}$ inches in diameter, making the hole cylindrical, and to turn the axle a little tapered, just enough to be discernible to the calipers, probably .003 to .005 inch; the holes being 5 inches long, the wheels go home under a pressure of

30 tons. It is clear that where such a great pressure is required to force the pieces together, there must be considerable wear on the surface of both parts as they are being pressed together; hence, it is customary, instead of turning the internal piece cylindrical, to turn it with a taper of $\frac{1}{1000}$ of an inch to the inch of length of the hole to be fitted. If the hole is very long, less allowance may be made.

76. Taper Press Fits.—For many purposes, the taper fit is preferable to the straight fit. In a taper fit, the hole is bored tapered, generally $\frac{1}{16}$ inch per foot, and the internal piece is turned to the same taper as the hole, or in the practice of some, an increase of $\frac{1}{1000}$ of an inch to the inch of length is allowed; that is, if the large end of a hole 20 inches long measures 15 inches, the large end of the internal piece would be made 15.020 inches in diameter. If the hole is very long, the amount allowed may be made less.

77. Taper-pressed fits are sometimes made in the following manner: The hole in a hub, wheel, or crank is first bored with a taper of, say, $\frac{1}{16}$ inch per foot. A hollow cast-iron plug is then turned or ground to correspond to the hole and used as a sort of cylindrical surface plate to which the inside of the hole is scraped until it is true and round. The pin or shaft is then accurately fitted to go in to within a certain distance of its final location, generally to within from 1 to 4 inches. The following illustration, taken from actual practice, serves to illustrate the manner of fitting up this class of work.

An engine shaft 22 inches in diameter carried a hub for its flywheel that had a bore 30 inches long. The hole in the hub was scraped so that the hub would slide to within $4\frac{1}{4}$ inches of its location, and was pressed in the remaining distance. The hole in the crank was bored $18\frac{3}{4}$ inches and was 14 inches long; it was fitted to go within $3\frac{1}{2}$ inches of the shoulder of the shaft and was then pressed home. The crankpin had a bearing $9\frac{3}{4}$ inches in diameter by 11 inches long and was pressed $2\frac{1}{8}$ inches. In all these cases the shaft or pin had a taper of $\frac{1}{16}$ inch per foot.

78. Precautions. — Tables have been made by the formulas proposed for this class of work by various engineers, but they are of little value in general practice, since only experience will give results that are satisfactory. However, each shop can, to advantage, make useful tables from obtainable data and their own experience. It is better to allow a little too much in making a forced fit than too little, for if the internal piece is too tight, it may be pressed out again and may then be draw-filed to a smaller size.

Before putting the two parts together, they should be thoroughly lubricated with a heavy oil or grease, to prevent cutting, which might destroy the entire fit on both pieces. White lead it often used instead of oil.

79. Allowances for Different Fits.—The amount allowed on various kinds of work for fits, such as running fits, easy driving fits, tight driving fits, and force fits, are shown in a general way in the following tables, which represent the practice of several good shops and may be taken as a general average of allowances made. Varying conditions, however, may call for different allowances, and, hence, the allowances here given must be modified to suit the requirements of the work. Running fits for work less than 1 inch in diameter may be made by making the internal piece .0015 to .002 inch under the size of the hole, while a 2½-inch shaft may be as much as .003 under size. Driving fits are spoken of as tight and easy. A good tight driving fit is described as one-half, and a light driving fit as one-quarter, of the force fit.

80. The following table of diameters and allowances for force fits represents the average allowance made in several good shops; but, as has been said before, the conditions prevailing in the work being done govern the amount of force necessary to force two pieces together. For this reason the pressure necessary to push the parts together is seldom given with a table of allowances.

TABLE I.

FORCE-FIT ALLOWANCES.

Diameter. Inches.	Allowance. Inch.	Diameter. Inches.	Allowance. Inch.
½	.001	12	.012
1	.002	14	.014
1½	.003	16	.015
2	.004	18	.016
2½	.005	20	.018
3	.0055	22	.019
4	.007	24	.020
5	.008	26	.022
6	.009	28	.023
8	.010	30	.024
10	.011	32	.025

81. Shrink Fits.—In the absence of a press the shrinking process is often resorted to, but in general it is not as safe or satisfactory. In this process the internal piece is made larger than the hole it is to go into, and the external piece is then expanded by heat to allow the internal piece to be easily slipped in.

The amount to allow for a shrink fit is largely a matter of judgment, in which the material and the construction of the article must be taken into consideration. Krupp allows .01 inch to the foot of diameter in shrinking on locomotive tires, while American builders allow a little more, .012 inch in 1 foot being common practice. Care should be taken not to allow too much, since either the external piece will pull itself apart or the internal piece will be crushed or distorted.

The following table of sizes and allowances, adopted by the American Railway Master Mechanics' Association, gives the amount allowed in several American shops for shrinking tires on car wheels.

TABLE II.

SHRINK-FIT ALLOWANCE.

Diameter. Inches.	Allowance. Inches.	Diameter. Inches.	Allowance. Inches.
38	.040	56	.060
44	.047	62	.066
50	.053	66	.070

82. Examples of Shrinking.—It is often necessary to shrink a crankpin in, which may be done in the following manner. The pin is turned to the required size and the crank is then heated hot enough to allow the pin to enter freely. Care must be taken at this stage of the proceedings to guard against the pin sticking in the hole before it is clear in. A heavy sledge should be provided on both sides, as the pin may require a little driving to carry it clear home. If the crank should cool too rapidly, the pin must be backed out with the greatest possible promptness. When once in place, the pin should be kept as cool as possible by applying waste soaked in cold water, or by keeping a stream of cold water flowing on the pin. Care must be taken not to let the pin get as hot as the crank, or the pin may expand the hole and the fit will then not be as tight as was intended.

83. Shrinking a crank on a shaft is a job that is required to be done quickly. The shaft should be blocked up at a convenient distance from the floor, with the key seat up. The crank should be heated until the bore shows sufficient expansion to go on the shaft easily. If the crank is heavy, it should be picked up by a crane in such a position that the key seat will be on top, to conform to that in the shaft. All dust or dirt should be carefully brushed from the crank, which should be quickly shoved up to the shoulder on the shaft, and a temporary key, fitting sidewise, should

then be lightly driven in to keep the key seat in line. Means should be provided for holding the crank against the shoulder, or it may slip back and grip the shaft so tight that it can never be brought up into its correct position. The permanent key may be fitted after the crank is cooled off.

84. A Special Heater.—A very convenient burner for heating parts in making shrink fits is shown in Fig. 22. A locomotive piston *a* is clamped between two wooden pieces, as shown in the illustration, and a gas burner *b*, which embodies the principle of the Bunsen burner, is supported centrally in the piston-rod hole. The burner has a number of holes on its circumference producing as many jets of flame, which strike the surface to be heated. An ordinary rubber gas tube *c* connects the burner with a gas pipe on the wall.

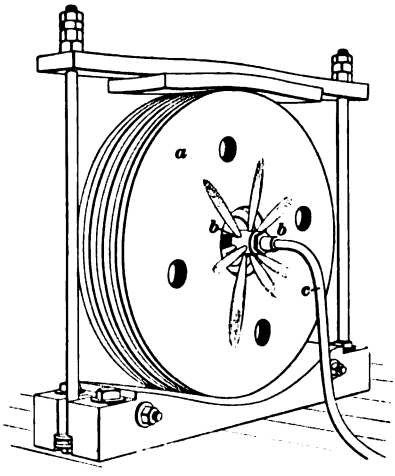

FIG. 22.

HOISTS AND CRANES.

HOISTS.

85. General Consideration.—It frequently occurs that the heavy parts of machinery, and often the whole machine itself, must be moved. This work, if it is done without proper appliances, requires the help of many persons, and in that case becomes very expensive with an increase of the size and weight of the parts to be moved. Light machine

parts may require no special appliances for hoisting, or at the most only an ordinary chain block.

86. Block and Tackle.—For some classes of work, and especially for erecting in the field, an ordinary block and tackle like the one shown in Fig. 23 is very useful. One advantage the block and tackle possesses is that it is generally possible to lift a weight to a greater height than with the chain block, since a longer rope can easily be reeved in and is more readily obtained than a chain.

Small blocks and tackles with $\frac{1}{2}$- or $\frac{5}{8}$-inch rope are often called **handy tackles.** The handy tackle is especially useful for drawing a weight suspended from a larger tackle to one side, or for moving machinery supported on rollers.

FIG 23.

87. Care should be taken to see that the tackle is always placed in its most advantageous position for hoisting or pulling. For hoisting with the tackle shown in Fig. 23, the hook *a* should be attached to some fixed support above and the hook *b* should be made fast to the work. In this case a given amount of pull on the rope *c* will cause an equal pull on the other ropes *d*, *e*, and *f*, so that, neglecting friction, a given pull on *c* can lift three times the load on the hook *b*. For dragging weights horizontally, the hook *b* should be attached to the stationary object and the hook *a* should be made fast to the moving load, the rope *c* being then pulled in the general direction of the tackle. This has the advantage of giving four ropes pulling on the block *g* and hence on the hook *a*.

88. Chain Blocks.—A great variety of chain blocks are used in the machine shop, of which the most common type,

known as the **differential chain block,** is illustrated in Fig. 24. A chain *a* passes over a differential pulley *b*, and about a single-chain pulley *c* at the bottom. A hook is attached to each pulley, the upper one *d* being used to support the block from the ceiling, or overhead part, and the lower one *e* for the purpose of taking hold of the part to be raised. The differential pulley *b* is provided with two chain grooves, the diameter of one being greater than the diameter of the other. As the chain is drawn over the pulley so that the latter revolves, a greater length of chain per revolution will travel over the groove with the larger diameter than over the one with the small diameter. This being true, it will be seen that when the side of the loose loop *a*, which is on the large diameter, is drawn down, it will shorten the distance between the two pulleys and lengthen the loose loop. By drawing down on the other side of the chain that runs over the small diameter, the distance between the pulleys is increased. A weight hanging upon the hook *e* will be raised or lowered according to which side of the loop is pulled. Other forms of chain blocks, in which the reduction is obtained with worms and worm-gears, or by means of spur gears, are also used quite extensively.

FIG. 24.

89. Pneumatic Hoists.—Shops provided with a compressed-air plant use the air for many purposes. It is particularly useful in serving work to the machine tools, vise, bench, laying-out table, etc. The principal features of this hoist, which are shown in Fig. 25, are a cylinder *c*, in which slides a piston

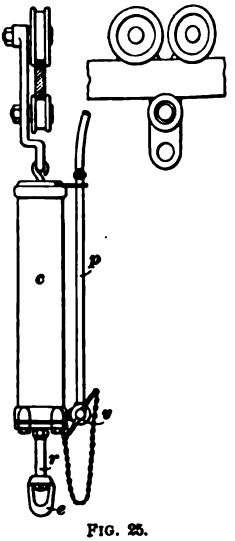

FIG. 25.

having a rod that is supplied with an eye e at its lower end. The air pipe is connected to the air-pipe line by a hose, and air is admitted to the cylinder by the three-way cock r, which is operated by the chain in order to raise the weight that is attached to the eye. The hoist will lift the length of its piston travel and will travel on its runway as far as the hose will permit.

CRANES.

90. Jib Crane.—Limited areas, and often one or two machine tools, are served by jib cranes, one form of which

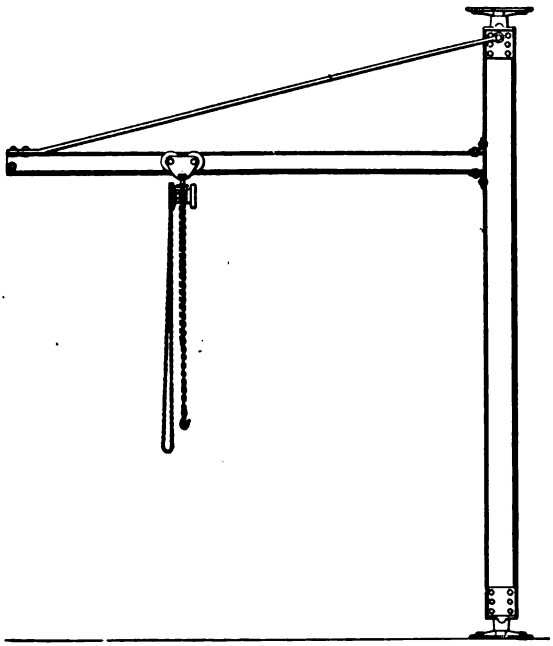

FIG. 26.

is shown in Fig. 26. Heavy cranes of this type, capable of lifting 30 tons, are in use in some shops, although for such heavy work the traveling crane is generally preferable.

91. Trolley System.—The traveling hoist furnishes an extremely useful and convenient method of handling

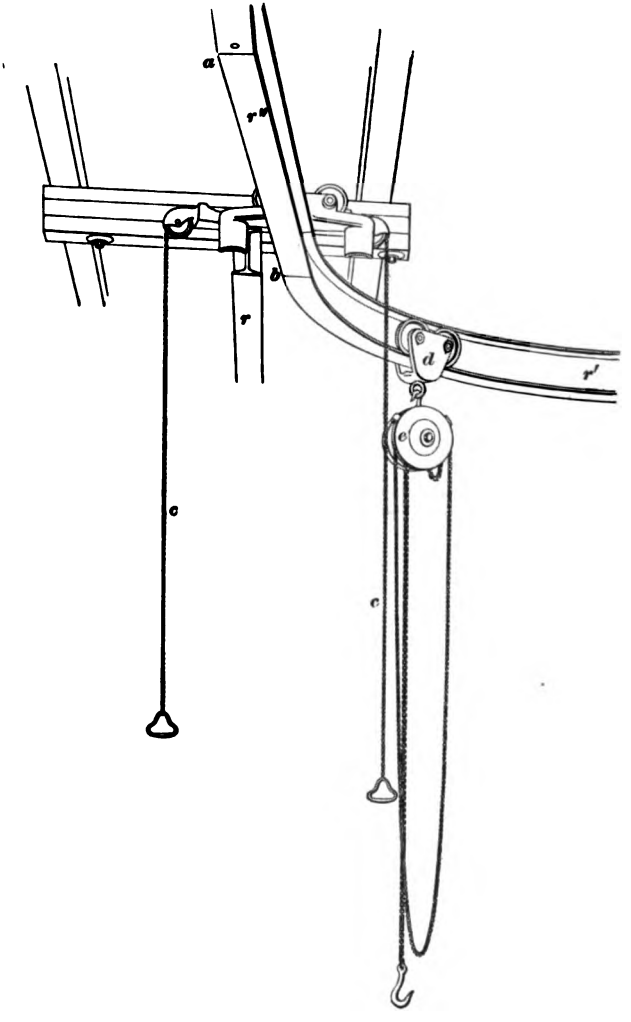

FIG. 27.

light and medium-heavy work, and it is especially adapted to shops having low ceilings in which the traveling crane

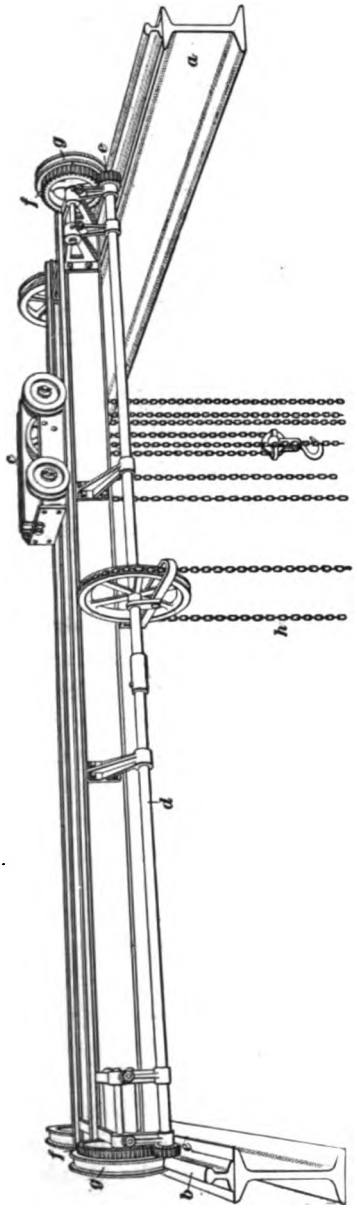

FIG. 28.

cannot be used. The runway or track used in this system of shop transportation consists of **I** beams suspended from overhead, as shown in Fig. 27.

The illustration shows how the traveler *d* may be switched from the main track *r* to a side track *r'*. A section *r''* of the main track is hinged at *a*, and its free end can be swung in line with the main track or side track by pulling one of the chains *c*, *c*. The hoist *e* is attached to the traveler.

92. Hand Traveling Crane.—The traveling crane furnishes the most modern and convenient means of shop transportation. Cranes of this kind are operated by hand, by power-driven shafting, or by electric motors.

The traveling crane is a bridge-like structure, spanning the floor and supported on steel rails placed on suitable supports, as is shown in Fig. 28. This crane has a capacity of from 2 to 6 tons and is operated by hand. It is built for spans

of 30 feet and under. I beams *a* carry the rails *b* on which the crane runs. In the case of heavy cranes, these I beams are replaced by built-up girders. These runways are placed as high up in the building as possible in order to get as much room under the crane as can be had. The runway extends the whole length of the floor or building and a trolley *c* running on rails can travel from one end of the bridge to the other, and hence can be brought over any desired point on the floor. Hand cranes like the one illustrated are operated from the floor in the following manner. A shaft *d* has a pinion *e* on each end that meshes with the gears *f*, *f*; they are keyed to the same shafts to which the wheels *g*, *g* are fastened. The shaft *d* is rotated by pulling the chain *h*, and the crane is thus traversed lengthwise of the building. A similar mechanism runs the trolley from one end of the bridge to the other. The hoisting is done from the floor and provision is made for several men to work the hoist for heavy loads.

93. Power Traveling Crane. — The power-driven and electrically driven traveling cranes have the same general movements as are found in the hand crane just described, but as they are intended for heavy work they are built heavier than the hand cranes. The power-driven crane is usually operated by means of a square shaft placed just below the bridge and close to the runway girder. This shaft is carried in boxes at each end, and, passing through a sleeve that is attached to the crane, it transmits its motion to the various trains of gearing that operate the different traverses and hoists. The great length and weight of the square shaft makes it necessary to furnish more support than is afforded by the boxes and the sleeve. The additional support is given in the following manner. The shaft is made in sections, with cylindrical bearings turned at regular intervals for the supports, which are placed under it. These supports automatically drop down out of the way as the crane comes to them and return to their place when the machine has passed along. The square shafts are made in as long

sections as can be shipped, and are welded together in the shop where they are to run and then hoisted into position.

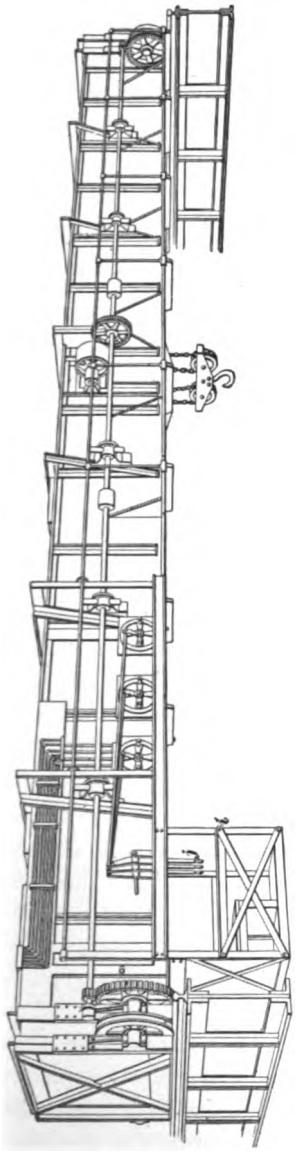

FIG. 29.

94. Electric Traveling Crane.—The electrically driven crane may be driven by a single motor and the separate parts may be run by trains of gearing, but more generally it has a separate motor for each movement. Many such cranes that are intended for heavy work have an auxiliary hoist in order to allow light work to be handled much quicker than can be done with the main hoist.

The current for operating these cranes is taken from wires run along the sides of the building just above the bridge. The operator is carried in a cage *i*, Fig. 29, suspended below and to one side of the bridge, where he controls the various movements by means of levers, switches, or other devices shown at *j*.

95. The crane illustrated in Fig. 29 is electrically driven, and has a capacity of 10 tons, with a span of 54 feet; the same general manner of construction is followed by its builders in the construction of similar cranes that will lift as much as 150 tons.

ERECTION OF A LATHE.

96. Systems.—The details entering into the erection of lathes are so varied, owing to their difference in size and design, that no general system is, or can be, followed. Some makers first plane the grooves in the headstocks and tailstocks to a gauge and then bore the boxes of the headstock and the hole for the tailstock spindle, while others reverse the operation, first boring the boxes and the tailstock-spindle hole and then planing the grooves in the bottom of the headstock and tailstock. Both systems, or modifications of either, are frequently used in the same shop; the second system is generally used on small lathes from about 18 inches swing down, while the larger lathes are usually finished in accordance with the first system.

THE LATHE BED.

97. Seasoning.—It is considered good practice to cast the beds several weeks before they are needed, and, after roughing them top and bottom, to allow them to lie for several weeks so that the casting strains may become equalized. Later on they may be put on the planer and the finishing cuts taken.

98. Machining. — Lathe beds are generally planed to gauges that give the size and form of the V's, and the width of the bed. The outside edges of the bed and the flat top between the ways should be filed and polished as soon after the planing as possible, on account of the fact that they can be finished much easier and in less time than after they have been exposed to the air of the shop, since the file takes hold much better when the bed is fresh from the planer than after the surfaces have become slightly rusted. Some persons claim that the reason a file will not take hold of the surface of a casting that has stood some time after planing is that the surface becomes covered with a thin coating of grease which is carried in the air of the shop.

99. Testing. — The ways are usually tested by a straightedge and then scraped, or, if necessary, they are filed and scraped. However, one of the best shops, in which small lathes are made in lots of 25 to 100 at a time, uses a special surface plate made as shown in Fig. 30 for each size of lathe. This surface plate has been fitted up with great care so that both the top and bottom ways *a* and *b* match each other; it

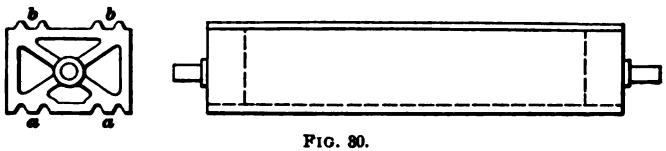

FIG. 30.

has a trunnion at each end and can be lifted by a bale attached to a chain block or air lift. The trunnions permit the plate to be turned with ease, either side up. The ways on the lathe bed are scraped to fit the grooves *a*, *a*, and the headstock, tailstock, and saddle are scraped to fit the ways *b*, *b*. The saddle is sometimes scraped to the ways on the bed.

HEADSTOCK AND TAILSTOCK.

100. Machining.—The headstocks and tailstocks of small lathes are frequently made ready for the boxes and caps by milling, while the larger sizes are planed, machining them if possible by the gang system; that is, a large number are put on the planer table in line, and all are machined together. Jigs are usually provided for holding the pieces on the milling machine, and may also be employed on the smaller sizes when the work is done on the planer. The legs are fitted and bolted to the bed at any convenient time, but it is generally done before the ways on the bed are scraped.

101. Fitting.—The machined castings for the headstocks and tailstocks are next sent to the fitter; the boxes and caps are then fitted to the headstocks and the tops and bases of the tailstocks are fitted to each other.

102. Boring.—Two systems of boring are followed. In the first, used principally in the case of small lathes, the boring is done first, and a closely fitting arbor is placed in the bored holes in order to aline the headstock and tailstock while the V's are being planed. In the other system, the V's are planed and fitted to the ways on the bed, and a special fixture carrying a boring bar exactly parallel with the ways is used to bore both the headstock and the tailstock in position. In the first system, the small sizes of headstocks and footstocks are generally held in jigs; the boring bars run in hardened-steel bushings, and are turned by any convenient drilling or boring machine. When the work is done in this way, the boring bar is connected with the spindle by a universal joint. After the boring is done and the V's are planed, the work of erecting actually begins.

ERECTION AND INSPECTION.

103. Erection.—The details of the process of erecting vary somewhat in different shops, but while different tools and methods are used, the general method of procedure is essentially as follows: The bed, with the legs attached, is placed in position on the floor and leveled until it is out of wind. The V's or ways having been tested, and the headstock and tailstock having been scraped to fit the V's, the two stocks are alined.

So-called proof bars, which are marked *a* in Figs. 31 and 32, are carefully prepared, and are made to fit the boxes of the headstock and the bore of the tailstock. The ends *b*, *b* of the proof bars are turned and then ground to exactly the same diameter in order to allow the measurements for alinement to be taken from them. A temporary saddle *c*, which has a groove fitting one of the V's of the bed, and which carries a slide *d* to which an upright arm *e* is fastened, is one of the means by which the alinement is tested. The headstock and tailstock with the proof bars in them having been placed on the bed at some distance from the ends, the temporary saddle is placed near one end of the proof bars

and the slide *d* is adjusted until a feeling piece, say, for instance, the steel rule *f*, shown in Fig. 32, will just go in

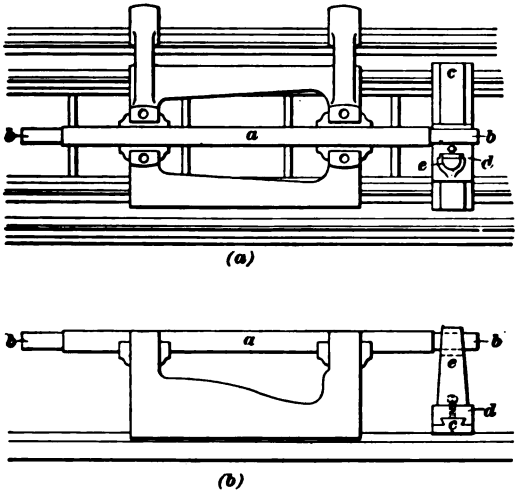

FIG. 31.

the upright *e* and the end *b* of the proof bar. The saddle is now shifted successively to the three other ends of the proof between bars without disturbing the position of the upright, and the manner in which the feeling piece goes in shows whether the headstock and tailstock are in perfect alinement in a horizontal plane. If this is not the case, the grooves in the headstock or the tailstock, or in both of them, are filed and scraped until the horizontal alinement is perfect.

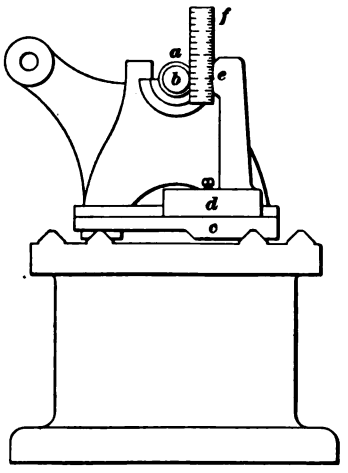

FIG. 32.

104. To test the vertical alinement, a jack *g*, Fig. 33, is placed on top of the parallel *c* and its adjusting screw is

raised until it will just touch one end of the proof bars. The parallel is then shifted to the other ends of the proof bars

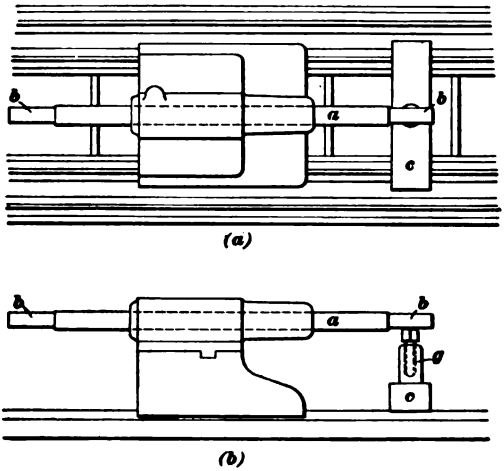

FIG. 33.

and these are tested; the manner in which the jack goes under the proof bar determines which way, if at all, either spindle is out of line.

105. The method of testing the alinement just described tests the alinement of the headstock and tailstock spindles in respect to each other, and at the same time tests their parallelism to the ways, i. e., to the line of motion. If considered desirable, a sensitive indicator or a micrometer feeling piece may be used instead of a rigid feeling piece, determining from their reading which way, if at all, either end of either proof bar is out of alinement.

106. The headstock and tailstock having been alined, the saddle is placed on its V's and a round test piece *a*, Fig. 34, is placed against the slide *b*. This test piece is ground perfectly cylindrical and is made long enough to project several inches beyond the sides of the saddle. An arm *c* is now fastened to the proof bar, and the screw *d* is brought up to the bar *a* on one side of the bed. The proof bar is then rotated to the opposite side into the position

shown by the dotted lines; if the screw *d* does not show the saddle to be square, the slide *b* must be brought square with the spindle by scraping the V's in the saddle. The saddle is

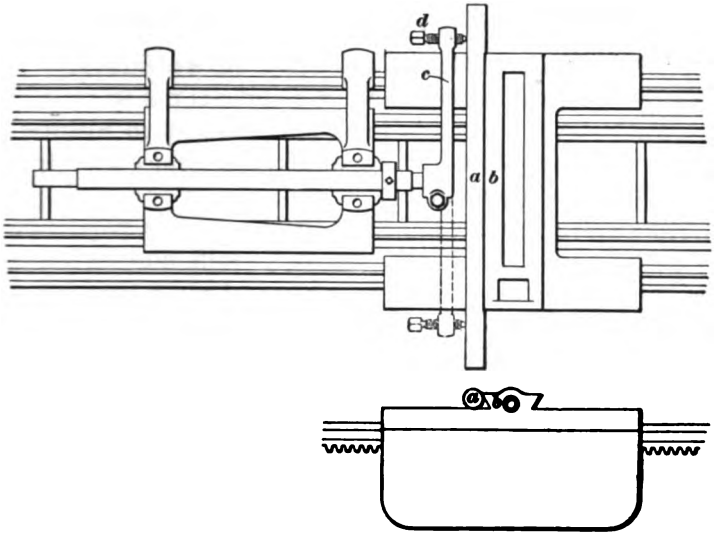

FIG. 34.

tested by tramming in this manner, and is shifted until it shows perfectly square with the spindle; the lathe will then be alined to bore straight and to face square.

107. After the headstock, tailstock, and saddle are fitted, the spindle, set-over screws, and anchor are added to the tailstock, and the spindle, back gear, feed mechanism, and feed-reversing mechanisms are placed in position on the headstock. The apron is next clamped to the saddle and is tested for alinement by using a proof bar passed through the bearings for either the leadscrew or feed-rod. The measurements for alinement are taken from the bar to the edge of the bed and to the top. If the apron is not in line, it is brought into alinement by filing the top and back. It may now be screwed in position, and the boxes for carrying the leadscrew and the feed-rod, if one is used, are placed on special bearings provided on the ends of the apron proof

bar, and are then marked to the pads previously planed for them on the bed. These boxes are next planed to go in their places and are then fastened to the bed. The feed-rod, the leadscrew, and the remainder of the feed mechanism and screw-cutting mechanism are put in place.

108. Taper Holes in Headstock Spindles. — The taper hole for the center of a live spindle is put in by different methods; its truth is in some instances so intimately connected with the assembling or erection that a description of one process is given here.

Some makers prefer to rough out the spindle, particularly if it is a small one, and then to drill, ream, and hand-ream the hole, after which the spindle is centered by the hole and trued outside, a plug having been fitted to the taper hole.

109. Another method that has many advantages is used extensively for large spindles. The spindle is centered and a steady rest seat is turned on both ends, if it is to be a hollow spindle; the hole is then put through. Plugs are driven into both ends if the hole is larger than an ordinary lathe center, and the spindle is finished with the exception of the face-plate thread and the taper hole. The assembler or erector puts the unfinished spindle into its place, and if a large number of headstocks are to be finished, he puts them successively on a lathe bed made for the purpose and provided with a taper attachment, and bores the taper hole true, smoothing it with a hand reamer. He completes the work by cutting the thread to fit the face plate. In large lathes that are not built in large quantities, the headstock is mounted on its own bed for boring the taper hole in the spindle and for cutting the thread; a compound rest is used for boring the hole in case the lathe has no taper attachment.

The process in which the spindle is finished in its own bearings has the important advantage that with reasonable care and skill on the part of the erector, the taper hole and the thread will be concentric with the bearings of the spindle.

110. Inspection.—All machines are more or less defective, as it is practically impossible to make anything absolutely perfect. Knowing this, the builder establishes a

limit within which the error will not materially affect the working of the machine, and furnishes the inspector with a list of such defects and their limit, with instructions not to allow a machine to pass until the errors have been brought within the allowable limits.

111. The principal features of an inspection prior to shipment are here given and are followed by a specimen of an inspector's report.

The hole in the headstock spindle is tested for concentricity by means of a proof bar. This bar is ground tapering to fit the hole in the spindle and is cylindrical the remainder of its length. It may project a foot from the spindle for the smallest lathes and more, proportionately, for the larger ones. By revolving the spindle and applying the indicator to the bar at the mouth of the hole and again at the outer end, the amount of error is easily determined.

112. The alinement of both spindles in reference to each other may be tested by means of the pair of disks shown in Fig. 35, which are made with taper shanks *a*, *a* that fit the taper holes in both spindles. The disks *b*, *b* are ground to the same diameter and are faced as square as possible. They are placed one in each spindle; the tailstock is then moved up to the headstock and when the faces *c* of the disks are brought nearly in contact, the amount of error is shown by looking through both vertically and horizontally.

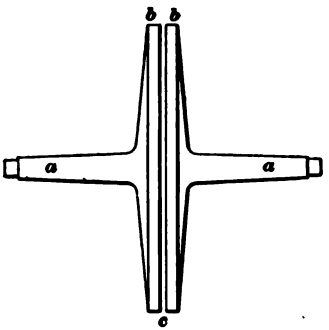

FIG. 35.

113. A pair of centers, having their ends beyond the taper, cylindrical and exactly to the same size, with the ends faced square, are sometimes used by the erector to determine if the spindles are in line. One is placed in each spindle and when the two are brought up end to end, show very closely if there is any error in alinement.

114. The leadscrew is particularly liable to error. This is tested for any deviation from the true pitch in lengths of 12 inches at different points along the screw. The gearing of all sorts is inspected and tested for alinement and smoothness of operation. The fits of all wearing surfaces are tested, as well as the fit of the various screws and binding and clamping fixtures. No part is neglected, and no defective material or faulty workmanship is allowed to pass.

115. The inspector is usually provided with a printed blank for reporting each lathe. The serial number is stamped on the lathe and this appears on the report, which is filed in the office for use should complaint be made or repairs ordered. Such a report is appended.

INSPECTOR'S REPORT.

16" × 6' Compound *Engine Lathe.*

Lot No. 1300 *Inspection No.* 1093

Spindle runs at mouth, $\frac{1}{1000}$

" " end of 12-inch bar, $\frac{1}{1000}$

" lines with ways, Ver. $\frac{1}{1000}$ Hor. $\frac{1}{1000}$

Tail Stock " " " " "

Test piece for boring 8 inches, shows large at front end } 0

Face Plate squares up concave, $\frac{1}{1000}$

Taper Attachment Slide Ways with Ways on Bed, }

Back Gears run, Good

Chuck runs,

Rest Binder Good

Lead Screw, per foot $\frac{1}{1000}$ long in one foot

Ordered by

Worcester, Mass., U. S. A., Sept 17 1900

J. S. L. Inspector.

PRENTICE BROS. COMPANY.

BENCH, VISE, AND FLOOR WORK.

(PART 4.)

MACHINE ERECTION.

PLANER ERECTION.

1. Systems of Planer Erection.—The problems involved in erecting the various styles of planers do not differ greatly. The essential points to be considered are that the system must be such as to quickly and cheaply assemble the parts so that they will all be in their proper relation to each other and that the alinement of the various parts will be perfect within the required limits. The erection of very small planers is much simpler than that of large planers, owing to the fact that there is little or no appreciable spring of their beds. In the case of these small planers it is possible to make the various parts as nearly perfect as can be by means of gauges and templets and then assemble the parts so that they are, to a greater or less extent, interchangeable. This system cannot be followed in the case of large planers, owing to the fact that the bed depends on the foundation for its support, it being, for economical reasons, impossible to make a casting large enough to insure perfect rigidity in the bed; hence, in the case of the larger sizes,

Copyright, 1901, by THE COLLIERY ENGINEER COMPANY.
Entered at Stationers' Hall, London.
All rights reserved

each planer must be treated by itself. The erection of a large planer involves all the points that have to be considered in the erection of a small planer and many more, and, hence, the erection of a planer of this class will be given in detail.

2. Classes of Planers.—For convenience of treatment, planers may be divided into three classes: *small*, *medium*, and *large*. The small planers include those that will plane up to 24 inches square, the medium size those that will plane from 26 to 40 inches square, and the large ones those that will plane sizes larger than 40 inches square. The first class are usually provided with but a single head for carrying the tool, the head being placed upon the cross-rail between the housings. Most of those in the second class also carry but a single head, though some of the large ones may be provided with two heads on the cross-rail and in rare cases with side heads on the uprights or housings. The large planers are all provided with two heads on the cross-rail and one head on each upright.

3. In the case of very large planers that plane 120 inches and upwards, provision is frequently made for handling work that will not pass between the housings at all. This is accomplished by placing a floor plate on one or both sides of the bed about half way between the front of the housings and the end of the bedplate. Upon this floor plate a post (or posts) is located, which is provided with vertical guides carrying one or more heads. These uprights can be moved toward or away from the planer bed, and the heads carrying the tools can be fed up or down the uprights. This provides for the planing of surfaces at right angles to the face of the table on very large work.

4. Precautions in Regard to Castings.—The castings for planer beds, tables, and uprights should be made of good close-grained iron. That for the tables should be of a soft but tough nature, so that its surface can be planed true at one setting of the tool, for if the casting were hard,

the wear of the tool would throw the surface appreciably out of true. In the case of very large planers, the beds and, sometimes, the tables are made in two or more pieces, and subsequently joined by means of bolts and dowel-pins. It is always best to season castings somewhat before using them. This is especially true in the case of small planers that are to be constructed on the interchangeable plan.

5. Precautions Necessary in Machining.—These beds, tables, and housings are planed to carefully tested gauges, and every angular surface is tested to make sure that the angle is correct. The work is also tested with a straightedge while on the machine to make sure that the planers are not working concave or convex. The greatest care is taken in planing these parts, as the slightest neglect on the part of the planer operator will result in much more work for the fitters.

Long beds and tables must have their joining ends planed perfectly square, after which they are bolted together as securely as possible with fitted bolts and dowels. All machine drilling and boring that can be done is finished and then the erecting proper begins.

MANNER OF ERECTING.

6. Supporting the Bed.—The bed *a*, Fig. 1, is supported on cast-iron parallel blocks *b* placed 6 or 8 feet apart along the whole length of the bed. Planed cast-iron wedges *c*, placed point to butt, are placed between the parallels and the bed, which make an adjustable parallel blocking.

A clamp jack *d* is placed under the bed at each side and may be removed if necessary while putting in the driving gearing. The arrangement of all the blocking under the uprights should be such that none of it will interfere with the driving and feed mechanism during erection, and as these details vary in different machines, the blocks must be arranged to suit each different machine.

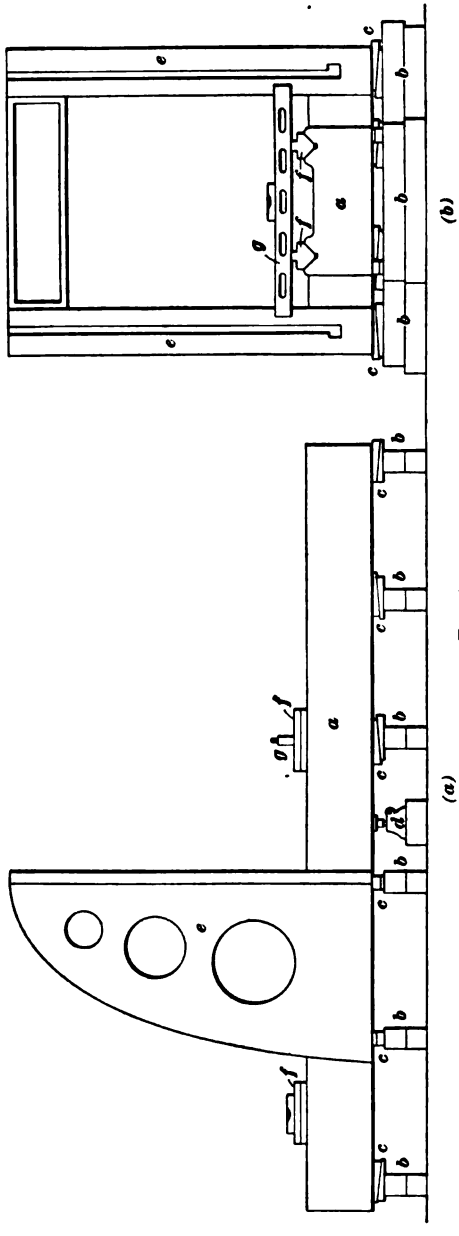

FIG. 1.

It is best to put the uprights *e* in their places on the bed before the leveling operation, as the addition of their weight is liable to throw the bed out of level again if they are placed in position after leveling the bed.

7. Leveling the Bed.—Several methods may be followed in leveling a planer bed, depending on the tools at hand, but the process here described will give very good results if the work is carefully done. The leveling is done as follows: A pair of V-shaped parallels *f*, about 3 feet long, are placed one in each of the ways or V's of the bed. These parallels have been scraped as nearly true as it is possible to make them, and they may have center lines upon them. A

sensitive level is used on the top, and one side of the bed is carefully leveled by moving this parallel, short distances at a time, over the entire length. The other parallel is used in a similar manner in the other **V**, and by placing a straightedge across both of the parallels and using the level on it, the work is leveled crosswise. The operation of first leveling one side and then cross-leveling to the other is repeated several times, or at least until no further errors can be detected.

8. Setting the Housings. — The housings are now tested and brought exactly plumb by placing a straightedge across the blocks lying in the **V**'s and using a large square upon the straightedge. In the case of large planers having a very heavy cross-rail and heads, some makers do not attempt to bring the housings exactly plumb upon their face, but allow them to lean back $\frac{5}{10000}$ inch for every foot in height, as the weight of the cross-rail and heads will bring the housings forwards somewhat, and experiment has shown that this allowance will about correct the error from this cause. The housings are squared both sidewise and in front, and the distance between them at the top and bottom is made equal.

9. In gauging this distance on a large planer, use may be made of a device similar to that illustrated in Fig. 2 (*a*), which consists of a wooden bar made of white pine or some other light wood, and fitted with screws at each end. The wooden bar should be $1\frac{1}{2}$ to 2 inches shorter than the distance between the housings, and the screws may be simply $2\frac{1}{2}$-inch wood screws with their heads filed off and the ends pointed and rounded, as shown in detail in Fig. 2 (*b*). The wooden stick may be tapered from the center toward both ends, and in the case

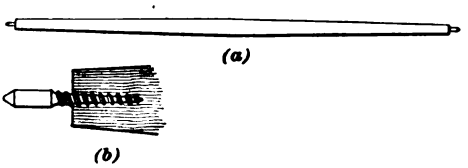

FIG. 2.

of a rod for measuring a distance of approximately 10 feet, the wooden strip would have to be about $1\frac{1}{2}$ in. $\times$ $2\frac{1}{2}$ in. in the center. The advantages of the wood are that it is lighter than metal and that it is not affected so much by expansion and contraction due to varying degrees of temperature. This distance between the housings on a large planer is not made any fixed distance, the only object being to make it the same at the top and the bottom, and, hence, this device becomes only a large inside caliper.

During the operation of setting the housings parallel, the gauge is set to the smallest distance, whether it be at the top or bottom, and is then transferred to the wider end, the amount it is necessary to move the housings being determined by introducing pieces of sheet metal or paper between the screw and the casting. By measuring these pieces with the micrometer, it is possible to tell just how much the housing must be moved.

After the housings are perpendicular and parallel, the girder or top rail is squared off to the length indicated by this gauge, and bolted in position. In the case of large planers, no attempt is made at interchangeability in this respect, but each top cross-rail is fitted to its individual planer.

10. Placing the Table and Driving Mechanism. The ways on both table and bed are fitted to a good bearing by scraping to surface plates. The driving mechanism is put in place. The table may then be put in place also, and any scraping necessary to true it to the ways is done, after which the thickness of the table rack is determined; the rack is planed to the required thickness and secured to the table.

11. Squaring the Cross-Rail.—The cross-rail must be set true to the V's in which the planer table slides. This may be accomplished as illustrated in Fig. 3. The table *a* is run back far enough to expose the V's under the cross-rail, after which two cylindrical pieces *b*, *b'* of exactly the

same diameter are introduced into the V's. A square nosed tool *c* is placed in the tool post and brought over one of the cylinders *b*. The tool is then adjusted until a feeling piece can just be moved between the cylinder and the tool. The tool is now run to the opposite side of the planer and tested over the other cylinder *b'*. If the tool does not bear the same relation to the second cylinder that it did to the first, it indicates that one side or the other of the cross-rail must be adjusted up or down. Various makers use different devices for accomplishing this. Some makers find that a sufficiently close adjustment can be obtained by moving one of the gears *k* or *k'* one tooth backwards or forwards so as to raise or lower one end of the cross-rail this amount. If a sufficiently close adjustment cannot be obtained in this way, they scrape a little off the hub of one of the gears *k* or *k'*. Other makers leave one of the pinions *m* or *m'* loose until the adjustment has been made, after which they key it in place; while still others leave one of the pinions, as *m'*, permanently attached by means of a setscrew, as shown at *n*, so that an adjustment can be made at any time.

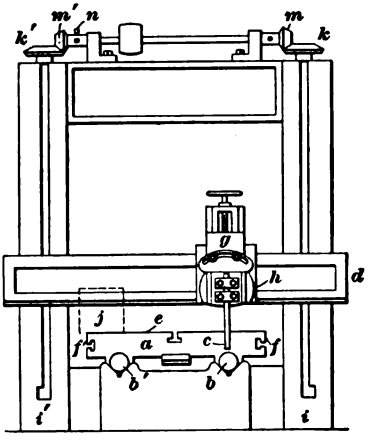

FIG. 8.

The cross-rail is moved up and down by two screws operated by the gears *k* and *k'*. The end of the rail that is found to be low is raised by adjusting the proper gear by one of the methods just mentioned. In the case illustrated, this can be accomplished by loosening the setscrew *n* and turning the gear the desired amount. By repeated trials the cross-rail is brought into such a position that the tool *c* will just hold the feeling piece on either one of the cylinders *b* or *b'*. In all these tests, care should be taken to always adjust the screws in the same direction. It is

always best to make the adjustments up on account of the fact that this will take up any lost motion or backlash between the nuts and the feed-screws in the uprights. For this reason it is always better to raise the low end of the rail rather than to lower the high end.

The feed mechanism and the mechanism for hoisting the rail, together with the oiling devices, are all put in place and tested, after which the machine is tested to see that it is within allowable limits of error.

After the cross-rail has been adjusted parallel to the V's, a light cut may be taken over the top of the table. The head *g* is then set vertical by the best square available. In the case of very large planers, the table is not trued in place by the manufacturer.

12. Preparation of Planer for Shipment.—Small and medium-sized planers are generally shipped with the principal parts in place and all bright parts coated with a slush of oil, or some other protective coating, to prevent rusting. The lighter and small parts are crated to prevent breakage and the whole mounted on skids for convenience in handling. Larger planers are taken apart, the smaller pieces being boxed and the fitted faces of the larger ones crated. All finished surfaces, in all cases, are slushed or given a protective coating before shipping. The smaller planers have their tables carefully trued in place before leaving the manufacturers, but the larger ones are usually shipped with the table just as it comes from the planer on which it was finished.

ERECTION OF PLANERS IN PLACE.

13. Large Planers.—In the case of all large planers, the beds of which rest on the foundation, the bed is placed on the foundation and leveled by means of wedges or jacks. The housings are bolted in place and the bed leveled by the process described in Art. **7.** The housings are also set

perpendicular to the bed. The cross-rail and its elevating mechanism are then placed in position.

The cross-rail may then be tested to see that it is parallel with the V's, as described in Art. **11.** The feed mechanism should be put in by other men while these operations have been going on, and after the cross-rail is adjusted parallel to the V's, the table should be tested. If it is found that the table is not parallel with the cross-rail, a light cut should be taken over it. After this is accomplished, the head *g*, Fig. 3, must be set to plane perpendicular. In the case of a large planer there will probably be two heads upon the cross-rail. They are both set as near perpendicular as possible by means of the best square available. After this, the sides *f*, *f* of the table may be trued down by means of tools set in the heads, and the angle at the edge of the table tested by a square. If this is found to be true, the mark *h* is placed on the saddle opposite the zero mark of the graduations on the head, as practically all planers are shipped from the factory with their heads graduated, but without the zero mark on the saddle being located.

If the planer is provided with side heads on the uprights *i* and *i'*, they may be tested by bolting a casting as indicated by the dotted lines at *j* to the face *e* of the table and then taking cuts from the sides of this casting by means of the side heads, the upper face of the casting having been trued by means of a tool in one of the heads on the cross-rail.

14. Securing Planer to the Foundation.—After all the tests have been gone through, and the planer is correctly adjusted in all respects, it may be secured to the foundation by ramming in any suitable cement between the bottom of the bed and the top of the foundation. After the cement is put in place, the planer should not be used until the cement has had sufficient time to harden. In cases where it is not possible to obtain a good permanent foundation, planers are sometimes left on wedges or jacks and leveled up frequently to keep them in line.

15. In erecting any planer, either in the shop or in the factory, it is well to test the bed lengthwise with a long straightedge to see whether or not it is planing hollow or crowning. This precaution is especially necessary in the case of very long planers.

16. Planers Having Legs.—Small and medium-sized planers are shipped from the factory with all their parts in place, and, hence, do not need as careful attention in erection as do the larger sizes, which have to be assembled on their foundations. It is usually sufficient to drive wedges under the legs until the table is level. The cross-rail is then tested to see that it is parallel to the top of the table, and if found so, no further adjustment need be made. If it is not parallel, the table should be run back, and the cross-rail set parallel to the V's as described in Art. **11.** After this, a light cut should be taken over the table and the heads set to plane vertically.

17. The amount of accuracy required in setting the heads, either on a large or small planer, depends very largely on the character of the work to be done on the machine. If the work will all be simply roughing and surfacing, the zero mark *h*, Fig. 3, may be placed accurately enough by adjusting the head to any available square and scribing or cutting the mark on the saddle; while if a large amount of angular work is to be done on the planer, it will be necessary to face down one or more castings to see that the mark is accurately located. Sometimes it is well to put on a provisional or temporary mark and then test each piece of work as it comes from the planer until sufficient information has been obtained to locate the mark accurately.

In the case of very small planers, the beds are usually stiff enough so that very little, if any, adjusting is necessary when setting them up, all the adjustment being made by the manufacturer; but even in this case it is well to go through the entire series of tests, if accurate work is to be required from the machine.

MILLING-MACHINE ERECTION.

18. Introduction.—There is a large class of machines in which the erection cannot all be done at one time, but must be carried on between the various operations in the

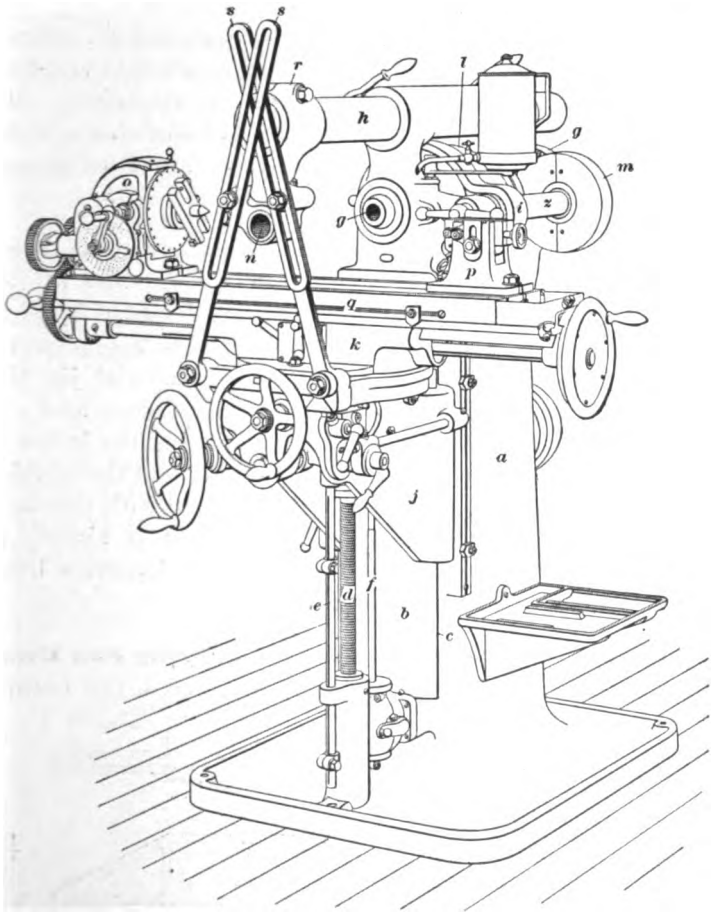

FIG. 4.

machine work. This is on account of the fact that some parts of the machine must be completed before other parts can be machined or fitted. This is especially true of very large

machines and of some comparatively simple machines in which a number of parts are interdependent. The milling machine as erected in at least one large shop forms a good example of this class of erection.

19. Planing the Column.—The column *a*, Fig. 4, is first fastened on a planer table with the face *b* up. Great care must be taken to see that the casting is not sprung by clamping. The face *b* and the inclined surfaces *c*, *c'* are carefully planed to a standard gauge. The general form of these parts is shown in Fig. 5.

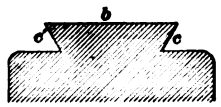

FIG. 5.

20. First Drilling Operation.—After the planing is complete, the frame is taken to a drill press and all the holes that do not require exact location drilled. This includes those for fastening the column to the floor, for the tool shelf, the tool-cupboard door, etc. A special jig that clamps on to the face *b* by means of the surfaces *c* and *c'* is used to guide drills and reamers for forming the holes for the elevating screw *d*, the knee stop-rod *e*, and the vertical feed-shaft *f*. This jig must not be confused with the large drilling and boring jig described later, but is simply an angle plate that is clamped to the face *b* and carries bushings for locating the holes mentioned.

21. Fitting the Surface for Carrying the Knee. After the first drilling operation is completed, the column

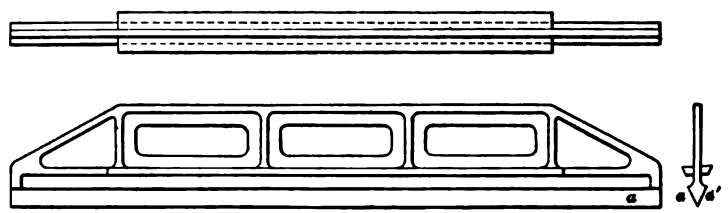

FIG. 6.

is laid on its back and the surface *b*, Fig. 4, scraped to a surface plate. After this, the angular surfaces *c* and *c'*,

Figs. 4 and 5, are scraped to a special surface plate or straightedge of the pattern shown in Fig. 6. The exact angle between the surfaces has to be determined by means of a gauge. The surfaces *a* and *a'* of the straightedge are scraped and fitted perfectly true.

22. Painting the Column. — After the scraping is complete, the surface of the casting is filled, rubbed down, and painted, all but the finishing coat being applied at this time. The finishing coat is not given until after the machine has been inspected.

23. Boring Operations on the Column. — After the scraping is completed, the column *a* is placed in the jig *b*, Fig. 7. The surface *b*, Fig. 4, rests upon a scraped surface in the jig, and the surfaces *c* and *c'*, Figs. 4 and 5, are brought in contact with the gibs in the jig, the fixed gib

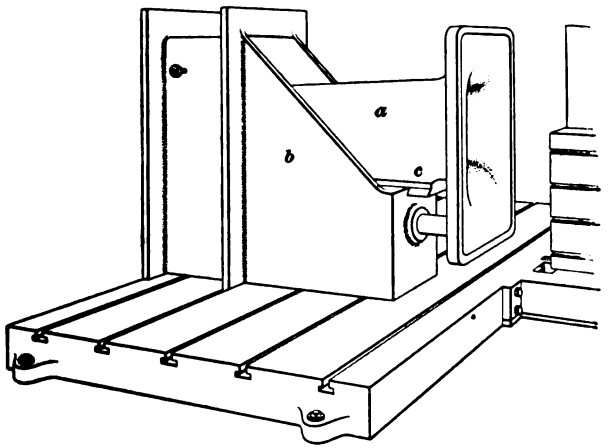

FIG. 7.

being shown at *c*, Fig. 7, and on the opposite side there is an adjustable gib that is held in position by means of set-screws. This secures the column in its proper relation to the jig, after which the holes for the spindle *g*, for the supporting arm *h*, and the back gear-shaft *z*, Fig. 4, are all

bored in their proper position. While these holes are being bored, the boring bar is supported at each end in hardened-steel bushings, and is driven by means of a floating driver carrying two universal couplings. This method of driving the boring bar prevents all danger of the spindle of the drill press springing the boring bar out of line with the bushings. The holes are both bored and reamed while the column is held in the jig. This method of procedure insures the holes mentioned being at right angles to the face *b*, Fig. 4, and hence in the proper relation to the table.

24. Fitting the Boxes.—After the holes for the spindle *g*, the supporting arm *h*, and the back gear shaft *x*, Fig. 4, have been bored and reamed, the column is removed from the jig and placed in an upright position on the floor. The boxes in which the spindle runs are then fitted into place by grinding.

25. Fitting the Knee.—The knee *j*, Fig. 4, is planed up and its upper face scraped to surface plates in a manner similar to that used in scraping the surfaces *b*, *c*, and *c'*, Figs. 4 and 5. The face that is to fit the upright of the column is also fitted and care must be taken to see that these two surfaces are at right angles to one another. After this the knee is fitted to the upright by scraping the upright face of the knee until the horizontal face comes square with the surface *b*, Fig. 4.

26. Fitting the Spindle.—The spindle that has been accurately ground with tapered bearings is now fitted into its place by scraping the boxes to bring the spindle true with the top of the knee. Care should be taken to see that the spindle is true in both the horizontal and vertical planes. The scraping also serves to give the spindle a good bearing in the boxes.

27. Fitting the Clamp Bed and Table.—After the knee and spindle have been fitted up, the clamp bed *k* and

the table *q*, Fig. 4, are fitted in place, each one being adjusted to the parts already in place. The index head *o* and tailstock center *p* are fitted up elsewhere and placed on the table after it has been accurately fitted.

28. Fitting the Overhanging Arm and Back Gears.—The overhanging arm *h* is fitted parallel with the spindle by scraping the holes in the casting through which it passes. The outboard bearing or support *r* is fitted to the arm *h* and the hole *n* drilled and reamed by means of tools in the spindle. This insures the hole in the outboard bearing being in line with the spindle. The diagonal braces *s* for the arm and all other minor details are fitted as opportunity offers.

29. Inspection of Milling Machine.—The machine now goes to the inspector, who carefully tests all parts and motions for accuracy, testing the knee at the highest and lowest positions and also the clamp bed at its inner and outer position and the table at both ends of its travel. A carefully ground steel testing bar, one end of which is ground to fit the tapered center hole of the spindle, is placed in the spindle, care being taken to see that both the hole and the test bar are clean before it is introduced. The parallel part of the bar projects from the spindle to the outer end of the knee. The spindle and the test bar are then revolved and the amount that the test bar runs out both at the spindle and at the outer end carefully noted by means of an indicator reading to thousandths of an inch. The test bar may also be used for measuring, by means of an indicator, to see that both ends of the table are the same distance from the spindle. The inspector is given a list of the allowable variations in the different parts of the machine and he must not pass a machine until all errors have been corrected so that the variation shall not exceed the allowable limit. In the case of a universal milling machine, the universal head and tailstock center are also tested. In testing the universal head, a test bar similar to the one used in testing the spindle is employed, in order to determine

No..... Universal Milling Machine.

Lot..... **Construction No**..... **Serial No**.....

Spindle runs at mouth,.....; end,.....
" with knee in Ver.....; Hor.....
" " frame in drop,.....; width,.....
" " overhanging arm,.....in.....inches.
" " center in O. H. arm, high.....; low.....
" " bushing in O. H. arm, high.....; low.....
" " surface of platen, length.....; width.....
Slot with ways of platen,.....
Spiral Head Spindle runs at mouth,.....; end,.....
" " " with slot,.....
" " " " center of slot,.....
" " " " back center in Hor.....;Ver.....
" " " " platen when at 90°,.....
" " " " main spindle when at 90°,.....
Eccentricity of swivel bed with main spindle,.....
Collet runs at mouth,.....; end,.....
Chuck runs out on { Main Spindle,..... / Spiral Head Spindle,.....
Vise out of parallel with platen in its width,.....
Back gears run,.....

Passed,.....190...by.....
BROWN & SHARPE MFG. CO. *Inspector.*

REMARKS:

.....
.....
.....

whether or not the spindle of the universal or spiral head runs true. The vise and chuck are also tested to see whether or not they are true.

30. Inspector's Report.—All the information obtained from the inspection should be entered on a report similar to the accompanying one. Each machine is given a serial number, and these reports are filed at the office so that in the case of any trouble arising, or any repairs being required for a given machine, an exact record of its condition when it left the shop is available.

ENGINE ERECTION.

31. General Consideration.—The first consideration in the erection of any engine is the size of the work and the means available for handling it. Most shops where medium or heavy work is done are provided with a traveling crane in the erecting shop with which all heavy parts are moved quickly and easily. This crane system has the advantage that it commands the whole of the erecting floor and has a sufficient height of lift to place the highest parts of any machine built in the shop in position. Where very high work is to be erected, it is sometimes necessary to set it in a pit, so that the highest parts will not come above the crane. This is especially true when erecting vertical engines.

32. The floor on which the erecting is done should be firm and solid, so that there is no danger of the work being thrown out of line by settling when heavy parts are added. Before beginning the work, the erecting floor should be cleared of all unnecessary obstructions and swept. The manner of erection is influenced very largely by the style of engine, as will be brought out in the description of the erection of the three principal types of horizontal, vertical, and locomotive engines.

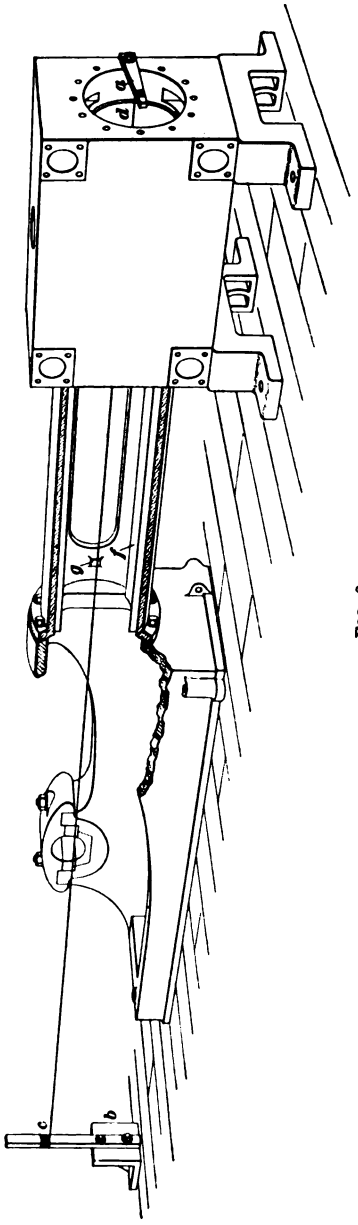

FIG. 8.

ERECTION OF A HORIZONTAL STATIONARY ENGINE.

33. Work Necessary on the Bed.—The bed of the engine is usually the first part brought to the erecting floor. It has already been machined as far as possible, including the boring of the main bearing, if this is cast with the bed, and the scraping of the guides. The guides are scraped to special surface plates, or in some cases to the crosshead itself, before the work is brought on to the erecting floor. The erection of a horizontal stationary engine is not influenced greatly by the type of engine, as the principal operations on both Corliss and slide-valve engines are similar.

34. Fitting the Main Bearing to the Bed.—In case the main bearing is cast separately from the bed and attached by bolts, it is necessary to bring it approximately square with the bed. This may be accomplished by placing a line through the crosshead guides and another one through the pillow-block and testing them

to see that they are at right angles. This method will only set the bearing approximately square with the bed, though it will usually set it so nearly square that any further adjustment can be made by scraping the shaft bearing. The bed with the pillow-block attached should be carefully leveled by means of leveling jacks or wedges.

35. Fitting the Cylinder to the Bed.—The cylinder is bolted to the bed or frame and a line or wire fastened to a piece of wood bolted to one of the studs in the end of the cylinder, as shown at *a*, Fig. 8. This line is carried through the cylinder, piston-rod stuffingbox, and guides, and fastened to the end of the frame in case the pillow-block is cast solid with the frame; or in the case of an engine in which the pillow-block is bolted to the frame, the line may be fastened to any suitable object, as, for instance, the angle plate and

FIG. 9.

stick shown at *b*, Fig. 8. The line should be set central with the bore of the cylinder at the back end by calipering from the inside of the cylinder to the line. This may be done with an inside adjustable gauge or micrometer, but in most cases it is better to use a light pine stick like that shown in Fig. 9. The stick *a* is tapered at each end and has pins *b* driven in at one or both ends. The advantages of the stick in calipering are that it is lighter than the inside micrometer and is not affected by expansion and contraction as much as a metal gauge would be.

The line must also be brought central with the stuffingbox at the other end of the cylinder. This may be done by means of a stick similar to that shown in Fig. 9, but it may be done more quickly by means of the device shown in Fig. 10. This consists of a hard-wood block *a*, which is turned to just fit the stuffingbox and has a $\frac{1}{4}$-inch hole *b* drilled in the center. The face of the

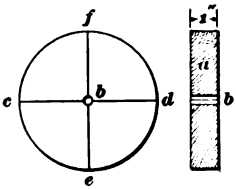

FIG. 10.

block is turned square with the outside, and two center lines *c d* and *e f* are drawn across the face at right angles to each other. By sighting along the lines *c d* and *e f*, it is easy to determine when the line or wire *c d*, Fig. 8, is central with the stuffingbox.

36. Lining the Guides to the Cylinder. — After this, the guides may be lined to the cylinder by measuring from the inside of the guides to the line at the top and bottom, as at *f*, Figs. 8 and 10, which will determine whether the line is central to the guides in a vertical plane. This test should be made at each end of the guides. In order to see whether or not the line is central horizontally, spots *g*, Fig. 8, are cast on the frame and faced off by the boring tool at the same time that the guides are bored.

37. Another and quicker method of lining the guides with the cylinder is to use special devices similar to that illustrated in Fig. 11. This consists of a casting *a* that is

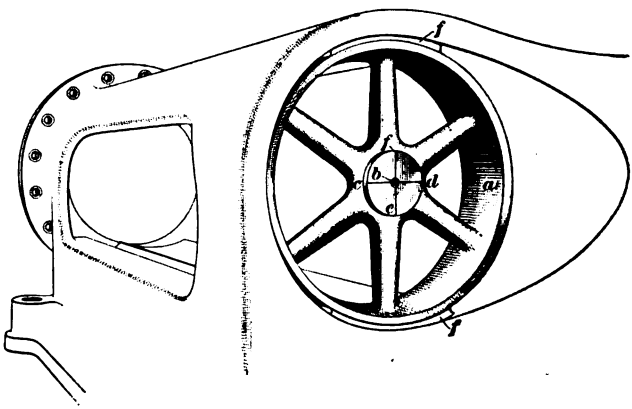

FIG. 11.

turned to fit the inside of the guides. At the center there is a small hole *b* through which the line passes, and the lines *c d* and *e f* drawn at right angles to each other serve to locate the center line in its proper position, this being done

in a manner similar to that described in Art. **35.** When the device shown in Fig. 11 is used, the spotting plates *g*, Fig. 8, are not necessary.

38. Bringing the Cylinder in Line With the Guides.—If it is found that the cylinder is not in line with the guides, it is necessary to fit the joint between the cylinder and guides so as to bring them in line. The amount of adjustment necessary may be determined by slacking off the nuts on one side and introducing pieces of sheet metal until the cylinder and guides are brought into exact alinement. After this an amount equal to the thickness of the metal introduced may be removed from the other side of the end of the cylinder or guides. Where this amount is very small, it is sometimes removed by filing or scraping; when it is greater, by machining.

It has been found practically impossible to machine parts so accurately that the cylinder of a large engine can be brought into line with the guides without fitting, and on this account many manufacturers place a loose ring or spacing piece between the cylinder and the guides, and, in the case of a tandem compound engine, between the high-pressure and low-pressure cylinders. After the amount of adjustment necessary has been determined, this distance piece is taken out and the proper amount removed from the high side. When this method is followed, care must be taken to mark the distance piece so that it cannot be placed in a wrong position. To insure this, it is well to have at least one of the stud or bolt holes uniting the parts not located according to the regular spacing system, so that it will be impossible to put the castings together in any but the correct position. This may also be accomplished by using guides or dowel-pins.

Many engine builders bore all their cylinders and guides in a vertical boring mill and so reduce the difficulty of fitting the parts, but in the case of a horizontal engine, the parts will spring out of round when placed in a horizontal position.

39. Fitting the Crank-Shaft. — After the cylinder and guides have been brought into perfect alinement, the crank-shaft must be fitted. The outboard bearing may be located by stretching a line through the shaft bearings at right angles to the lines through the cylinder and guides. This will serve to locate the outboard bearing very closely. After this has been done, the journals of the shaft should be wiped clean and given a coat of red or black marking material. The shaft should then be placed in its bearings with the lower half of the boxes in position, and given a few revoiutions. The shaft is then lifted out of the bearings and the high spots scraped off with a half-round scraper. This operation is repeated until the shaft shows a good bearing in both the main pillow-block and the outboard bearing. After the lower half of the boxes is scraped, the upper half of the boxes may be put in place and fitted in like manner. The shaft is then taken from the bearings and the cranks pressed or shrunk on and keyed. The eccentrics and governor-driving device are also placed in position, after which the shaft is returned to its place.

40. Testing the Crank-Shaft and Bearings.—In order to make sure that the crank-shaft is exactly at right angles to the center line of the engine, and that it is also

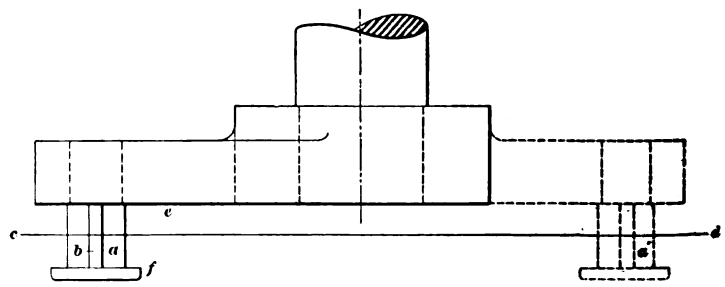

FIG. 12.

horizontal, the following course may be pursued. The crank-pin *a*, Fig. 12, is brought up to the center line *c d* and a piece of wood *b* is fitted between the face of the crank *e* and the head of the crankpin *f*. A mark is made on this piece of

wood in the middle and this mark should coincide with the line *c d*. If they do coincide, the shaft is square with the line. If they do not coincide, the outer end must be moved until they do. The shaft is now given a half revolution to bring the crankpin under the line at the other end of its travel, as shown by the dotted lines at *a'*. If the line on the stick *b* again coincides with the center line *e*, the shaft is at right angles to the center line of the engine.

41. In order to test the shaft to see whether it is level or not, a fine plumb-line may be hung vertically before the shaft and the crankpin *a* brought in contact with it at the upper portion of its revolution, and then tested again at the bottom of the revolution. If the crankpin just touches the line at both the top and the bottom, the shaft is horizontal.

42. Fitting the Reciprocating Parts.—After the engine is lined up and the shaft square and level, the reciprocating parts may be put in place. The piston, with its piston rod attached, is slipped into the cylinder and the crosshead into the end of the guides. The piston rod passes through the bushing in the head of the cylinder and is secured to the crosshead. These parts should be tested as they are put in place, to see that they line up properly. Some makers use a crosshead of such a pattern that the line *c d*, Fig. 8, may be carried through the crosshead and used in testing the crosshead to see that it lines up properly. After the crosshead and piston rod are in place, the connecting-rod may be put on. Before any of the surfaces that are to slide or move on one another are placed in contact, care should be taken to see that the bearing surfaces are well oiled. The oiling devices are put in place as fast as the parts are ready for them.

43. Fitting the Governor and Dashpots. — The control of the movements of the engine depends on the governor; consequently, great care should be taken to see that there is no danger whatever of the governor sticking or

failing to act. In order to insure this, the governor should be assembled separately and belted up so as to run at about its normal speed. The gears should be fitted so as to run as quietly and as smoothly as possible, and the dashpots, weights, and all parts properly adjusted during this preliminary run. It is usually best to run the governor one or two days in this way. After the governor has been fully adjusted, it may be taken down and placed on the engine. If the engine is a Corliss engine, the dashpots are responsible for the closing of the valves, and, hence, they should be assembled and tested before being placed on the engine. Shops building this class of engines usually have some device in which they can place a dashpot and run it for some time while adjusting it. After the dashpots are fully adjusted, they are placed on the engine.

44. Oiling Devices and Other Small Parts.—The oiling devices for the crankpin, eccentrics, crosshead, governor, and all other parts are put in place as fast as the parts are ready to receive them and they should all be tested before steam is let into the engine.

45. Fitting the Flywheel.—Flywheels for small engines are made solid and in halves. If the flywheel is made solid, it must be placed on the crank-shaft before this is lowered into the bearings. In some cases there is not room in the shop to put the flywheel in position, and, hence, the engine is assembled without the flywheel being placed on the shaft. Where it is possible, it is best to erect the flywheel with the engine. In erecting a large built-up flywheel, the hubs and hub flanges are placed on the shaft first. The arms and segments of the rim are then attached one at a time. By beginning the work on one side, the arms and sections of the rim may be attached to the hub flanges near the floor level, thus doing away with the necessity of raising them to any great height. After one arm and section of the rim are put in place, they may be lowered into the pit and the next one in order connected. This process may be continued until the wheel is completed.

46. Use of Dowel-Pins.—Whenever it is necessary to make the bed of an engine in sections, or whenever there are any parts that require accurate alinement, they should be doweled together. This is done by drilling holes through the pieces and reaming them out with a taper reamer after the work is erected. After the holes are drilled and reamed, taper pins are fitted to them. These pins are usually given a taper of from $\frac{3}{8}$ to $\frac{1}{4}$ inch per foot. As each part is put in place, it should be clearly and distinctly marked by letters, figures, and lines, so that it may be easily returned to its position when erecting in the field. If the work is complicated, it is well to keep a record of the marks used so as to avoid confusion in the final erecting.

47. Lagging.—When the cylinder attachments have all been put in place and the cylinder tested, the jacket or lagging is put on. This, in the case of small engines, may consist simply of a sheet of Russian iron cut to the proper form, bent, and screwed to the flanges of the cylinder. In the case of large engines, a framework of flat or angle iron is fitted to the cylinder and wooden strips or sheet-steel lagging fitted to this framework. If the lagging is composed of iron or steel, it is put in place by a machinist, while if it is made of wood, the carpenter or patternmaker is called on to do the fitting.

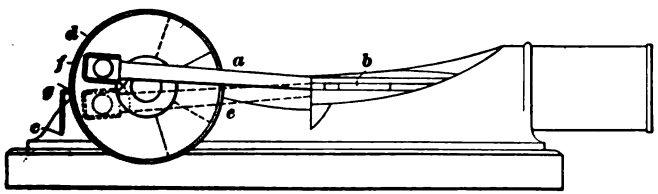

FIG. 13.

48. Placing the Engine on Dead Center.—It is often necessary to place the crank on the dead center when setting the valve, and this is done in the following manner:

The crank is turned so that the connecting-rod will stand in the position shown by the full lines *a*, Fig. 13, and a

line *b* is drawn on the crosshead and guide. A scriber or tram similar to that shown in Fig. 14 should be placed in a prick mark *c* on the bed, and a line *g* drawn on the crank. The crank should now be rotated so as to bring the rod into the position shown by the dotted lines *e*, and when the lines *b* on the crosshead and guide coincide, another line *d* is drawn on the crank. The distance from *g* to *d* may be bisected with a pair of dividers, which will give the line *f* on the crank, and when this line is set to the tram, the engine is on the dead center. This operation may be repeated when it is desirable to get the dead center on the other end. If the crank is of such form that it is not convenient to use it in this manner, the flywheel may be used instead.

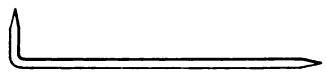

FIG. 14.

49. General Consideration of Valve Setting.—No definite rule can be given for setting the valves of steam engines, as the work is largely a matter of judgment. The valves and valve gear are designed in the drawing room and the details are worked out in the machine shop according to the drawings, which, in the case of complicated valve gears, give full directions for setting them. The slide valve is the one most commonly met and a description of the manner of setting this will be given.

As the valve gear is generally constructed, there are two ways of adjustment provided. The first consists of a change in the length of the valve stem and the second of rotating the eccentric on the shaft. By altering the length of the valve stem, the valve may be made to travel equally each way from mid-position; that is, if the valve travels $\frac{1}{2}$ inch too far toward the head end, shortening the stem half that amount pulls the valve $\frac{1}{4}$ inch nearer the crank and makes it travel equal each way, and any movement of the eccentric hastens or retards the valve action as it may be moved ahead or back.

50. Setting a Plain Slide Valve.—The valve must be made to move centrally by adjusting the valve stem and

at the right time, by moving the eccentric. To accomplish this, set the crank on one of the dead points and set the eccentric so as to give as nearly the proper angle of advance as can be judged. The lead may now be measured and the crank set on the other dead point and another measurement of the lead made. The valve may now be moved half the difference of the two leads and be given the correct lead by moving the eccentric, which should bring the lead the same at each end. No general method can be given for the detailed setting of all forms of valves, as this depends largely on the design.

51. Painting and Finishing.—All rough places on the bed are smoothed off by chipping and filing before painting, or in some cases the bed is given a coating of filling material that fills all depressions. After the bed has been filled and rubbed down with sandstone or sandpaper, it is painted. In some cases the specifications call for the testing and acceptance of the engine before painting.

52. Dismantling the Engine.—When the work is passed or pronounced correct by the superintendent or inspector, the man that has had charge of the erection of the engine oversees the taking down and prepares the parts for shipment. The lagging is usually removed and boxed. All small parts are also boxed. These boxes should be numbered and a careful record kept of their contents. The cylinder, in the case of large engines, is mounted on skids. In some cases the cylinder is covered with non-conducting material, so as to prevent the radiation of heat when the lagging is in place. This non-conducting covering may be applied in the shop previous to shipment, or may be applied in the field. All finished parts of the work are given a coating of some protective material that will prevent rusting. The bearings or fitted surfaces are boxed or covered with boards to protect them from injury. Crankpins and main shafts are sometimes wrapped with burlap or rope, and if large and finely finished, they may be lagged with wooden strips. In the case of comparatively small engines,

the entire engine is sometimes placed on skids. In case the machinery is to be shipped by rail, care should be taken to see that the heavy parts of the load come over the trucks, the lighter parts, boxes, etc. being located near the center of the car. All parts should be securely fastened, so that they cannot shift during shipment.

53. Foundation-Bolt Templet.—While the engine is being erected in the shop, a templet for locating the anchor bolts in the foundation is made. This templet should include all bolts for securing the engine bed, cylinders, and outboard bearing to the foundation, and in the case of a large and complicated plant like a hoisting engine, should also include the bolts for the steam brake, steam reverse, drum-shaft bearings, etc. The templet is usually laid out

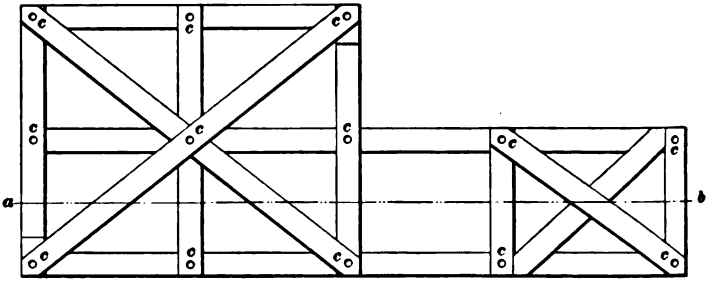

FIG. 15.

from the drawing, after which all the dimensions should be checked by actual measurements of castings, in order to see that there is no discrepency between the drawing and the casting. After the holes have been properly laid out, they are bored the same size as the anchor bolts. This templet is usually made of 1-inch white pine lumber and must be thoroughly braced. Fig. 15 shows a plan of such a templet.

ERECTION OF ENGINE ON FOUNDATION.

54. Foundations.—The foundations may be composed of masonry, brick, or concrete, and the bolts may be built into the foundation or the foundation may be made with

pockets at the bottom for the washer and nut, and holes left for introducing the bolts later. In some cases, these holes may be made by building wooden boxes or iron pipe into the foundation. In still other cases, the foundations are built with pockets near the bottom, and then the masonry or concrete built up solid, after which the bolt holes are drilled with a diamond drill. When the foundation is made of concrete, it is usually better to build the bolts right into the foundation.

55. Setting the Foundation Bolts. — The anchor bolts may be held down in a variety of ways. Sometimes a washer is placed on the lower end of the bolt. In other cases a stirrup is formed at the lower end of the bolt and pieces of railroad iron passed through this, as shown at *a*, Fig. 16. The foundation-bolt templet *b*, Fig. 16, is supported on suitable blocking, the bolts passed through the holes of the templet, and the pieces of rail *a* placed through the stirrups *c*. The

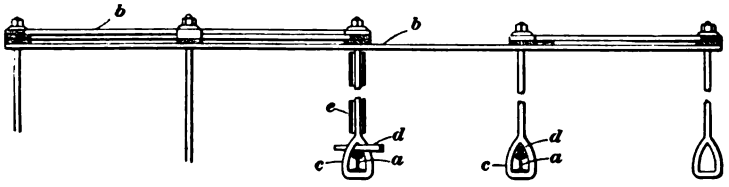

FIG. 16.

rails should be wedged against the bottom of the stirrups by driving the wedges on top of the rail, as shown at *d*. In order to allow some adjustment in the bolts, some parties prefer to place a piece of pipe about the bolt, as shown at *e*; but if the templet has been accurately made, it is usually best to put the bolts in solid. At all events, if the foundation is deep, it is only necessary to use a short piece of pipe surrounding the upper 2 or 3 feet of the bolt.

56. Appliances for Erecting the Engine on the Foundation. — The engine is usually erected on the foundation by the same man that did the erecting in the shop. In the shop, the erector has the advantage of all the

shop tools and appliances, including cranes, special tools, etc. When the engine is shipped from the works, the man that is to go with it selects such tools as he requires. The tools needed vary greatly with the work and with the locality in which the engine is to be erected. Some large modern power houses have traveling cranes in the engine house that can be used in erecting the engine or for any future repair work. In this case very few tools will be required. If the engine is to go into a region a long distance from any shop, as, for instance, a mining camp, the erector must take practically everything that he will require with him. Usually one or two hydraulic or stone jacks, a few jack-screws, and some pinch bars will be all of the larger tools necessary, and, in addition to this, a liberal stock of wrenches, hammers, chisels, and other tools that may be necessary should be taken. All the small tools, together with supplies, waste, oil, etc., should be kept in locked tool chests. In case heavy parts have to be hoisted some distance, it may be necessary to take a chain block or a hand windlass, crab, or winch, to be used in connection with a block and tackle. Sometimes it is convenient to take a stock of rollers and blocking, but usually these can be obtained in the field.

57. Setting Engine on Foundation.—The engine bed and cylinder is placed on the foundation and the various parts bolted together. All the dowel-pins are placed and the engine is lined up by stretching a line through the cylinder and beyond the crank, just as was done in the shop. The engine can be supported upon iron or steel wedges during this operation. The outboard bearing can be put in place and squared by means of the crank, as described in Art. **40.** After the engine has been bolted together and lined up, the space between the bottom of the bedplate and the foundation may be filled with some suitable compound. In some cases melted sulphur is used, in others a mixture of iron chips and sal ammoniac is rammed in with a corking chisel, while in still other cases Portland cement mixed in a

proportion of 1 part cement to 2 parts sand is employed. When the cement used has hardened, the flywheel or pulley may be put in place and the caps over the bearings adjusted. All parts that are subjected to friction should be thoroughly oiled before being put into place, as an unoiled surface may easily cut in the first few revolutions before the oil reaches it through the oil hole. The crosshead is put in place, the piston slipped in and connected with the crosshead, after which the connecting-rod is put on. The governor, valve gear, oiling device, lagging, and piping are all put in place and properly arranged.

The engine may now be turned over a full revolution by hand to make sure that all is clear. Next, care should be taken to see that everything is in adjustment; then the steam may be turned on and the engine started very slowly. After the engine is started with steam, a thorough inspection of all working parts should be made and all the oiling devices properly adjusted. Any parts that have been left too loose may now be tightened to proper running fit, and any part that shows a tendency to heat should be examined and adjusted. After the engine has been running at full speed for some time, it may be belted up and kept at work while the indicator test is being made. This test will usually show any defect in adjustment of valve setting, which may be corrected at this time.

ERECTING A VERTICAL STATIONARY ENGINE.

58. General Consideration.—The method followed in erecting a vertical engine does not differ materially from that used in the horizontal engine, but as the parts are differently arranged, and in most cases some additional parts are required, a description showing the principal points of difference may be of interest. As a rule, it is more difficult to erect a vertical engine without the aid of cranes or hoists than in the case of a horizontal engine. Very large horizontal engines are frequently put up in the

field without any hoisting tackle whatever, all the parts being moved on rollers and lined up by means of jack-screws. In the case of a vertical engine, it is usually necessary to rig a derrick, shear legs, or some hoist when in the field.

59. Work Necessary on the Bed. — The bed *a*, Fig. 17, is leveled up by means of wedges or erecting jacks, as in the case of a horizontal engine. The bearings for the crank-shaft may be scraped after or before the guides are in

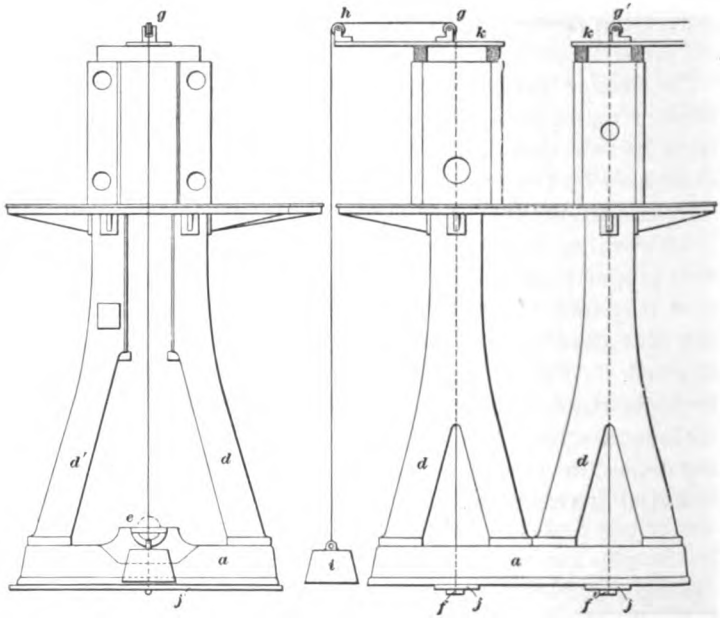

FIG. 17.

place. Sometimes, to aid in scraping these bearings, a hollow cast-iron shaft is made of the same diameter as the crank-shaft. This is lighter than the crank-shaft and serves as a surface plate for scraping the bearings into line.

60. Fitting the Guides and Cylinder.—The frames and guides *d* and *d'* are placed upon the bed and temporarily bolted down. A center line along the center of the shaft is established by placing blocks across the bearings, as shown

at *e*. A piece of tin is fastened to the center of each one of these and a center line marked on it. A long straightedge is then laid across both blocks and a center line established. A line, as *f g h i*, is stretched through each cylinder. The line is secured at the bottom to a plank *j*, which is blocked or clamped to the bottom of the bedplate and has a hole in the center through which the line passes. At the upper end, above the cylinders, the line is secured to the plank *k*. The line passes over pulleys at *g* and *h*, and is kept taut by a heavy weight at *i*; a piano wire capable of standing a breaking strain of 400 pounds is usually used for this purpose, and the weight at *i* may vary from 100 to 200 pounds. This weight should be so located that it will do no damage if the wire should break. After the line is established, the guides and cylinders are adjusted to it. If desired, the weight at *i* may be hung under the cylinders in place of the plank *f*; great care must be taken to see that the lines *f g* and *f' g'* are the same distance apart both top and bottom and are in the same vertical plane.

61. If it is found that the cylinder does not come in line with the guides, packing pieces must be placed between the cylinder and the guides, as in the case of a horizontal engine, after which a sufficient amount must be dressed from the end of the cylinder or the intermediate piece, bringing the two into alinement. In measuring from the line to the cylinders, or from the line to the guides, a wooden measuring piece may be used, as described in Art. **35.** After the cylinders and guides are properly located, they are securely clamped in place, and the bolt holes for holding the uprights to the bed, the guides to the uprights, if the latter are made separate, and the cylinders to the guides, are reamed ready for the bolts, and the holes for the dowel-pins are drilled and reamed and the pins fitted.

62. Placing Reciprocating Parts.—The placing of the reciprocating parts of a vertical engine does not differ materially from that of horizontal engines, and the method of squaring the crank-shaft to the center line that is used in

the horizontal engine can also be employed in the vertical engine. The piston, piston rod, crosshead and connecting-rod, and valve gear are all assembled in their proper place after the crank-shaft is in position. The cylinder head is also put on.

63. Oiling Devices and Smaller Parts.—In some cases, vertical engines are fitted with separate oiling devices for each bearing, while in other cases an oil tank is arranged at or near the cylinder from which pipes lead to the various bearings. All these devices are placed in position during erection. Owing to the fact that many parts of the engine are not accessible from the floor, it becomes necessary to provide some device by means of which the attendant can reach any part of the engine. To accomplish this, platforms or floors are built around the engine at different elevations. These platforms are usually iron plates supported on brackets, and are reached by staircases leading from the floor of the engine room. These brackets and plates are all placed in position as the various parts of the engine are being assembled. In the outer edge of the plates, provision is made for standards, which carry a hand rail, usually composed of a piece of brass or iron pipe. Large vertical engines are often provided with hand or similar turning gear for turning the engine around a portion of a revolution in starting or when fitting belts. They are also supplied with a steam vacuum, revolution gauges, and a clock. Provision must be made for attaching these to the engine frame, though they are not generally assembled in place until the engine is erected upon its foundation.

64. Dismantling Vertical Engines.— After an engine has been erected and tested, it is dismantled in a manner similar to that used in taking down large horizontal engines. The lagging, if necessary, is removed from the cylinders and all the small parts are boxed, while the larger ones are crated. In the case of vertical engines it is generally necessary to dismantle the engine to a greater extent than in the case of a horizontal engine. The same

precautions in regard to marking parts and boxes and distributing the work on cars that are followed in shipping horizontal engines should be observed in the case of a vertical engine.

65. Erecting on Foundation. — The erection of a vertical engine on the foundation does not differ materially from that of a horizontal engine, with the exception of the fact that in some cases a line is not stretched through the engine when it is erected on the foundation. When no line is used, bolts and dowel-pins are depended on entirely for bringing the parts into line. Care must be taken in erecting a vertical engine to see that the bedplate is carefully leveled and has a firm bearing before the other and heavy parts are assembled on it.

LOCOMOTIVE ERECTION.

METHOD BY PLACING BOILER FIRST.

66. General Consideration of the Subject.—Locomotive erection varies in different shops, not only owing to the ideas of different men, but also from the varying facilities of shops. The methods used in one of the best and most modern locomotive shops will be described. In this method the boiler is placed in position first and the other parts assembled about it.

67. Placing the Boiler.—Fig. 18 shows a locomotive boiler that has just been brought into the erecting shop. The length of the top part of the blocking *a* under the firebox end must be less than the distance between the two frames, so as not to interfere with putting in the frames. The barrel or shell of the boiler is supported by a strong trestle *b* that rests on blocking *c*. It is not necessary that the boiler be level endwise, but care is taken to plumb the boiler sidewise. The center of the dome *d* should come over the center line of the bottom of the firebox, and each side of the

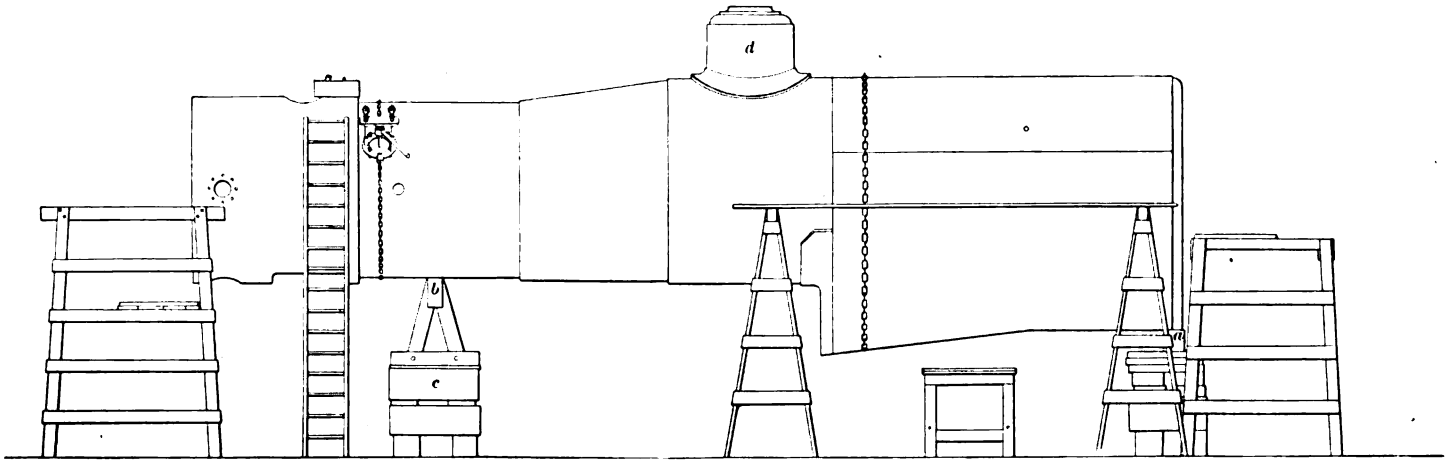

FIG. 18.

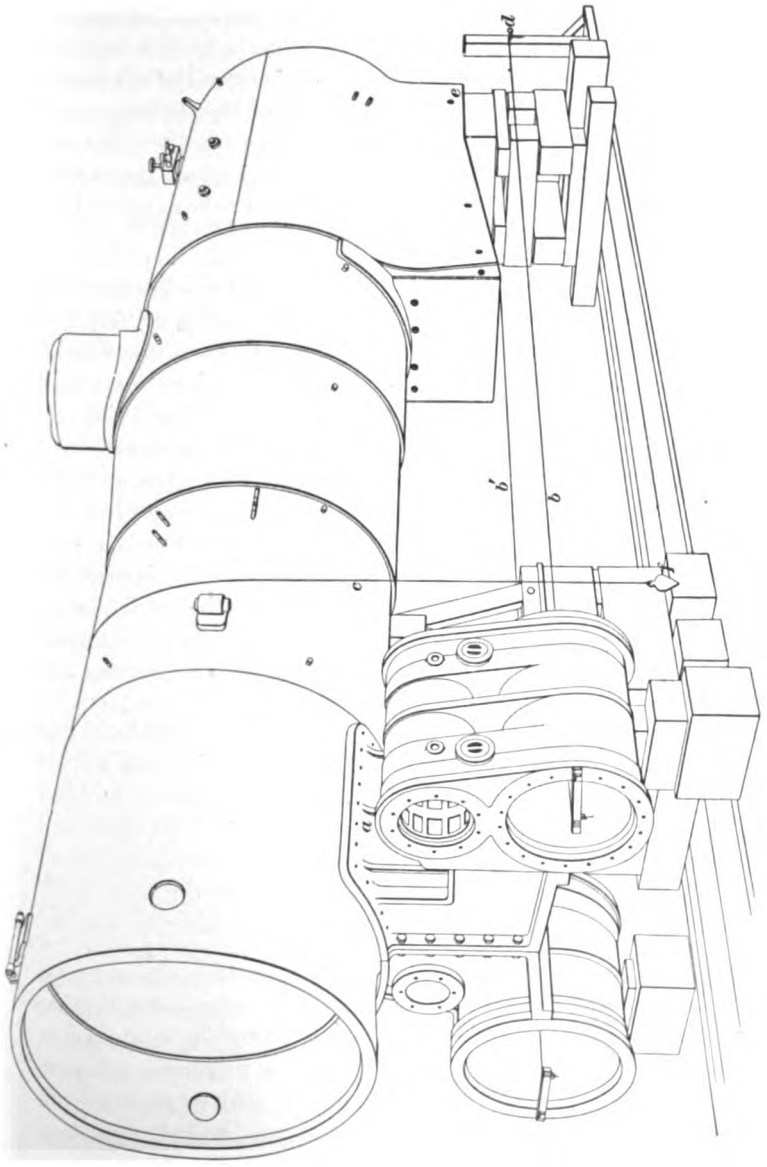

FIG. 19.

barrel of the boiler should be equally distant from the vertical center line. Should there be any slight discrepancies they may be averaged. In other words, in case it be found that with the center of the dome plumb over the center line of the bottom of the firebox, the barrel of the boiler projects more on one side of the vertical line than on the other, the sides of the boiler may be brought equally distant, or nearly so, from the center of the bottom of the firebox, even if the dome be slightly to one side.

68. Placing the Cylinders. — The cylinders are brought about to their place, the saddle *a*, Fig. 19, being in contact with the barrel of the boiler, and center lines *b* and *b'* are run through each cylinder and fastened to some fixed object, as *d*, back of the firebox. These lines *b* and *b'* should be parallel and equally distant from the sides of the front end of the boiler shell, as shown by the line *c* hung over the top of the boiler shell, and hanging down from either side with weights *f* attached, making a plumb-line on both sides. The two center lines are brought to the desired distance, plus the amount to be chipped off the saddle, below the bottom of the firebox at the point *e*. This is accomplished by placing a straightedge under the firebox at *e* and measuring to the lines *b*. The horizontal distance from the sides of the firebox to the lines *b* are also determined and made equal on both sides. A chipping line is then scribed all around the saddle, and the cylinders moved out in front of the boiler and chipped to line. The cylinders are then returned to their place in contact with the boiler shell, tested by the lines again, and, if necessary, taken out and again chipped to make any slight correction that may be needed.

69. The surfaces of the saddle *a* between the chipping blocks are then filled with cement to give a solid bearing between the saddle and the boiler. Different makers use different materials for this purpose; for instance, asbestos, stove putty, red- and white-lead cement with or without iron chips incorporated therein; at least one maker uses iron chips and sal ammoniac, making a rust joint. In this case,

considerable care is necessary to use just the right amount of material, as there is no chance to calk or drive it. After the space in the saddle has been filled, the cylinders are bolted to the shell and blocking is placed under them to take the weight of the front end of the locomotive. The trestle *b*, Fig. 18, is then removed from under the barrel of the boiler, as it would be in the way during later operations.

70. Placing the Frames. — The frames are next placed in position as shown in Fig. 20. They are bolted to the cylinders at the front end, and at the back end the foot-plate *a* is bolted in place. This spaces them properly at the back end. The waist sheet *b* is also attached to the frames, but not to the barrel of the boiler. The guides *c* and *d* are bolted to the cylinders and blocked in place. In this illustration, the lower guide is supported by a jack-screw and the upper one by blocking and a bolt placed on the lower guide. While this is going on, other men have been at work putting in the tubes and dry pipe, drilling and tapping the gauge-cock, and cleaning plug holes, also holes for studs for the running-board brackets, sand box and bell, steam combination globe, or steam turret, and other holes that may be required.

71. Lining the Guides.—The back ends of the guides are supported by the guide yoke *a*, Fig. 21. A line *b* is passed through each cylinder to a piece of board held in the pedestals, as shown at *c*. These lines are centered in the front ends of the cylinders and in the piston-rod glands and are brought to the proper distance sidewise from the pedestals. After the lines are in place, the guides and guide yoke are brought to their places by the lines. About this time the waist sheet *d*, Fig. 21, is secured to the barrel of the boiler by the angle *e*. After the guides and guide yoke are in place, the yoke is secured to the frames by proper attachments and to the boiler by a sheet and angle, as shown at *a*, Fig. 22. While this work is going on, the holes for the furnace pads (also called expansion pads or bearers) are drilled as shown at *f*, Fig. 21, and the pads and links put on, as

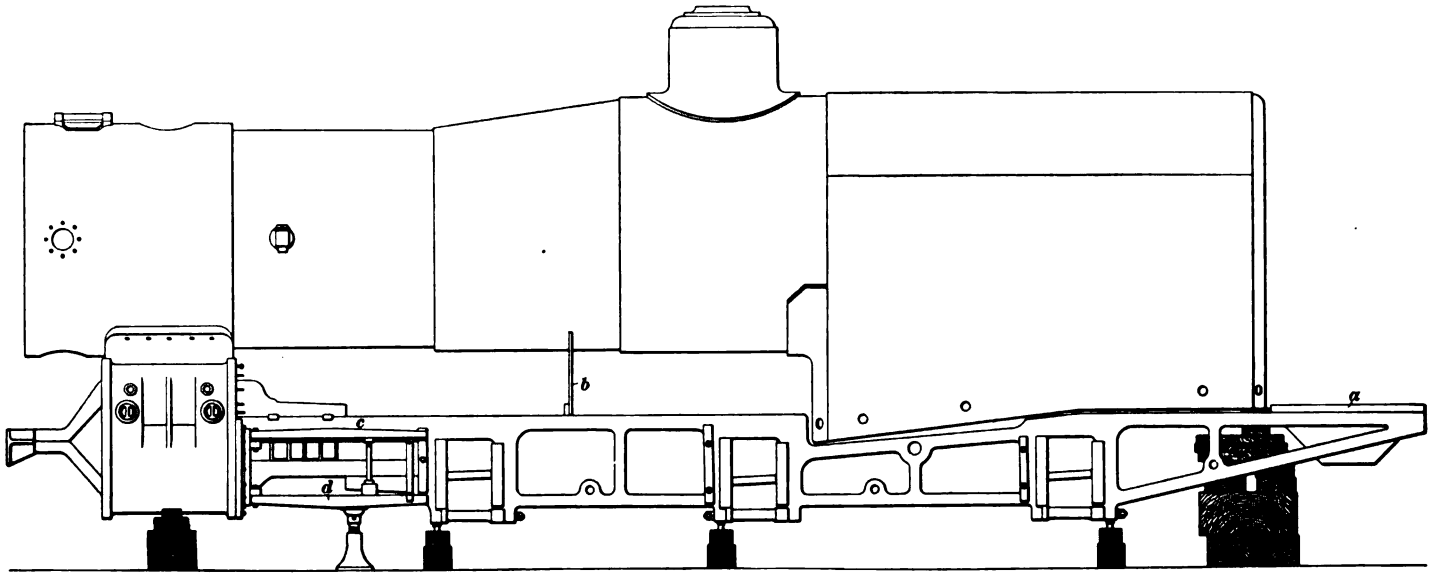

FIG. 20.

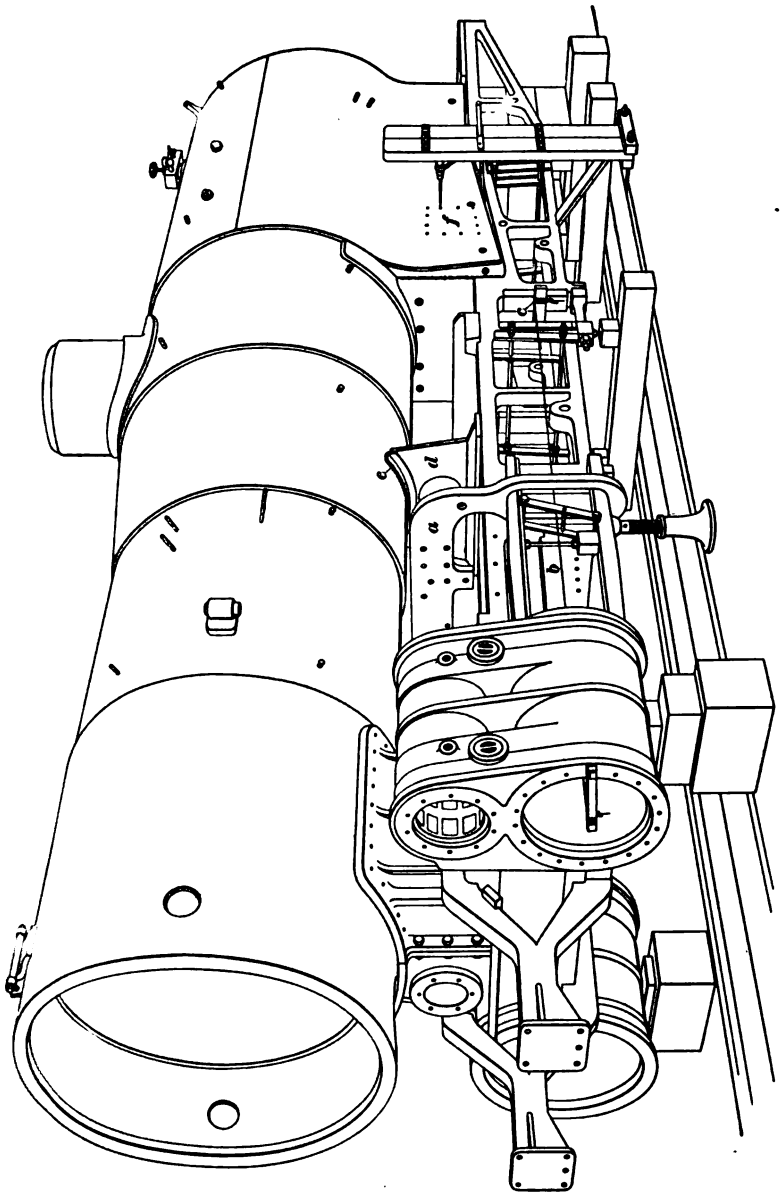

FIG. 21.

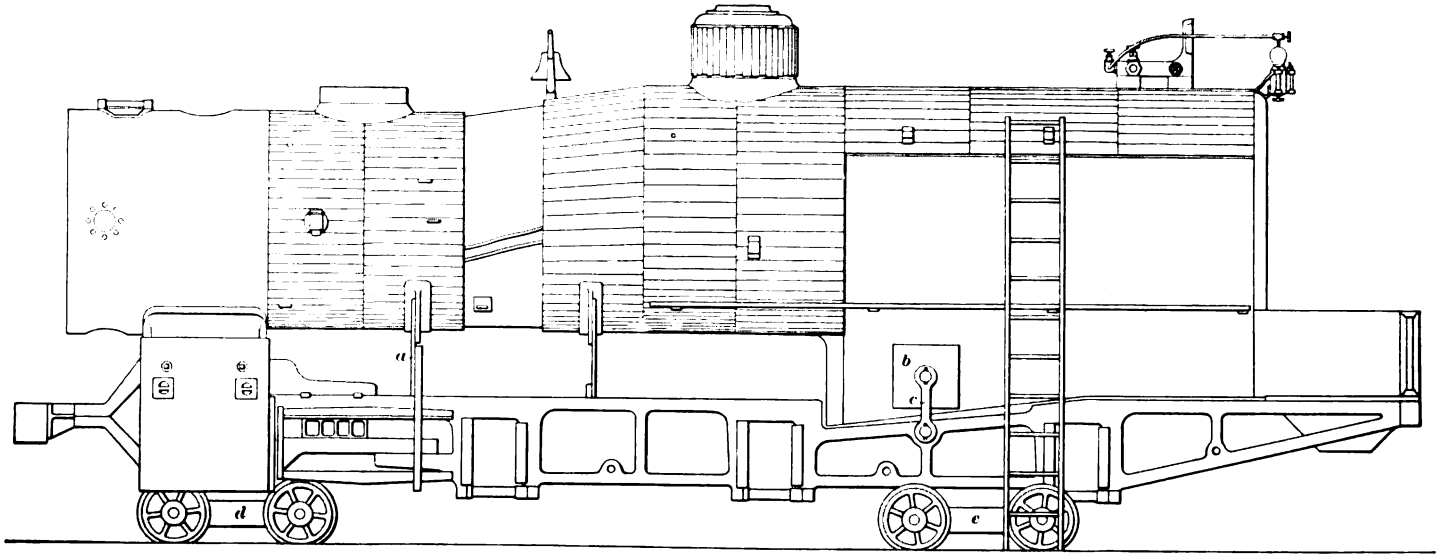

FIG. 22.

shown at *b* and *c*, Fig. 22. Other men are placing other details in place, such as the bell, stack, oil pipes, etc.

72. Firing.—The firing, or testing, of the boiler in some shops is done without taking the engine from the erecting floor. A better way is to run two temporary trucks, made expressly for the purpose, under the locomotive, as shown at *d* and *e*, Fig. 22, thus enabling the locomotive to be easily hauled out on to the transfer table and moved to the firing room. Locomotive boilers have been tested by using steam piped to them from a high-pressure stationary boiler installed for the purpose, but that method is not considered as good practice as to use a fire in the firebox of the locomotive under test. For the fire causes greater heat in the firebox than steam from a stationary boiler could, and as in actual work the fire will be present, it is best to test the boiler under working conditions.

73. Testing the Boiler.—The boiler is first filled clear to the top of the dome with hot water through an injector. Any leaks that may appear are tightened by calking and a water pressure of 240 pounds is slowly applied. The pressure is taken off and any other leaks that may have appeared are calked, having been marked with chalk before the pressure is removed. The water is lowered to one gauge and a fire started in the firebox. The water will rise to two gauges by expansion. Steam pressure is raised to 240 pounds and let down to 50 pounds, again raised to 240 pounds and let back to 50 pounds, which process is again repeated for a third time. The oil pipes are tested at the same time to see that they are all right before they are covered with the jacket. The jacket is not placed on the boiler until it is returned to the erecting shop after firing.

74. Placing of Wheels and Valve Gear.—The locomotive is now brought back to the erecting shop and lifted from the temporary trucks by the traveling crane, and its own wheels are run under it, including the truck, and the engine is lowered to its place, as shown in Fig. 23, the links

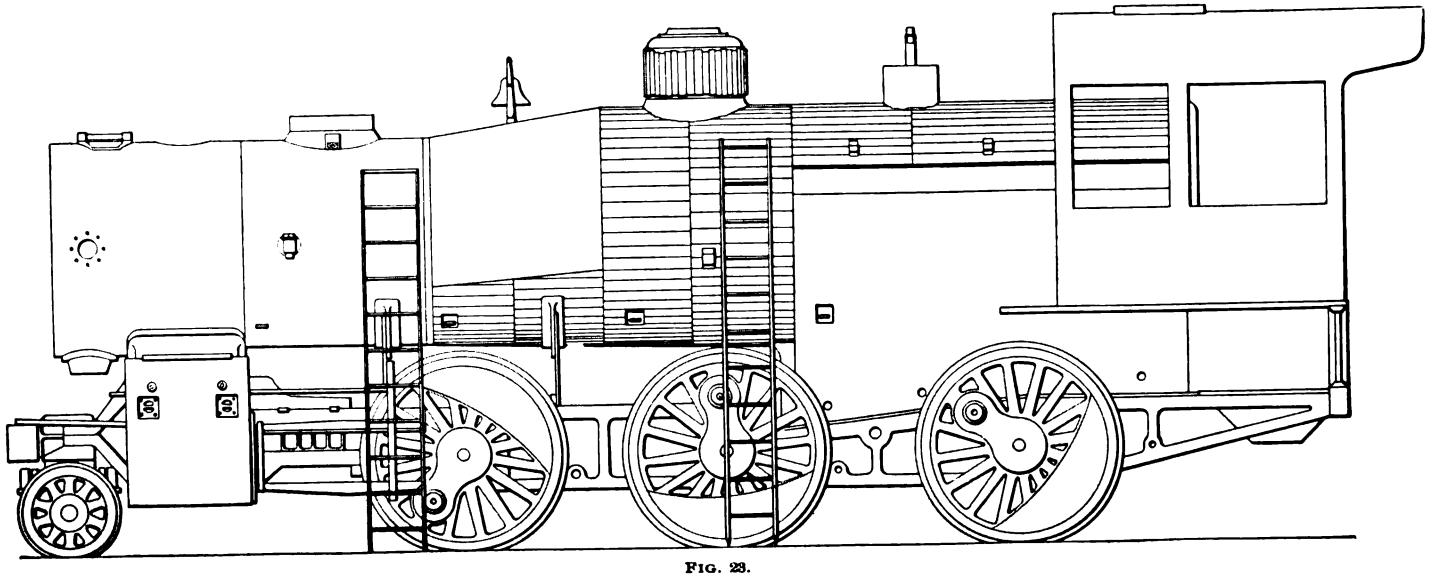

FIG. 23.

and motion work put up, and the valves set. At the same time, the boiler is being covered or lagged with a non-conducting material, and the planished iron jacket and the running boards, cab, and pilot, which have been finished in another shop, are put in place.

75. Painting.—The painters have been following the machine work much of the time, as opportunity offers. The cab and sand box, and some other parts, are painted before being brought to the erecting shop.

76. Tender.—The tender is made complete in another department and painted ready to attach to the locomotive after it is run out from the erecting shop.

77. Erecting Pit.—To enable men to work under the locomotive, a pit about 38 feet long, 47 inches wide, and 32 inches deep is usually provided between the tracks of each erecting stall, beginning about 14 feet from the door.

METHOD BY PLACING CYLINDERS AND FRAME FIRST.

78. Placing the Cylinders and Frame.—In some shops, quite a different order of erection is followed. The cylinders are first placed on four jack-screws, the saddle having been machined to the same radius of the smokebox. The frames, guides, guide yokes, foot-plate, buffer beam, and some other parts are put in place and the cylinders jacketed, the frames being supported at the back end on jack-screws.

79. Placing the Boiler.—The boiler is then brought by the traveling crane and lowered to its place, and the connections between the frame and cylinders and the boiler are made. The whole engine is then lifted by the crane in readiness to receive the wheels, which are now rolled underneath and the boiler frame and attachments lowered to place after which the stack and pilot are put on, the boiler tested,

lagged, and jacketed, the rods and valve work put up, and the running board, cab, and fixtures, and other parts are put in place.

80. Comparison of Two Methods.—The main difference between the two plans described is, briefly, as follows: In the first plan, the boiler is the starting point, or backbone, and all the other parts are built around it. In the last-mentioned case, the main part or skeleton of the engine is assembled, or erected, and the boiler added, after which the running gear and balance of engine are put in place.

GENERAL HINTS ON SHOP PRACTICE.

LUBRICANTS.

INTRODUCTION.

1. A lubricant may serve for either one of two entirely different purposes, and should, consequently, be selected in accordance with the purpose for which it is intended. In practice, a lubricant is used either in order to reduce the friction between two bodies one of which moves on the other, or in order to carry away the heat generated by a cutting operation.

LUBRICANTS FOR REDUCING FRICTION.

2. Selecting a Lubricant.—A lubricant reduces friction by interposing itself in the form of a thin film, which may be considered as being composed of a large number of minute globules, between the rubbing surfaces of the moving bodies. These globules act as rollers or balls, and convert the sliding friction into a rolling friction to an extent depending on their deformation under the load they carry. The deformation of the globules of the lubricant depends on its consistency, and is greater for a thin lubricant than for a heavy and thick one. For this reason a thick oil should be

Copyright, 1901, by THE COLLIERY ENGINEER COMPANY.
Entered at Stationers' Hall, London.
All rights reserved.

selected, while for light pressures a thin oil may be used. The contact between the rubbing surfaces must also be duly considered in connection with the selection of a lubricant, selecting one that is fluid enough to flow in between the surfaces. Thus, in machine tools and fine machinery, the rubbing surfaces are usually fitted very closely to each other, and, hence, fluid mineral oil having sufficient body to last a reasonable length of time must generally be used.

3. Cleaning Bearings.—Refined petroleum (also called **kerosene, coal oil,** or **paraffin** in different localities) and **mineral sperm oil** are among the most fluid commercial oils, and will flow into smaller spaces than heavier oils; both have the disadvantage, however, that they lack body; i. e., they will evaporate quickly and, consequently, are of little value as a lubricant. They are of great value however in cleaning rubbing surfaces, as they will dissolve or thin down almost any heavier oil, and can be used for cleaning bearings, etc., where it is suspected that the oil channels have become clogged by the gumming of the regular oil that is used. In such a case, a copious and constant supply of kerosene or mineral sperm oil may be applied to the bearing until the oil comes out clear; it must then immediately be followed by a copious application of the heavier oil generally used for lubrication, in order to prevent any cutting of the rubbing surfaces owing to their becoming dry through the rapid evaporation of the light oil.

4. Thinning Oils.—The lighter oils can often be used advantageously for thinning down the heavier oils in order to make a grade of oil suitable for some special purpose. Most of the lighter oils are quite inflammable, and, consequently, due care must be taken to prevent their ignition.

5. Volatile Oils.—Benzine, naphtha, and **turpentine** are used considerably in shops for cleaning purposes; these oils evaporate very rapidly and form vapors that are highly inflammable. If these vapors are mixed with air in certain proportions, they will form explosive mixtures that

need but a spark to ignite them. For this reason, great care should be taken not to have a naked light or any fire close to a place where any of these volatile oils are stored or used.

6. Oil for General Shop Use.—For general shop use, a mineral oil having considerable body is well adapted. It should be thin enough to run freely through the oil holes and oil channels of bearings. Animal oils are generally objected to on account of the fact that decomposition by age is liable to develop fatty acids that attack most metals. Furthermore, animal oils are very liable to gum; i. e., some of their constituent parts will collect into a sticky mass that closes up the oil channels of bearings. All oil intended for lubrication should be entirely free from grit. By examining a drop of the oil with a strong magnifying glass, the presence of grit is readily discovered.

7. Cylinder Oil.—A special grade of heavy oil known to the trade as **cylinder oil,** is intended to be used for the lubrication of parts subjected to fairly high temperatures, as the valves and pistons of steam engines. It has the property of standing considerable heating without volatilizing or being decomposed. Owing to its heavy body it is used somewhat for bearings subjected to heavy pressures.

8. Grease.—For very heavy work and relatively low rubbing speeds, one of the many forms of manufactured grease, such as **Albany grease,** for instance, is frequently used. The bearings must then be fitted loosely enough to admit the grease. The great body, which is the characteristic feature of grease, prevents its being crushed or squeezed out by the weight of the moving parts.

9. Grease of the best quality may be used to advantage in putting ball-bearing work together, when difficulty is experienced in keeping the balls in place while assembling the bearing. The ball races, or seats, are filled with the grease and the balls are then pressed into it. The grease will hold the balls in place while the parts are being put

together, and will serve to lubricate them for a long time afterwards. This is a very convenient aid in assembling the ball bearings of the pneumatic drilling machines, now so commonly used in large shops, and, also, of bicycles.

10. Bearings of shaftings and machines that are subject to great wear and are not at all times under the eye of the attendant, or easily within reach, and, hence, are liable to run dry with the ordinary methods of oiling, are provided for in the following manner: Grease cups are screwed, or grease pockets are cast, on places where bearings are liable to heat; these are filled with a grease that will not melt at the ordinary temperature of the bearing, but as the bearing becomes warm, this grease melts and runs down through the oil holes to the surfaces needing lubrication.

11. Graphite.—The mineral substance known technically as **graphite,** and in shop parlance as **black lead,** or **plumbago,** forms an excellent lubricant, which when ground fine may be used either dry or may be mixed with some fluid lubricant or grease to a consistency considered suitable for the work. Graphite is one of the most refractory substances known; this fact makes it an invaluable lubricant for bearings subjected to high temperatures. Its lubricating qualities at all temperatures are so high that it forms a very valuable addition to almost any oil.

12. Curing Hot Bearings.—A bearing will get hot by reason of friction due to an insufficient or interrupted supply of the lubricant, or by reason of the journal fitting so close that the lubricant cannot pass between the rubbing surfaces. The first thing to do when a bearing gets hot is to supply it with a liberal quantity of oil, repeating the application frequently until the bearing commences to cool. If the bearing becomes so hot that it smokes before it is discovered, and it is not advisable to stop the machine, water may be turned on the bearing, pouring it down the oil hole, or playing a hose on it until it is cool. When a hot bearing is discovered, the cap may be slacked back somewhat so as to allow a free circulation of the lubricant. As soon as the

bearing is cool, a copious and constant supply of oil, which may have some graphite mixed with it, should be provided for the bearing and the results should be noted. If the bearing refuses to keep cool after this, it generally shows that the rubbing surfaces are in such a bad condition as to need refitting.

13. Oil Holes and Oil Channels.—Various means are provided to make sure that the lubricant reaches the place or surface it is intended to cover. In the first place, oil holes are drilled through the metal from the high side so that the oil will reach its proper place by gravity. The size of the oil holes should vary with the kind of lubricant that is to be used, drilling small holes in small work and for a fluid lubricant, and larger ones as the density of the oil and the length of the hole increase. Bearings that are not easily reached must have tubing or pipe run to them as directly as possible; this oil piping should be supplied with fittings that allow it to be easily taken down and cleaned.

14. Oil channels should be cut so as to distribute the oil over the whole length of the bearing; also, such other channels should be provided as may be needed to insure an even distribution of the lubricant. In order to insure thorough lubrication, the oil channels must have a liberal width and must be deep enough so as not to become filled too rapidly with the impurities some lubricants contain. Furthermore, the direction in which the oil channels run from the point of supply (the bottom of the oil hole) should be the same as the direction of rotation of the journal, in order that the latter may tend to draw in the oil rather than to repel it. A lubricant will not flow up hill any more than any other liquid; hence, the lubricant should always be applied at the highest point permitted by circumstances.

15. Special Oiling Method. — Small planers have their ways oiled by hand whenever they show any indication of becoming dry. Large planers are usually provided with means for a constant lubrication, as, for instance, oil wells cored out in several places in the ways. These

wells are filled with oil that is delivered to the ways by conical brass rollers that are pressed against the V's of the platen by springs. This method of oiling is perfect as long as reasonable care is used to prevent an accumulation of dust and dirt in the oil wells, which would finally interfere with the free action of the rollers.

16. Keeping Greasy Waste. — Enough lubricant should be applied to machinery, and in the right place, to insure a thorough lubrication; and any dirty surface should be wiped off so as to keep the machine as neat as possible. Waste is generally used for this purpose; when dirty, it is often thrown upon the floor or into out-of-the-way places; or it is left lying on the work or machine. This is an extremely bad practice, being not only wasteful and dirty, but also very dangerous on account of the liability of the waste to take fire either from spontaneous combustion or otherwise.

17. All waste or greasy material of this sort should be put into sheet-iron tanks or barrels located at convenient points throughout the shop. These tanks should be made of heavy galvanized iron or steel, and should have legs to keep their bottoms 2 or 3 inches above the floor. They should be riveted together, instead of being soldered, so that if the material in them does get on fire, they will not come apart and set fire to the building. A good tight-fitting cover should be kept on the tank at all times, so that if fire does start in the waste, it will be smothered before gaining much headway. These tanks should be taken out and emptied at stated times.

LUBRICANTS FOR CARRYING AWAY HEAT.

18. Why Used.—The cutting speed of a tool may often be considerably increased by the application of some kind of lubricant, such as oil or water. When oil is used, it reduces the friction between the shaving and the face of the tool, and thus reduces the heating. If a sufficient

quantity is used, it also carries off a great deal of the heat generated by the cutting operation and keeps the tool from getting as hot as it otherwise would; consequently, it is possible to increase the cutting speed without overheating the cutting edge.

19. Lubricants for Steel and Wrought Iron.— The best lubricants for cutting steel or wrought iron are the best grades of lard oil or sperm oil. One of these oils should be used for all tapping or reaming operations. For turning shafts, soda water is used, or in some cases a mixture of soft soap and water. Soda water is an excellent medium for absorbing heat, the soda being used to keep the water from rusting the machines or the work. Soft soap dissolved in water is used in some shops instead of soda water and possesses some lubricating quality. When a finishing cut is taken on soft steel with a keen tool and a supply of water is kept on the tool, a very bright, smooth surface is produced. Such a cut is called a **water cut**; some kinds of work are thus finished with sufficient smoothness to make polishing unnecessary.

20. When Lubricants Are Not Used.—Cast iron is usually worked dry. The dirt caused by mixing fine cast-iron turnings with oil or water on the machine is an objectionable feature that more than overbalances the increased cutting speed that might be obtained. Furthermore, it is difficult to take a light cut on cast iron when it is oily. The oil soaks into the surface of the iron for a short distance and seems to form a skin that is not easily broken. If the cut is deeper than a finishing cut, the oil on the surface will not impede the cutting. Brass, copper, and Babbitt metal are generally cut without a lubricant, although it is becoming the practice to flood work composed of these metals with lard oil in automatic screw-machine work so as to reduce friction and increase the life of the tools.

21. Filtering Oil.—Oil that has been used over a number of times is liable to be filled with very fine chips that separators will fail to remove. Such oil may be filtered

through a regular oil filter; in the absence of such a device, blotting paper will be a fair substitute. Some of the heavier particles of metal in the oil can be gotten rid of by letting the oil stand in a quiet place for some time, when the heavy foreign matter will settle to the bottom of the vessel. The clear oil may then be poured off into another vessel. This settling process will fail to clean the oil as effectually as an oil filter will do. Oil cleaned by the settling process should never be used for lubricating bearings, but only for the cutting tools. An oil filter or settling tank will not work well if kept in a cold place.

22. A Cheap Lubricant. — For some work, a cheap and satisfactory lubricant may be made by combining oil with other ingredients. There are many such mixtures in use in which an oil is first thinned down by mixing it with a cheap liquid like soda water, and then adding some ingredient that will give body to the lubricant; i. e., thicken it enough to make it somewhat adhesive.

23. A good mixture may be made by mixing together $\frac{1}{4}$ pound of sal soda, $\frac{1}{2}$ pint of lard oil, $\frac{1}{2}$ pint of soft soap, and enough water to make 10 quarts. This should be boiled for half an hour and well stirred When cool, it is ready for use. This mixture can easily be handled by a pump, and is quite satisfactory for general use.

24. A Lubricating System.—When a large number of machine tools are kept busy on work where constant lubrication is deemed essential, it is often convenient to place the tank containing the lubricant in some warm out-of-the-way place, as in the boiler room. A system of piping having branch pipes leading to the different machines may then be laid through the shops. A force pump of some kind should be placed near the tank and have its suction pipe connected to it, while its discharge pipe connects with the pipe system. All the drippings may be automatically returned to another tank near the first through a separate pipe system so arranged that they will flow back by gravity.

By grouping together all the machines requiring lubrication, the piping system can be made relatively inexpensive. The placing of the tank in the boiler room is especially convenient in the case of mixtures that require boiling, since a steam coil can then be placed in the tank at small expense.

25. Lubricants for Cutting Babbitt Metal.—Babbitt metal may be worked dry in most cases, but when bushings of this material are being bored in the lathe or when boxes are machined in position, it is often found that a lubricant is necessary. This is especially true of bushings that are being bored in the lathe, since the chip has a tendency to wind around the boring tool and form a compact ball. Boxes that have been bored and are to be reamed will sometimes be scored or roughened in the reaming if the work is done dry. Lard oil is sometimes used in working Babbitt metal, but a copious supply of kerosene oil will give far better results than any other lubricant.

26. Drilling Rawhide.—It is sometimes necessary to drill rawhide with a twist drill; this, in general, will be found a trying and tedious job, on account of the clogging up of the flutes of the drill when the drilling is done dry. If a cake of ordinary laundry soap is held against the drill every little while, however, no trouble will be experienced. The drill should be run quite fast for drilling rawhide.

OIL SEPARATOR.

27. Shops in which a great deal of screw-machine work, milling, and tapping of wrought iron or steel is done, use correspondingly large quantities of oil to lubricate the cutting tools. This oil becomes mixed with the cuttings or chips from the work, and while most of this oil can be drained off, a large amount adheres firmly to the chips and is usually thrown away. Much of this oil may be saved by collecting the oily chips, and running them through a centrifugal separator. This separator consists of a circular tank that is open at the top and is provided with a cock in

the bottom, in order to allow the extracted oil to be drained off. A vertical spindle passing up through the center of the tank carries a strong conical steel pan provided with an equally strong cover that is held on, when in use, by a lock-nut. The edge of the pan has small openings for the escape of the oil. A pulley is provided on the lower end of the spindle to drive the extracting pan, and is belted to an overhead countershaft.

28. As many of the oily chips as it will hold are placed in the pan, the cover is securely fastened, and the machine started slowly and allowed to come up to its full speed, which should be about 7,000 feet per minute at the periphery. The oil is thrown from the chips by the centrifugal force and finds its way out through the small openings in the top edge of the pan. It is caught, as it flies from the pan, by the wall of the tank, and is prevented from flying upwards out of the tank by a contraction of the top. After running a few minutes the machine may be stopped and the cover removed; the chips will be found to be nearly free from oil. They may then be thrown away and the operation repeated.

CUTTING AND FITTING SHEET LAGGING.

29. Many steam-engine cylinders are covered with sheet-steel or Russia-iron lagging. This lagging, when possible, is cut to the right dimensions and rolled into a cylindrical form; or it is sheared to the proper dimensions, if the cylinder is to be lagged square. There still remains a great deal of fitting on the sheet, or sheets, which is generally done by hand but which may be done on a machine similar to that illustrated in Fig. 1 (*a*). This machine has a column *a* that carries a table *b*. A movable slide *c* working in guides formed on the column carries a cutter *d*, which is attached to the slide by the clamp *e*. The guide bar *f* has a slot in its front side in which the cutter *d*

slides; it is held in position by a screw and a hand wheel *g*. The machine is driven by means of the belt *h*, and an up-and-down motion is imparted to the cutter *d* by means of the crank *i* and rod *j*. Fig. 1 (*b*) is a detail of the square cutter used, in which *k* is the cutting edge. The sheets to

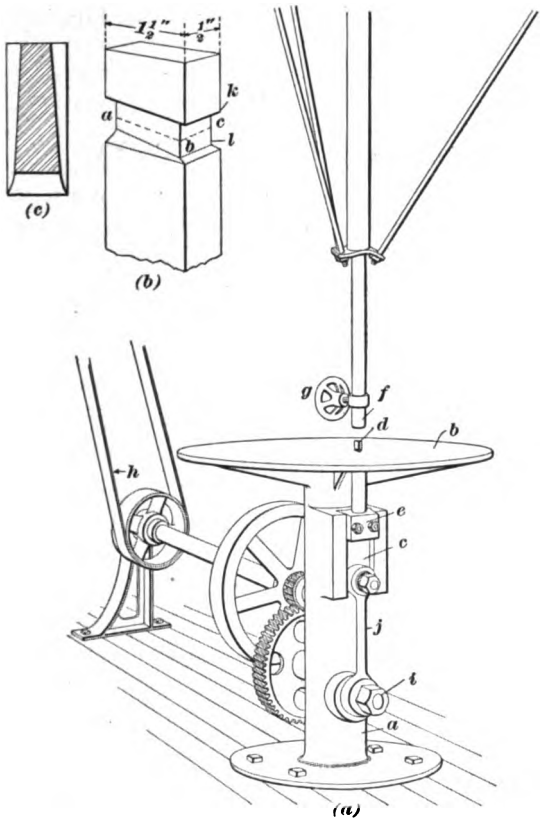

FIG. 1.

be cut are laid on the table and pushed into the notch *l*; the cutter then shears out a chip on the down stroke. Fig. 1 (*c*) shows a section of the cutter in the plane indicated by the lines *a*, *b*, *c*, Fig. 1 (*b*). Cutters of any section may be made for following curved lines as well as straight lines.

30. The lagging sheets are worked out on this machine to nearly the right form and the remainder of the fitting is done by hand. The screw holes in the sheets are generally drilled in a power-driven machine. Finally, the sheet is clamped in place while the holes are marked off on the cylinder or lagging frame; these are then drilled into the supporting surfaces on the cylinder or the lagging frame.

HEAT INSULATION.

31. Cylinders of steam engines and main steam connections need to be as thoroughly protected from the cold as possible, in order that the condensation of steam may be reduced to the lowest point. For this purpose the cylinder is often coated with a cement, or mortar, composed largely of asbestos. This is mixed, tempered, and applied to the cylinder in much the same manner that mortar is put on by a mason. The work is done after the supports for the lagging are in place, and the material is applied in such thickness as not to interfere with the lagging. The cylinders are generally heated by steam when this work is done, so as to dry the material.

32. Steam pipes for conveying live steam are protected in a variety of ways. Sometimes the pipe is surrounded with wire netting of about $\frac{3}{8}$-inch mesh, which is held some distance away from the pipe by distance pieces that are fastened to the wire netting and butt against the pipe. Non-conducting mortar is applied to this netting and pressed in on the pipe; when the pipe is outdoors, it is usually boxed in order to further protect it. If the pipe is indoors, it is often lagged to match the cylinder. Several kinds of sectional covering are made that are easily applied to such pipes, and are held in place by clamps or straps.

The object of jacketing or covering cylinders and pipes in this manner is to retain the heat, except in refrigerating machinery, where the object is to keep out the heat.

PAINTING MACHINE TOOLS.

33. Most machine tools are finished by giving them a coat of paint. The surfaces of the castings are cleaned first in the foundry scratch room, and any remaining dirt or irregularities and unevennesses of joined parts is removed during erection by chipping and filing so far as may be necessary to make a good surface. The shop painter next goes over the surfaces with a filler, which is a kind of thick, heavy paint, very adhesive and quick-drying. It is applied with a putty knife, as it is about as thick as very soft putty or freshly opened white lead. This filler hardens rapidly when exposed to the air. The filled surfaces are then smoothed by wetting and rubbing them with a piece of grindstone or a piece of a broken emery wheel, or by simply rubbing them with coarse sandpaper. When the smoothing has been finished, one or two coats of paint having the desired color are applied. Green paint is preferred by some builders and shop superintendents, as it gives a lighter appearance to the shop than black paint. Green and even lighter paints are much used for machine tools, and if the painted surfaces are covered with a varnish that will resist oils, they are easily kept clean and the general appearance of the shop is thus much improved. Steel-gray metallic paint is a favorite paint with many builders on account of the handsome appearance it gives to the machines.

MACHINISTS' INDICATORS.

THE BATH INDICATOR.

34. The **Bath Indicator** is a tool that is especially adapted to lathe work, for if the work is out of true it will indicate the error in thousandths of an inch and fractions thereof. A sectional view of this indicator is shown in Fig. 2. It consists of two parts, which are the adjustable

head *a* that carries the multiplying mechanism, and the shank *b* for holding the indicator in the tool post. The indicator has a removable plug *c*, which can be screwed into

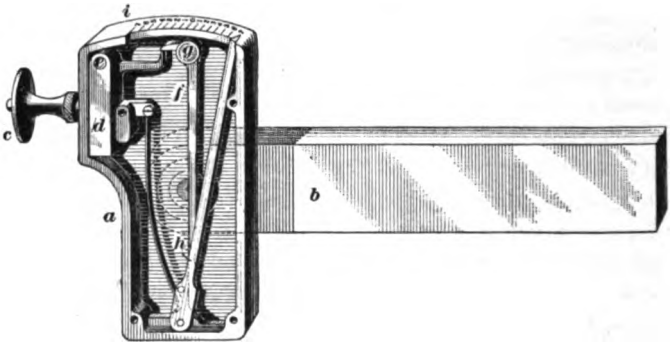

FIG. 2.

either one of two holes that are drilled and tapped into the lever *d*. This lever is fulcrumed at *e*, and has an arm the end of which engages the short arm of the bell-crank *f*

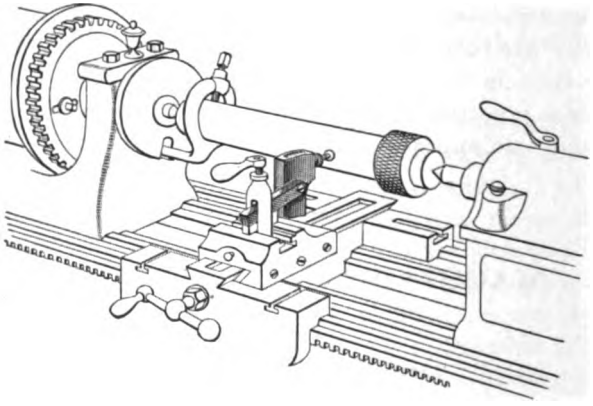

FIG. 3.

that is fulcrumed at *g*. The long arm of the bell-crank *f* engages a pin placed near the fulcrum of the indicating lever *h*, whose end in moving past a graduated scale *i* shows

any movement of the plug *c* to an enlarged scale. The levers are so proportioned that a movement of $\frac{1}{1000}$ inch of the plug *c* will cause the end of the lever *h* to move through an arc that is $\frac{1}{12}$ inch long when the plug is screwed into the hole farthest from the fulcrum *c*. By screwing the plug into the other hole, the sensitiveness of the indicator is doubled; that is, a movement of the plug of $\frac{1}{1000}$ inch will cause the end *h* to move through an arc having a length of $\frac{1}{8}$ inch. The manufacturers of this indicator furnish a number of differently shaped plugs to suit individual preferences and to suit various classes of work.

35. Fig. 3 shows how this indicator may be applied to work driven between the centers of a lathe in order to test its truth. The indicator is held in the tool post; the cross-slide is then fed forwards until the plug touches the work. When the latter revolves, the indicating lever shows how much, if any, the work is out of true.

36. In order to adapt this indicator for testing the coincidence of center-punch marks with the axis of rotation of the live spindle, the device shown in Fig. 4 is employed. This consists of a cylindrical piece of steel pointed at one end. The other end is hollow, and has a plug with a center in the end nicely fitted to it. This plug is free to slide axially a small amount, and is acted on by a helical spring. In use, the pointed end of the device is placed into the center-punch mark of the work, and the other end is placed on the tailstock center. The tailstock center is now screwed in sufficiently to slightly compress the spring. Now, if the work is revolved, the device will obviously move in a conical path, if the center-punch mark of the work does not coincide with the axis of revolution, and this movement is indicated if the plug of the indicator is placed against the centering device. As

FIG. 4.

the movement will be greatest at the work, the indicator should be applied to the centering device as near to the work as circumstances will permit.

TEST INDICATOR.

37. The Brown & Sharpe Manufacturing Company make the indicator shown in Fig. 5, which is not only useful in the erection and inspection of machine tools, but also has a wide range of usefulness for general work. It is possible by its use to readily determine the degree of inaccuracy of a plane surface on the top, bottom, or side of a piece of work, or to easily ascertain the amount of end movement, for example, of a spindle, or the extent to which a spindle may run out of true.

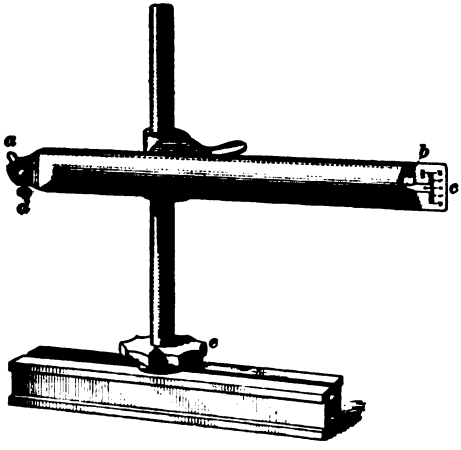

FIG. 5.

The upright post, or stand, may be clamped at any point on the base by the nurled nut *c*. The sleeve that carries the arm may be fastened at any height on the post, or may be turned around the post to bring the arm on either side. The arm turns in the sleeve and may be set at any angle relative to the base, or it may be inverted so that the point *a*, which is brought in contact with the work, will point downwards. The movement of this point is magnified a number of times owing to the fact that the length of the arm *b* of the index finger is much greater than the length of the arm in contact with the work; its movement may be read

on the graduations *c*. The index finger *a* may be adjusted and brought to zero by the nurled screw *d*, irrespective of the position of the arm.

THE RAM.

38. It is sometimes necessary when taking old machinery apart, as, for instance, when trying to remove an old shaft from a wheel or crank, to strike the heaviest blow possible. The heavy blow carries the object struck before it, while lighter blows will simply upset the end of the piece and thus rivet it into place. When heavy sledge hammers are used for light work, the surfaces hammered on should be protected by a piece of Babbitt metal or copper held or laid on the surface struck.

39. Where heavier blows are required than can be struck with a sledge, a **ram** is used. This is a long bar of iron suspended at its center of gravity, in order that it may hang in a horizontal position, and hung in front of the piece to be rammed. The rope suspending the ram is made fast to an overhead point, after which the operators draw the bar, or ram, backwards as far as possible, and then run with it toward the piece to be struck. The ram is often used when a hydraulic press is not available or would be unfit for the work. Care should be taken in using the ram not to upset the face of the part that is being rammed, which will only tighten the parts in their places.

Since several men are required to operate a heavy ram, ramming is an expensive operation that should not be resorted to if a press can be used.

THE SODA KETTLE.

40. All shops have more or less work that must be cleaned so as to be free from grease. This is often a troublesome task, requiring much time and waste to perform it

well; the greater the irregularity of the pieces, the more trouble there is experienced in cleaning them.

A very convenient method of quickly and easily cleaning small parts of machines, tools, or machined parts is to wash them in hot soda water. The most convenient receptacle for this mixture is known in the shop as a **soda kettle.** This is often a shop-made affair, but embodies the main features of the kettle illustrated in Fig. 6. This soda kettle, which is built by a well-known tool builder, consists of a cast-iron kettle *a* containing a coil of steam pipe for heating the soda water. Live steam enters the kettle when the globe valve *b* is opened, and the exhaust steam leaves through the pipe *c*, which is provided with a globe valve. A by-pass pipe *d* having a globe valve is connected to the exhaust pipe; if the globe valve in the exhaust pipe is closed and the valve in the by-pass pipe is opened, the pressure of the live steam will force the water of condensation in the bottom of the coil into the kettle. A drain cock *e* is used for emptying the kettle.

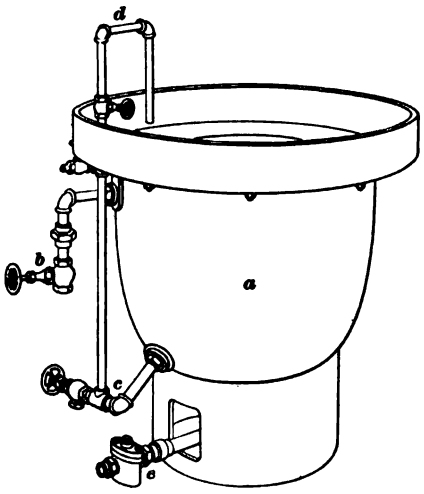

FIG. 6.

41. In use, the kettle is filled about three-fourths full of clean water to which is added about $\frac{1}{20}$ the volume of sal soda; the mixture is then heated as hot as the coil will heat it. A wire basket, or an iron pail or bucket having the bottom punched full of holes, is provided for holding small pieces while dipping them into the soda mixture. Suitable hooks made of small iron rod may be used to dip single pieces into the kettle. A pair of pick-up tongs and one or

two hooks should be kept near the kettle, since pieces are sometimes dropped into it and must be fished out. Work covered with soft grease or oil and chips is cleaned by putting it into the basket, which is then dipped into the hot water. Work that may be covered with oil that has dried on it often has to be soaked in the solution for some time, and a part of the dried oil then has to be scraped off; the work is now given a further soaking, which is generally sufficient to remove the rest of the dried oil. Work cleaned in the hot soda water dries quickly and will not rust.

COMPRESSED AIR FOR CLEANING.

42. In shops having a compressed-air service, a $\frac{1}{2}$-inch rubber hose with a $\frac{3}{8}$-inch nozzle attached to it forms a convenient means of cleaning many pieces of work that are so shaped that it is difficult to reach every part with the hand. The blast is simply turned on the piece to be cleaned, and most, if not all, of the loose dirt is blown off. An air hose will be found very useful in the tool room for cleaning the shelves, racks, and drawers, and may even be used advantageously for a rapid cleaning of some tools. The disadvantage of the air blast lies in the fact that it scatters the dirt all over the vicinity.

BOXES, PANS, AND TRAYS.

43. All shops and manufacturing establishments doing small work have more or less trouble in moving small parts from place to place. This is generally done by using such boxes, kegs, and barrels as happen to be at hand. These soon become dirty or are broken and must then be replaced.

44. An excellent substitute for these makeshift devices is found in the metallic articles illustrated in Fig. 7. The one shown in Fig. 7 (*a*) is a steel box that can be used instead of a wooden one for many shop purposes. The pressed-steel pan illustrated in Fig. 7 (*b*) may be used instead of the box, and has the advantage that it will hold water or oil. These pans, when not in use, may be stacked up, so as to occupy very little space.

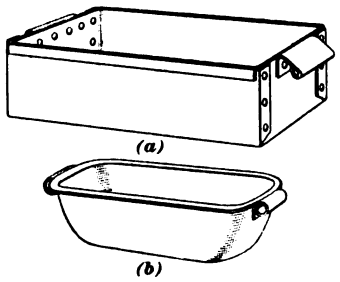

FIG. 7.

45. Another useful and cleanly device is the **tray rack** illustrated in Fig. 8. It consists of three iron trays, the upper one of which carries a drawer. For shop use, casters are added so that it may be moved from place to place. It is especially useful where a number of operations have to be performed on pieces by different machines. The trays may be used by the machine-tool man to hold both his tools and work, while the drawer may contain his individual tools.

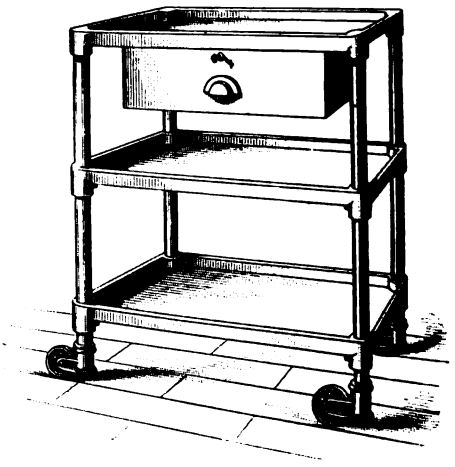

FIG. 8.

PICKLING SOLUTIONS.

46. The surfaces of castings, drop forgings, and many of the materials used in the construction of machinery require cleaning or preparation before they can be used.

Much of this cleaning is done by pickling the work in such mixtures as, by experiment, have been found to be most effective. Several of these solutions are given below, and the user can, by experiment, determine which of these is best adapted to his needs.

Oil of vitriol, or sulphuric acid, is one of the most common acids used for pickling. It is generally transported in glass carboys, which are securely boxed up. The acid is handled in small quantities around the works in glass, earthen, or lead vessels. It is used in the proportion of about 1 part of acid to 4 parts of water for cleaning sand and scale from iron castings, although some use a larger proportion of water.

47. The cleaning is generally done in what is called a **pickle bed,** which consists of a lead-lined trough for holding the solution. At one side of it is a sloping wooden platform, so that the solution will flow from it to the trough. The castings are piled upon this platform and the solution is poured over them with a ladle. They are allowed to lay over night; it will then be found that the acid has attacked the surface of the iron sufficiently to loosen the sand, much of which is washed away with water. The castings are further cleaned with wire brushes and old files.

48. Wrought iron that is badly scaled in forging may be cleaned with a solution of 1 part of sulphuric acid to 10 parts of water; after dipping, the work should be cleaned in hot lime water. Another, and in many respects, better, solution is composed of 1 part of hydrofluoric acid to 10 parts of water. This is kept in a wooden vat; the castings are immersed in it for 2 or 3 hours. Hydrofluoric acid does not, like sulphuric acid, attack iron, but, instead, attacks the sand directly and eats it, as well as the hard magnetic oxide (the scale). About half as much hydrofluoric acid is used as would be needed if sulphuric acid were used, and the work is done in about one-fourth the time. The pickling vat may be filled and used two or three times before adding more acid. Drop forgings are often covered with a thick, hard scale that may be removed by dipping them in this

mixture, then washing them in clear water. Care should be taken to keep this acid from the hands, as it burns severely in a few hours. If it is spilled upon the hands, they should be washed in water mixed with aqua ammonia, or with another alkali, in order to prevent injury.

49. Brass castings that require pickling are immersed in a mixture of 1 part of nitric acid to 5 parts of water and washed thoroughly after pickling.

KEEPING MACHINE-SHOP TOOLS.

50. Various methods are followed in caring for machine-shop tools. In the simplest method, the tools are thrown down where used and left there until they are wanted for another job, when they are hunted for until found, and are then cleaned and again made ready for use. This method is probably the worst that could possibly be devised and is a direct evidence of mismanagement. The modern and proper plan of caring for tools is to require all tools to be cleaned by the user, and to be returned to such a place as may be designated for their storage and care.

51. Tool rooms are built in most shops for the storage and care of all the tools used in the place, or, if the shop is divided into departments, each head of a department may have his own tool room and a man to care for it, who, in addition, also does such other work as he may have time for. The tool room may be used only as a storeroom for tools, or it may be equipped with such a varied selection of machine tools that any tool or appliance needed on the work may be made there, and tools and light machinery may be repaired. Large shops usually have, in addition to the tool room, such storerooms or vaults as may be needed for the storage of any large and valuable jigs, tools, or fixtures that are seldom needed, but that require protection from fire. Tools should be kept in such a manner that they may be gotten out and returned in the least time, and should also, while in their places, be as well protected from dust and rust as possible.

52. Drawers are extensively used for holding tools, and for many purposes they answer admirably. They are, however, very liable to be overloaded, which soon racks them to pieces. This may be avoided by making them extra heavy, or providing rollers for them to run upon. They may also be easily handled if the sliding surfaces are of hard wood or are metal-faced, and the contact surfaces greased occasionally with a good lubricating grease. Drawers are used to the best advantage for tools that are seldom needed, but require protection from injury and dirt.

53. Shelves or pigeonholes furnish the most ready means of keeping tools that are much used. These should be as shallow as possible in order that the tools may not be pushed in out of sight, and that they may be easily brushed out, or blown out if an air hose is used for cleaning. Cupboards containing numerous shelves are useful for special tools that are used less frequently than standard ones, since the cupboard doors protect them from dirt and the atmosphere.

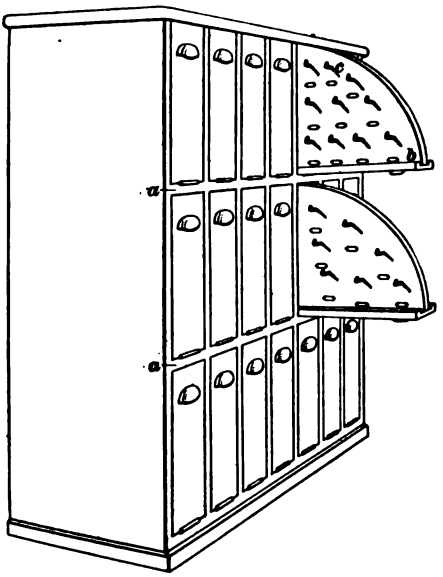

FIG. 9.

54. The walls of tool storerooms are often covered with boards, which should be painted and have hardwood pegs put into them on which to hang milling cutters and similar tools; in some cases, nails are used instead of the wooden pegs. A better method of keeping cutters is shown in Fig. 9, which consists of a cabinet having a series of shelves *a* to which swing boards *b*

are hinged. These boards are provided with hooks *c* on which to hang the cutters. This cabinet provides a clean, convenient, and space-economizing place for a large number of milling cutters and gear-cutters.

55. Racks of various kinds furnish a convenient and clean place for keeping a large class of tools, such as pipe stocks, wrenches, long taps, reamers, drills, boring bars, cutter bars, sockets, and other similar long tools, in such a manner that they are easily put away or gotten out, and are kept clean when in their places. A rack of this description is shown in Fig. 10. It consists of four uprights *a* that are braced by wrought-iron tie-bars *b*. These are held by long bolts *c*, which pass through the tie-bars *b* at each end, and are surrounded by distance pieces *d* made of iron pipe.

56. Racks that are constructed in the manner shown in Fig. 10 may be made 7 feet high and 3½ feet wide at the base, with the upright spaced at such distances as will accommodate the shortest tools that may be kept on them. Light and frequently used tools are piled on the arms, while less-used and heavier tools are placed on the cross-pieces *b*. These racks may stand against the wall, but are preferably placed on the floor where they can be reached from all sides. Racks of special design are usually provided for such tools as ratchets, tapping attachments, air drills, and other portable drilling and grinding fixtures. Boxes are sometimes used for storing tools, and when so used they should be plainly marked; a convenient record should also be kept of their exact contents.

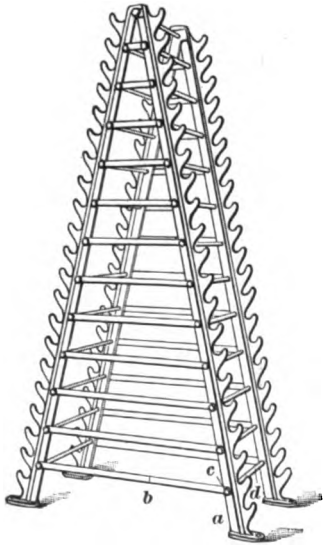

FIG. 10.

COST OF CONSTRUCTION.

57. The question of cost in constructing a machine or device is one of great importance in machine-shop operations, since the question of whether to build or not to build depends on it. It is an everyday occurrence for men to go to a machine shop and ask to have a part of a tool or a machine made, and to be told that the piece would cost more than the price paid for the whole tool or machine when it was new. The reason for the high price for the single piece lies in the fact that the maker of the machine or device had special tools for every operation and trained help to do the work, which was done in large lots, perhaps hundreds at a time, and could thus be produced very cheaply; but the man that is called on to make single parts, one at a time, either has to use such tools as he happens to have, or has to make special ones that will be of no use on any other work, and which must be paid for by the customer.

58. The cost of constructing the model of a typewriter, bicycle, sewing machine, or any similar piece of mechanism frequently runs up into thousands of dollars, since every part is made by hand; but, the manufactured article, where every part is made in large quantities on the interchangeable plan, and with special tools, fixtures, and workers, is built for a few dollars.

59. In foundry work the same condition exists. A customer wants some comparatively simple casting, weighing perhaps only a few pounds, that requires a special pattern to be made for it. Evidently the cost of the pattern must be included in the price charged for the casting. Then, though the value of the iron may be only ten cents or less, it may cost five or ten dollars to make the pattern for this small casting; and this must be paid for by the customer. As a matter of course, if a large number of castings are to be made from one pattern, the cost of the pattern is distributed among so many castings as to make the cost of each casting

quite low. For instance, it costs several thousand dollars to make the pattern for a stove, but the finished stove can be sold at a very low price on account of the large number of castings made from each pattern.

60. If only one machine or engine of a kind is to be built, the work must be done with such tools as are at hand and such other ordinary tools as may be bought or made on the premises; but, if a large number of the same kind of engine or machine are to be built, special tools can be provided for the different operations and the same operation can be performed on each piece in succession, thus saving the time which would be required for changing tools and machines if each separate piece were finished all over at one time. It should be kept in mind that it costs just about as much to rig up a machine or get it ready to perform an operation for a single piece as it does to do the same thing for a dozen or a hundred pieces; hence, wherever it can be done, the whole number of the same operations should be performed before making a change. This statement applies to all parts and all stages of the work, from starting on the rough forgings and castings to inspecting and painting.

TIME ELEMENT IN WORK.

61. Any one engaged in mechanical work, be he apprentice or journeyman, should always have the clock in mind. This statement does not refer to watching the clock for quitting time, which comes quickly enough to those really interested in their work, but to the time element in connection with the work. No doubt the principal object is to do the work right, but between two men, each doing it equally well, the one that completes the work in the shorter time is the better man, the one who should and generally will receive the higher wages, and the one who is least liable to be "laid off" when business is dull. It is well, therefore,

for a person to cultivate the habit of working as rapidly as the character of the work will permit, first making up his mind as to the time a piece of work should take, and then doing his best to shorten that time. Some think that they will first learn to do the work well regardless of time, and afterwards learn to do it quickly; but this plan is open to the practical objection that having once learned a rate of doing work it is hard for us to change that rate. While the quality of the work must always be the first consideration, the time element should never be disregarded. Thus, an apprentice may think, because his pay is small, that only a small amount of work should be expected of him, and, hence, may conclude that he will increase his speed when he becomes a journeyman or receives a higher compensation. He should consider, however, that the money that he receives is the smallest part of his compensation, and that the trade he is learning, the manual and mental training, and the experience that he is receiving form the greater part. Such a boy may learn to do a piece of work well, but is not likely to receive the highest rate of compensation when a journeyman, since his rate of speed generally remains abnormally low.

62. In performing a certain operation on a piece of work, or in fact in doing any kind of work, it must always be remembered that work, and, consequently, the value of the producer, is measured by two different standards, which are the *mechanical* and the *commercial* standards. The **mechanical standard** measures the degree of skill with which the work is executed and the excellence of the design; in other words, it is a measure of the quality of the work. The **commercial standard** takes account of the labor cost, and the person that reduces this factor to the lowest limit compatible with the degree of mechanical excellence that the nature and purpose of the work require, is the one that will, and properly should, receive a higher compensation for his services than the person that can do a good job only when he has an unlimited amount of time in which to do it.

63. An old proverb states that "what is worth doing at all is worth doing well." This proverb is applicable to many cases and conditions, but a blind adherence to it is liable to be a serious detriment to a person engaged in commercial work. For such a person the proverb might profitably be changed to read "what is worth doing at all is worth doing as well as the circumstances of each case require." That is, the quality of the workmanship should be suited to the purpose to which the work is to be put, and unnecessary refinements and ornamentation that neither add to appearance nor usefulness should be omitted.

THE SCRAP HEAP.

64. The final resting place of all the metallic appurtenances of the machine shop, smith shop, and boiler shop is the scrap heap. In this universal receptacle are found all kinds of metallic objects in all conditions, from the new special machine left on the builder's hands by some turn of fortune to that mass of metal so thickly coated with rust or grease that only a cold-chisel test will determine whether it is brass, steel, or lead. A scrap heap is a kind of shop barometer, telling in its own mute fashion of the general shop management of the place and of the use or misuse of materials in other places. A scrap heap represents employed capital, and for this reason it should be run through the cupola or furnace as soon as possible, and thus be reduced to available assets.

65. Many valuable lessons can be learned by an intelligent inspection of the various pieces to be found in a scrap heap. The undue weakness of component parts of machinery is here shown by the presence of the broken parts, and a careful inspection of the appearance of the breaks will not only show where the parts are in need of strengthening, but, also, whether the break was due to an abuse of the machine.

The presence of a large number of broken small tools of the same kind may safely be considered as an indication of a defect in their design, although in isolated cases, especially in shops where much unskilled labor is employed, it may indicate bad management on the part of some responsible person.

A SECTIONAL KEY.

66. In shrinking together two pieces that have key seats that must be in line with each other, a device known as a **sectional key** may be advantageously used for alining the pieces. One form of this device is shown in Fig. 11. Two tapered side keys *a* and *b*, having handles *a'* and *b'* of suitable length, are placed into the two key seats of the two parts that are being shrunk together; and when these parts are in place, a tapered centered key *c*, with a long handle *c'*, is then driven in between them, thus forcing the side keys against the sides of the key seats and alining them. When the work has cooled off, the device is removed, and the permanent key fitted and driven home.

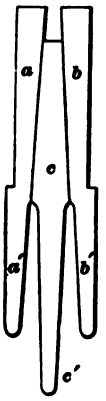

FIG. 11.

RIGGING.

LIST OF APPLIANCES.

67. For the handling of heavy pieces of machinery in the field, tools and appliances known by the general name of **rigging** are used. The appliances ordinarily required are the following:

1. The winding winch, or windlass, which is a machine so widely known as to need no description.

2. A set of different sized tackles, in which the rope, or line, should be long enough to reach the windlass or to allow

a number of men to grasp it when the blocks are the greatest required distance apart.

3. One or more screw jacks and hydraulic jacks are indispensable.

4. Slings or straps made of rope spliced together to form an endless rope.

5. Lashings, these being pieces of rope of different sizes and lengths, with the ends stopped up, by tying or binding, to prevent their unraveling.

6. Blocks of wood, rectangular in shape and of different sizes, and timber for the construction of derricks and gin poles.

7. Wedges, both of iron and of hard wood.

8. Crowbars and pinch bars.

9. Chains and chain hoists.

10. Rollers, which are generally short pieces of iron pipe.

The articles enumerated under the first, second, third, eighth, and ninth headings, can usually be bought cheaper and better than they can be made. Slings, lashings, blocks, wedges and rollers are rarely bought in the market, but are usually made.

PINCH BARS.

68. A rather convenient form of pinch bar that is well adapted for lifting and moving quite heavy weights, is shown

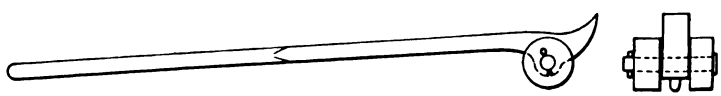

FIG. 12.

in Fig. 12. As will be seen by referring to the illustration, the bar is mounted upon two wheels, and, consequently, when the bar supports a heavy weight, the bar and weight can easily be shifted. This form of pinch bar is called a **cow bar.**

USE OF SLINGS.

69. Slings are used for attaching weights to the hook of a tackle. In order that a sling may best serve its purpose, one of several methods of fastening it to the block has to be chosen, the choice of method being influenced to some extent by the weight of the load to be lifted. For instance, the resistance of the sling is least if used single, as shown in Fig. 13 (*a*), but its greatest possible strength may be obtained by looping it over the hook as shown in Fig. 13 (*b*), thus increasing the surface of the sling in contact with the hook of the tackle block. The sling may be applied to the piece of work to be moved in the same manner in which it is fastened to the hook of the tackle block; that is, it may either be passed around singly, as in Fig. 13 (*a*), or doubled, as in Fig. 13 (*b*), the latter method being preferable owing to the absence of any danger from slipping of the sling. It is obvious that if the sling is fastened by doubling over, a noose is formed and the sling is thus tightened on the work when the free end is pulled; hence, the preference of riggers for this doubled-up application.

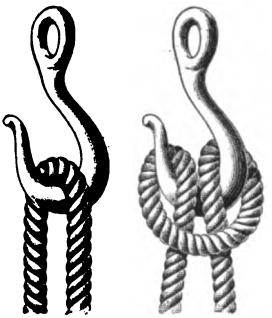

FIG. 13.

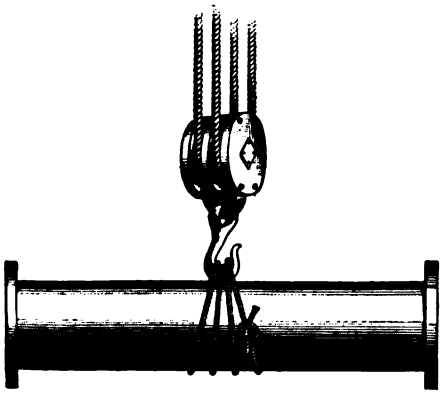

FIG. 14.

USE OF LASHINGS.

70. Where headroom is limited, the tackle may be attached to the work by means of lashing. A lashing is simply a piece of rope

sufficiently long to admit of its being passed several times around the piece to be moved. Work is fastened to the tackle by first bringing the back of the hook of the tackle block in contact with the piece to be hoisted, as shown in Fig. 14, and then passing several turns of the line around the work and over the hook, the ends of the line being fastened by a knot.

Another advantage of lashing lies in the fact that a small rope may be used; the necessary strength is then obtained by increasing the number of turns.

INSPECTING ROPES, SLINGS, AND LASHINGS.

71. There will come a time when, from repeated use and occasional abuse, the strength of ropes, slings, and lashings becomes impaired; in order to prevent any accident that may occur on account of this loss of the strength, it is necessary to know how to detect a weakened rope. The first thing to be done is to inspect the outside carefully, running over the lines from end to end, and noting if any of the strands, or yarns composing the strands, are damaged. If nothing wrong is discovered about the outside of the rope, the inside should be inspected, for the reason that a rope will often be perfectly sound on the outside, but utterly bad inside. The inside may be inspected by taking the rope in both hands and untwisting it sufficiently to expose the inner surfaces that have been chafing against one another. Then, if the life or utility of the line has been impaired by long use, a considerable number of broken fibers will be found; if in a bad state, they may have been reduced to powder. If broken fibers are discovered, the use of the rope should be confined to loads not heavier than half the load it formerly could stand; if a considerable quantity of powder be found, the line should be condemned at once as unfit for use.

72. Slings and lashings, as a general rule, are ruined by external chafing received when moving rough castings, etc., and, hence, their safety can be determined from their

external appearance. Ropes or lines, on the other hand, when used for tackle blocks, receive the greatest wear on the inside, owing to the chafing and grinding of the strands when passing over small pulleys under heavy strains.

CHAIN HOISTS.

73. Chain hoists, as a general rule, are best adapted to lifting heavy loads where the help available is scarce, since, owing to the way in which they are geared, they require very little power. One great advantage of chain hoists lies in the fact that they may be stopped at any point; that is, the load will remain in a state of rest, without securing the chain in any way, until set in motion again by the operator. With a tackle this cannot be done, since it is necessary to fasten the free end of the line to some stationary object in order to hold the load; this, of course, is often a drawback to the use of a tackle, and a great point in favor of the chain hoists. To offset this, we have the fact that after long usage, the chain becomes crystallized, and, hence, is liable to snap suddenly even under a light load. The effects of crystallization can, however, be remedied to a large extent by a thorough annealing of the chain. This can most readily be done by coiling the chain after removing it from the blocks, and then building a charcoal fire around it. This should be done in the open air; no blast must be applied to the fire. After the chain has been heated cherry red, it should be placed in an iron vessel, the bottom of which has been covered with powdered charcoal. Then cover the chain with the same substance, close the box, and allow the chain to remain in it until cold. It may then be rove through the blocks again, and will be nearly as good as new.

SPLICES.

74. Definitions.—Splicing is the operation of so joining two pieces of rope as to obtain one continuous piece with no appreciable increase of diameter at the splice.

There are several kinds of splices, but the principal ones are the **short splice,** the **long splice,** and the **eye splice.**

The principle of all splicing consists of joining, or **marrying,** the strands, thinning them out, and tapering them, so that the diameter at the splice is the same or only slightly greater than that of the rope itself. In the long splice, no increase in diameter is allowed.

75. Materials Used for Ropes.—Until comparatively recent years, all ropes were made of vegetable fiber teased out and spun into suitable form either by hand or machinery; but since the introduction into the rope-manufacturing industry of iron, and particularly of mild steel, steel rope is rapidly superseding all other kinds. For many purposes, however, fiber ropes are still used and can never be replaced by steel ones; they are made, for the most part, either of hemp, manila, or coir (cocoanut husk fiber). First, the fibers are spun into yarns, then the yarns into strands, and, finally, the strands into rope. The methods of splicing described and illustrated here apply only to these fiber ropes.

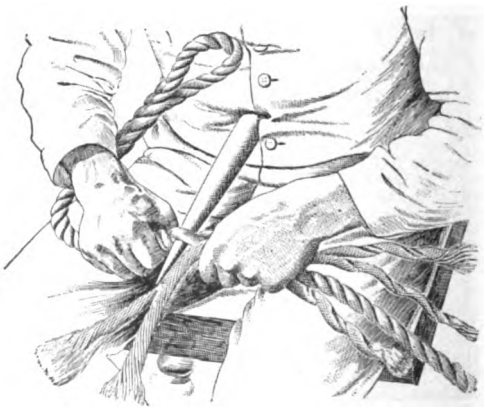

FIG. 15.

76. Instruments. — The only instruments necessary for making a splice are a **marlinspike** and a knife. The former is made of either iron or hard wood, is from 12 to

14 inches long, and about 1 inch in diameter at the thick end, the other end being sharpened to a blunt point about as shown in Fig. 15; it is always operated by the right hand, while the left encircles the rope. After pushing the point through the rope, between the strands that are to be separated, the thick end is placed against the body of the operator; then, using both hands, the rope is untwisted so as to render the work of opening the strands comparatively easy.

77. Making a Short Splice. — Unlay, that is, split open, the strands at the end of each rope for a distance about as shown in Fig. 16; this distance depends entirely on the diameter of the rope, but as the proportion will be the same for all diameters, the illustration serves as a general guide; be sure to unlay enough; a few inches too much is better than too little, as the ends have to be cut off anyway. Then, place the two ends together as shown at Fig. 16 (*a*), so that each strand lies between two strands of the other rope. Now, hold the strands *x*, *y*, *z* and the rope *A* in the left hand; if the ropes are too large to hold in this manner, fasten them together with twine; then take one of the strands, say *n*, and pass it over strand *y*, and having made an opening, either with the thumb or with a marlinspike in the manner illustrated in Fig. 15, push this strand *n* through *x* and pull it taut; this operation is known as **sticking.** Proceed similarly with strands *m* and *o*, passing each over the

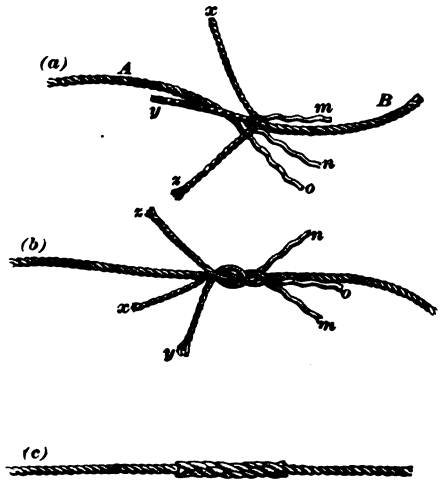

FIG. 16.

immediately adjoining strand and under the next one. Perform precisely the same operation with the strands of the other rope, passing each strand over the adjoining one and under the next, thus making the splice appear as at Fig. 16 (*b*). Now, in order to insure security and strength, this work must be repeated by passing each strand over the third and through under the fourth, then, after subjecting the splice to a good stout pull, cut off the ends of the strands, and the finished splice as shown at Fig. 16 (*c*) is obtained.

In slings and straps used for heavy work, the strands should be passed twice each way, and one-half of each strand should be **whipped,** or bound, with twine to one-half of the rest, thus preventing the strands from "creeping through" when the splice is taxed to the full capacity of the rope.

78. Making a Long Splice.—In the short splice, the diameter at the joint is rather greater than that of the rope, for which reason it is not a suitable splice where the rope is to be used in tackles and pulley blocks, or in places that will not admit anything larger than the rope itself. In such cases the long splice is used; when properly made, the untrained eye can hardly distinguish it from the rest of the rope. To make the long splice: Unlay the ends as before, but about three times as far, and place them together as shown at Fig. 17 (*a*), in the same manner as for the short splice. Then unlay one of the strands of the right-hand rope, say *x*, and in the groove thus made lay the strand of the left-hand rope, taking good care to give this strand the proper twist, so that it falls gracefully into the groove previously occupied by the strand *x*. Do likewise with the strands *y* and *m*, unlaying *y* gradually and in its place laying the strand *m*; the result is shown at Fig. 17 (*b*). Now, leaving the middle strands *p* and *g* in their original positions, cut off all the strands, as shown at (*b*); then relieve strands *n* and *x* of about one-third their yarns, and with what is left cast an overhand knot, exactly as shown; no other kind of

knot will do. Pull this knot taut and dispose of the ends, as in the short splice, by passing them over the adjoining strand and through under the next, cutting off a few yarns at each "stick." Proceed similarly with strands *p* and *g*, and *y* and *m*. The splice, when it is completed, appears

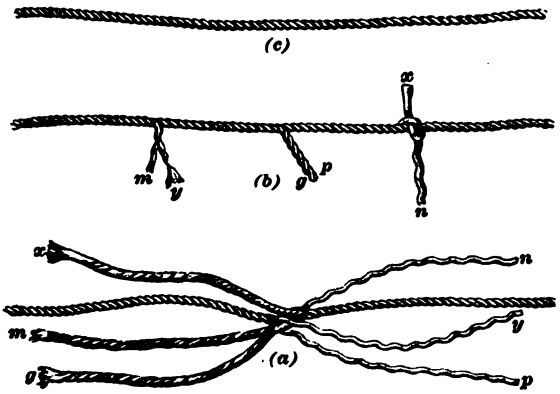

FIG. 17.

as at Fig. 17 (*c*). Sometimes the overhand knot is made without first thinning the strands, and then split and the half strand put through as described, but by doing so the surface of the splice is never as smooth as by the other method, which, for strength and neatness, is second to none.

79. Making an Eye Splice. — Another splice, and one that is as common and useful as the two already described, is the eye splice illustrated in Fig. 18. To begin this, unlay the end of the rope about as far as for the short splice, and bend into the required size of eye, as shown at (*a*). Then tuck the end of the middle strand *y* under one of the strands of the standing part—having previously made the necessary opening with the marlinspike—and pull tight, getting what is shown at (*b*). Now push the strand *x* from behind, and under the strand on the standing part next above that under which the middle strand *y* was passed, so that it will come out where *y* went in, getting what is shown at (*c*); then pass the third strand *z* under the remaining free

strand in the standing part, next to the one under which *y* was passed, getting (*d*). Now pull the strands taut, and from each cut out one-third of the yarns, and tuck each one

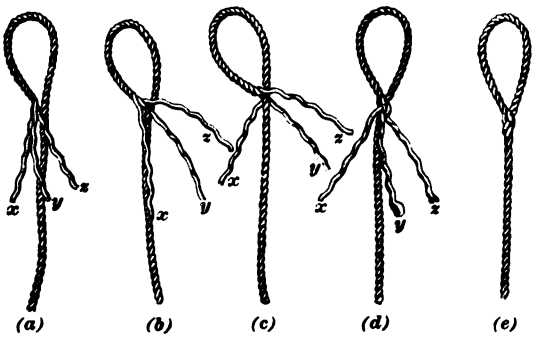

FIG. 18.

under its corresponding strand twice more; give it a good stretching, cut off the ends, and thus complete the splice, as shown at (*e*).

KNOTS, BENDS, AND HITCHES.

80. In Fig. 19 are illustrated a few methods of making knots and bends, applying slings and ropes to hooks, barrels, etc., and a few other wrinkles useful to those engaged in workshops. Should a rope be too long for some temporary purpose, do not cut it, but arrange it as at (*a*); if several bights are laid up to shorten the rope to the required length, pass the standing part through and over the ends of all, and pull tight. At (*c*) is shown how a sling or strap should be applied to a hook when the rope spreads away to its load; this hitch will prevent the sling from slipping in the hook, in case the load should come in contact with some obstruction while being hoisted. At (*b*) and (*d*) is shown how a smaller rope should be secured to one of greater diameter. The **Blackwall hitch** is illustrated at (*c*); except for very light loads, this should be made with the end twice around the hook (called a **double hitch**), as in the figure;

experience has proved that this is the safest way, since with only one turn, the end is liable to "creep" when subjected

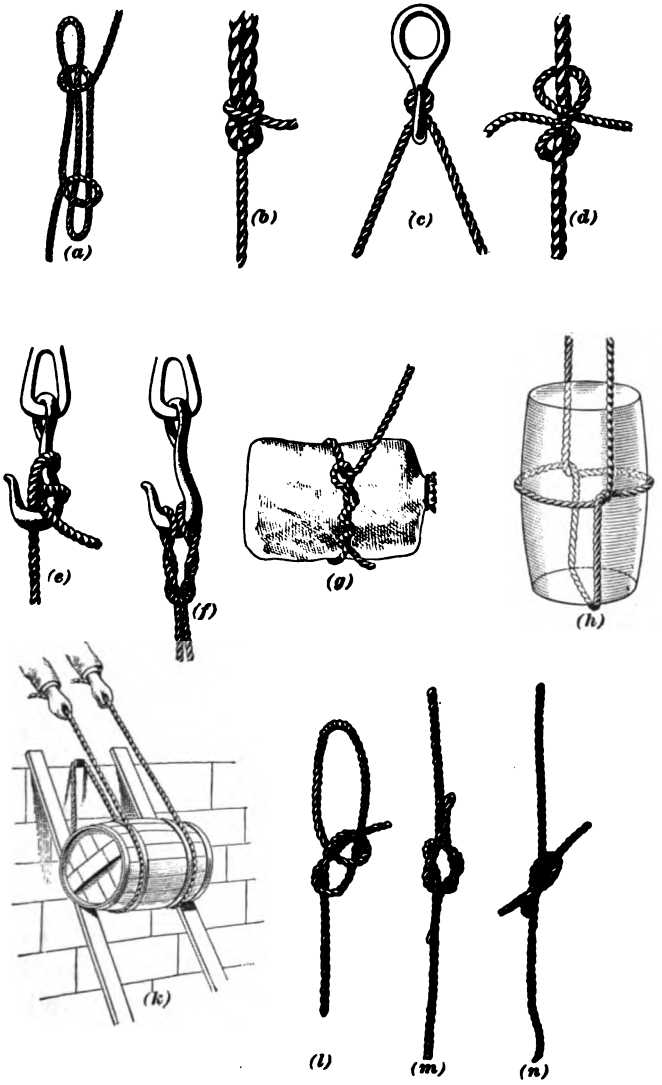

FIG. 19.

to a heavy pull, especially in damp weather, when the moisture absorbed by the rope serves as a lubricant. When

a rope is too long to conveniently secure its end to a tackle, a bight of it twisted as at (*f*) is very handy and useful; to make this hitch, commonly called a **cat's paw,** take hold of the rope with both hands at places about 2 feet apart and twist it two or three times each way; then apply the ends of the loops thus made to the hook; the twisting prevents the rope from becoming jammed, and the hitch is very easily undone. At (*g*) is shown a **timber hitch,** so simple that explanations are unnecessary. At (*h*) is shown how to apply a rope to a barrel or similar vessel when, for some reason, it is desired to hoist it in a vertical position. At (*k*) is shown what is known as a **parbuckle;** this hitch is used for raising a heavy cask or similar load with a single length of rope.

81. A very useful knot that should be mastered by every mechanic, and by all persons in any way connected with shipping, is shown at (*l*); by seamen, this is known as the **bowline knot.** To make it, take the end of the rope in the right hand and the standing part in the left; lay the end over the standing part, then, with the left hand, turn over the end a **bight** (a loop or turn) in the standing part, pass the end over and around the standing part, and through the bight again, thus completing the knot; all this is shown with perfect clearness in the illustration. Probably the commonest knot used for tying two ropes together is the **square knot** shown at (*m*). This should always be made in the manner shown, and never as shown at (*n*).

ERECTION OF A DERRICK.

82. A common form of derrick is shown in Fig. 20. It consists of a **mast** *a*, the lower end of which is set into a **base** *b* that is secured to the timber framing *c* shown in the illustration. The upper end of the mast carries the so-called **derrick head** *d*, to which the **guy ropes** *e*, *f*, *g*, and *h* are fastened. These guy ropes are fastened to stakes driven into the ground, or to any other immovable objects

that are conveniently located, and serve to steady the mast. The mast has pivots at both ends that enter sockets in the base and in the derrick head, and allow the mast to be

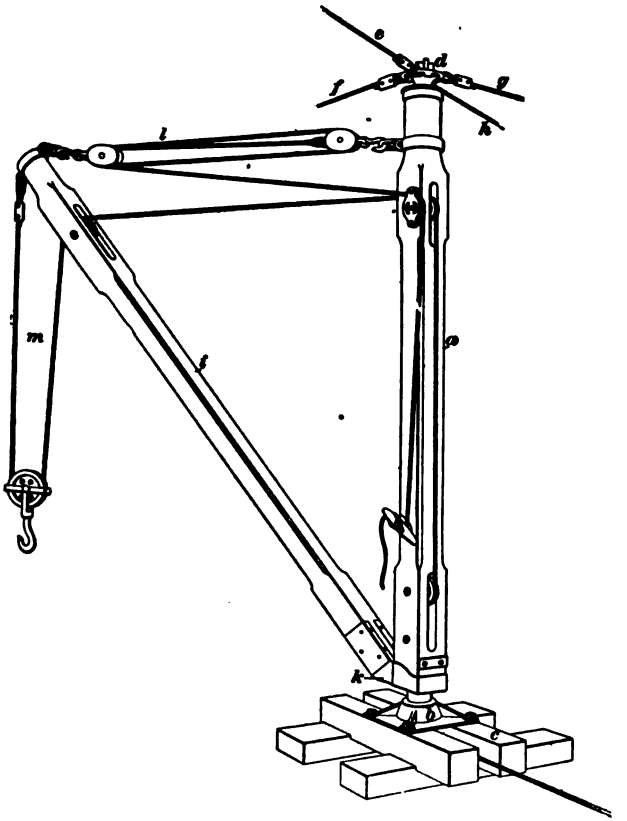

FIG. 20.

rotated. The **boom** *i* is hinged to the **knee** *k*, and can be swung about its fulcrum by the **tackle** *l*. The tackle *m* is used for hoisting weights.

83. When the mast alone is used in hoisting, i. e., when no boom is furnished, the mast is called a **gin pole.** When the upper end of the mast and boom are tied together by a tie-bar, the whole device is called a **crane.**

84. Erecting the Gin Pole.—When it is desired to erect a tall derrick, it will generally be necessary to put up a gin pole first to assist in raising the mast, but if the derrick is low, its boom may be used for this purpose. To erect the gin pole, in one method a bar of iron *a* is slipped through the hole at the lower end of the gin pole *b* and is secured to suitable stakes *c*, as shown in Fig. 21. The free end of the gin pole is then lifted from the ground and placed upon a horse; the X-shaped brace *e* is now slipped under it. The guys *f*, *g*, *h*, and *i* are then attached

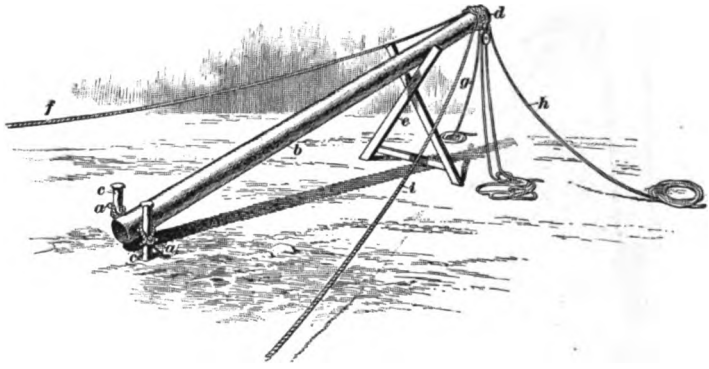

FIG. 21.

to the upper end *d* of the gin pole and are laid out on the ground ready for use. The men now raise the gin pole *b* by means of pike poles and advance the support *e* toward the lower end. When the free end has been raised some distance from the ground, men may pull on the ropes *f* and *i*, and thus raise the gin pole to a vertical position; at the same time, the men who attend to the guys *g* and *h* must see that it does not shift from the desired position. Usually only one man is required for each end of the guys *g* and *h*, since he can wind the rope about a stake, and then easily prevent the gin pole from moving too rapidly.

85. Erecting the Mast.—After the gin pole has been raised into an upright position and the guys have been fastened, it may be used for lifting the mast, as is shown in Fig. 22, in which *a* represents the gin pole, the lower end

of which is lashed to the stakes *c*. The base for the derrick having been located and fastened to the timbers *b*, *b*, the

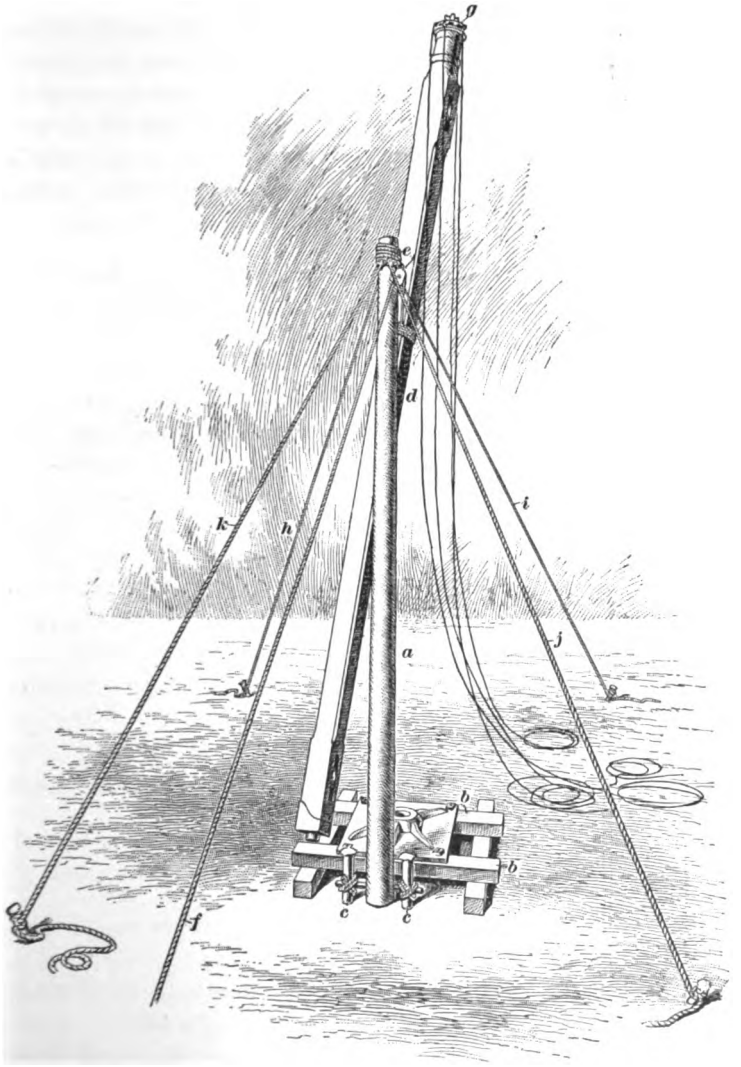

FIG. 22.

mast *d* is hoisted into position by means of a rope fastened to the mast a little above its center and passed over the

pullcy *e* on the end of the gin pole. The other end of this rope *f* may be handled by hand if the mast is not too heavy, or by a suitably located winch or crab if the mast is of considerable weight. The derrick head *g* should be placed in position and the guys attached before the mast is raised. The lower end of the mast is now lowered into the base, after which the guys attached to the head *g* are tightened and are fastened in position. The temporary guys *h*, *i*, *j*, and *k* for the gin pole are usually of manila or hemp rope, while the permanent guys for the mast are made of wire rope.

86. Placing the Boom.—After the mast has been properly guyed and the gin pole has been taken down, a hoisting rope is passed over the pulleys at the top of the mast; a hitch is then made around the boom and it is raised until the bottom end can be swung into the knee, where it is secured by its pin. The ropes are then all reeved through their proper pulleys and the derrick is ready for work.

87. Large derricks are generally erected by the aid of a separate gin pole, as just described. In the case of a very large derrick it is sometimes necessary to erect a gin pole of a height such that the men can handle it, and use this for setting the boom on end, which is then used as a gin pole for lifting the mast. In some cases two separate sticks of timber are used as gin poles, a short one, less than one-half the height of the mast, being used to set a gin pole about two-thirds the height of the mast; this second gin pole is then employed for setting both the mast and the boom. Derricks so large as to require two gin poles for their erection are rarely used except on permanent work.

88. Erecting a Small Derrick. — With small derricks, it is rarely necessary to use a gin pole for raising the mast, as the boom is generally light enough to be erected as a gin pole, and is then used for raising the mast. After the mast has been raised and securely guyed, the mast itself is used for swinging the boom, which up to this time has served as a gin pole, into position.

89. Dismantling the Derrick.—When the work has been finished and it becomes necessary to dismantle the derrick, the boom is hoisted up to the mast, and is detached from the knee. Stakes are then driven into the ground and the lower end of the boom is lashed to them; the boom is then used as a gin pole for lowering the mast. The boom itself is lowered afterwards by paying out two of its temporary guys until it can be caught upon a support similar to that shown at *e*, Fig. 21.

USEFUL INFORMATION AND RECEIPTS.

90. Putting in Wood Screws.—The machinist is sometimes obliged to put in wood screws. These can be screwed home easier if they are rubbed with, or stuck into, a cake of tallow, while in the absence of tallow any heavy grease or oil may be used. Screws that are thus lubricated may be easily taken out again. Wood screws may be put into the hardest wood by the following process: A screw of the size to be used is filed or ground to the form of a half-round bit, thus making a tap of it. A hole, equal in diameter to the size of the screw at the bottom of the thread, is drilled or bored into the wood and the half-round tap is screwed in. This cuts a good thread into which the screw, which should be well greased, may be easily screwed.

91. Cutting Soft Rubber.—Soft rubber is very hard to cut smoothly, even when the knife is very sharp. It can be cut quite easily, however, if the knife, which must be *sharp*, is dipped frequently into water, or wet with saliva.

92. Working Vulcanized Rubber. — Vulcanized rubber, which is more frequently called **hard rubber,** is a material that it is hard to machine smoothly on account of the fact that it dulls the tool very rapidly. The tool used for turning or planing it may be a little keener than that

used for steel, and should be left just as hard as fire and water can make it. Hard rubber can be machined to the best advantage with a diamond-tipped tool. Vulcanized rubber will take a high finish, which is obtained by buffing it on an ordinary buffing wheel.

93. Turpentine as a Lubricant.—It is sometimes necessary for fitters who are working on cast-iron work to use a lubricant, other than the marking material, when they are rubbing two parts together in order to obtain bearing marks. Oil will prevent the seizing and cutting of the surfaces, but it will leave no bearing marks, and, besides, it will interfere with the scraping. Turpentine may be used freely on such work, however, instead of oil, and will prove beneficial rather than otherwise.

94. Bluing Iron and Steel. — Polished work made of iron or steel may be given a beautiful blue color by heating it in hot sand, in wood ashes, or in pulverized charcoal. The substance in which the article is to be blued may be put into an iron kettle that is placed over a fire. The substance must be constantly stirred while it is being heated in order that the whole of it may be brought to an even temperature. The article or articles to be blued must be absolutely free from grease if an even color is desired; they may be placed into a wire basket or may be suspended by wires and then immersed in the heated substance until the desired color is obtained. A light-blue color can be obtained by heating in sand or wood ashes, but a dark-blue color requires the article to be heated in pulverized charcoal. The brightness of the color depends largely on the finish; the higher the polish upon the work, the more brilliant the color which will be obtained. The substance in which the heating is done should be just hot enough to char a dry pine stick. By this manner of bluing, a piece of work having thick and thin parts can be given an even color all over.

95. Blacking Iron and Steel.—Polished articles of iron and steel can be given a deep, lustrous black color by

immersing them into a heated mixture composed of 1 part of black oxide of manganese and 10 parts of saltpeter, by weight. This mixture should be heated in an iron kettle until it is hot enough to char a pine stick. The articles to be blackened must be scrupulously clean; the excellence of the color will depend on the degree of finish of the work.

When bluing or blacking articles in a heated substance, it must be remembered that the articles will themselves become heated, and that if they are hardened, the temper will be drawn.

96. Browning Iron and Steel Chemically.—Many articles of iron and steel can be given a color varying from a light brown to a deep black by a chemical treatment. For this purpose a solution composed of 1 part of corrosive sublimate dissolved in a mixture of 16 parts of sweet spirits of niter and 16 parts of alcohol, by weight, is used. The article to be browned is cleaned thoroughly, so as to be free from grease, and is then washed with wet lime, and, finally, rubbed down with dry lime, in order to eliminate all traces of grease, as the success of the treatment depends on it. Care must also be taken not to touch the article with the fingers after it has been cleaned, by fitting wooden handles to it by which it can be held. The article having been cleaned, the browning solution is applied with a sponge and the article is put in a dark, dry place until a dry rust has formed on it. This will take from 8 to 48 hours, depending upon the condition of the weather and the hardness of the material. When the rust has become dry enough to fly when a file card is applied to it, the article is carded off with a card that must be absolutely free from grease; it will now be found to have a light-yellow color. Another coat of the browning solution is now applied and after the dry rust has formed, the article is again carded off, when it will be found to have a dark-yellow color. The next repetition of the process will give it a light-brown color, then a dark-brown, and, finally, a deep-brown. The deep-brown color is changed to a black color by immersing the article in boiling water for a few

minutes. After the article has dried, and while still hot, it should be given a coat of oil and be allowed to cool slowly.

97. A more lasting black color can be obtained if the article is put into an oven that is heated by steam to a temperature of 300° F., keeping the article there for about 8 hours. Instead of the file card, a rotary steel-wire brush may be used to advantage when much browning is to be done. The barrels of firearms are browned by the process just described, or by modifications of it.

TOOLMAKING.

(PART 1.)

GENERAL TOOL-ROOM WORK.

INTRODUCTION.

1. Definition.—Toolmaking may, in general, be defined as the making of tools. A **tool** in its broadest sense may be any device, instrument, appliance, machine, or apparatus that is intended to perform some essential function in the production or transformation of raw material into a finished product or that aids in the performance of some function required for the change.

Custom, however, has narrowed this definition until the term *toolmaking* now comprises only the production of tools by the aid of which the integral parts of devices, instruments, appliances, machines, or apparatus can be formed through cutting, drawing, compressing, or abrading operations performed on bodies susceptible to these operations. The most important subdivision of toolmaking relates to the production of tools for the working of metals, and is the one that will be treated of here.

METHOD OF PROCEDURE.

2. There are several stages in the production of tools; it is rather difficult, however, to draw a distinct line of demarkation between the ending of one stage and the beginning of the other, since they frequently blend more or less together, according to the circumstances of each

Copyright, 1901, by THE COLLIERY ENGINEER COMPANY.
Entered at Stationers' Hall, London.
All rights reserved.

individual case. Generally speaking, these stages are as follows: *conception; commercial consideration; design;* and, finally, *construction.* The stages follow in the order named.

3. Conception of the Possibility of Improvement.—This may be considered as the foundation of progress. Ability to conceive possibilities requires not only intimate knowledge of every stage of the particular process or operation under consideration, but also full knowledge of the good points, defects, capabilities, and limitations of the tools used for this process or operation.

4. Study of the Commercial Considerations.—Will the improvement pay? This question must be asked in each and every case, and must have been answered in the affirmative before any further step is taken. Naturally, each case must be investigated by itself and decided upon its own merits. First of all, the probable cost of improvement must be estimated; the saving that the improvement will effect must then be carefully investigated. Finally, it must be determined if the ratio that the saving bears to the investment required to effect it is sufficient to warrant the expenditure. It is always to be remembered that the primary object of tool improvement is the lessening of the cost of production, or the analogous object of raising the quality of the output without increasing the selling price.

5. Design.—Since the cost of a tool depends largely on its design, and since the latter also directly determines its ultimate value, it will be apparent that the design is a very important matter. It must always be remembered that there are usually quite a number of different ways in which an object can be accomplished; then, in order that the first cost of a tool shall be within reasonable limits, it is necessary to carefully study the facilities at command. This consideration shows the importance of a thorough knowledge of tool-room operations, appliances, and special processes. For this reason, in the majority of manufacturing establishments, the design of special tools is left entirely to the toolmaker or to special designers.

When designing a tool, various ways of accomplishing the object sought will present themselves successively; unless special considerations prevent it, the design that will accomplish the object in the most direct manner is the one to be chosen. A good tool designer will never introduce complicated mechanical movements or such special modifications of relatively simple ones as are not only expensive to produce but difficult to keep in proper alignment. Simplicity, accessibility, compactness, rigidity, durability, and handiness are the prime factors requisite in a successful tool, whether it be a boring machine for boring the largest sizes of steam-engine cylinders, or a box tool for a small automatic screw machine.

6. Construction.—In the construction of tools, the toolmaker is very frequently called on to solve problems that, while not essentially different from those of the machinist, still require entirely different methods of procedure to accomplish the object sought. Thus, the problem of locating and drilling a couple of bolt holes 3 inches apart, when the bolts have a clearance of $\frac{1}{16}$ inch or more, is solved in an entirely different manner from that of producing two holes with their axes parallel and in the same plane, and 3 inches apart, within a limit of variation not to exceed $\frac{1}{1000}$ inch. In the first case, the combination of a drill press, center punch, hammer, two-foot rule, a drill, and a laborer will usually be sufficient; in the second case, an accurate lathe kept in the best of condition, fine measuring tools, standard test gauges, an extremely sensitive indicator, and other special appliances used by a highly skilled toolmaker, will be needed to locate the holes within the given limit of variation.

In the construction of a tool, the purpose of every part of it must be taken into consideration in order to prevent undue accuracy and unnecessary expense consequent thereto. It is a mistake to accurately machine, scrape, and finish parts that may be said to "fit a hole in the air." The time needed for this can be spent more profitably on those parts that

accomplish a useful purpose; likewise, it is unnecessary and a direct waste of time to go to the utmost refinement of measurement in a gauge that may be "plenty good enough" if accurate within $\frac{1}{64}$ inch—as a gauge for the blacksmith, for instance. Before constructing a tool, the purpose and the accuracy required for each integral part of it should be studied; the operations necessary to produce it can then be regulated accordingly.

7. The design and construction of a tool are intimately correlated, as becomes painfully apparent when special methods needed for its construction have not been taken into account and it becomes necessary to devise expensive makeshifts in order that the whole work previously done on the tool may not be lost. For this reason, no matter by whom the tool has been designed, it is good practice to go over the whole design and see if every operation required in the production of the tool can be actually performed with the facilities at hand. If not, and when circumstances permit it, the design should be changed; provided, of course, that the change will not affect the efficiency.

DIMENSIONING DRAWINGS.

8. In dimensioning a drawing, it should always be the aim to give all dimensions with special reference to the manner in which the tool must be constructed. If the toolmaker will have to work from some certain surface in order to lay out the different parts of the tool, and will have to make all his measurements from it, let all dimensions on the drawing or sketch read from that surface. If this plan is followed, a great deal of needless work is obviated. When giving the distance between holes that have to be accurately located in reference to each other and in reference to some fixed point of the tool, put in *all* the dimensions that the toolmaker needs to thus locate them; this is better than expecting him to make these calculations himself.

A case in point is shown in Fig. 1. In view (*a*), part of a jig is shown in which the three holes are to be located with reference to one another and to the finished surfaces *a* and *b*, as shown by the dimensions. The dimensions given would be sufficient for work not requiring any great degree of accuracy, say for ordinary machinist's work. With these dimensions, the aid of a surface gauge, a surface plate, an angle block, and by extremely careful work, the centers may be laid out within a limit of error of $\frac{3}{1000}$ inch, and an expert may even bore the holes within that limit of variation. But suppose that a greater degree of accuracy is required; assume that the limit of variation is not to exceed one-half of $\frac{1}{1000}$ inch. In order to obtain this degree of accuracy, which must not be imagined to be anything extraordinary, the toolmaker must substitute contact measurements for measurements taken from a scale and then transferred by scribed lines to the work. In order to make these contact measurements, the toolmaker needs the dimensions marked *x*, *y*, and *z* in Fig. 1 (*b*); if these are not given, he cannot conclude the work until they are supplied.

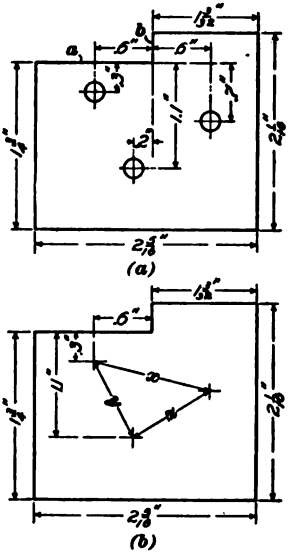

FIG. 1.

9. Referring again to Fig. 1 (*a*), it will be noticed that the dimensions locating the holes with reference to one another and to the surfaces *a* and *b* are given in decimal parts of an inch, and the other dimensions in common fractions. This is done in accordance with a method of dimensioning that, while not universal, is well deserving of wider application. It simply signifies that all dimensions given decimally are *accurate* dimensions, and that the parts are to

be located or made to those dimensions as closely as can be measured with a micrometer, vernier calipers, or similar measuring instrument decimally graduated. On the other hand, for those dimensions that are expressed in common fractions, no great accuracy in machining or fitting is required. If this system of dimensioning is adopted, it usually results in the reduction of needless accuracy, which, in turn, means a decided saving in the labor cost.

On good work it is often advisable to specify on the drawing the limit of variation permissible; this prevents choice of methods entailing a vast amount of work when less elaborate methods will produce a job that is "good enough for the purpose."

READING DECIMALS.

10. Since, with very rare exceptions, the measuring instruments of the toolmaker are graduated to read to the one-thousandth part of an inch, and some to the one ten-thousandth part of an inch, dimensions on drawings for tool work are in many cases given decimally. Trouble is experienced occasionally in reading them correctly, hence a short explanation of how to read decimals is here given. The method given, while differing from that laid down in works on arithmetic, is in common use in shops, and is especially adapted to the needs of the toolmaker on account of the graduations of his measuring instruments reading directly to thousandths of an inch. As decimals containing more than four figures are very rarely met with in tool work, their reading will not be considered here.

Rule.—*Read the first three figures to the right of the decimal point as a common fraction having one thousand for its denominator, and read the fourth figure as a fraction having ten for its denominator and one one-thousandth of an inch as a unit.*

Figures to the left of the decimal point are whole numbers and are to be read as such. Commence reading the

decimal at the first figure greater than zero, reading from left to right. For example, 1.0567″ would be read, one and fifty-six one-thousandths and seven-tenths of a thousandth of an inch; .0005″ may be read, five-tenths of a thousandth of an inch; .072″ would be, seventy-two one-thousandths of an inch. When there are less than three figures to the right of the decimal point, annex enough ciphers mentally to make three figures. Thus, .07″ would be read as though it were written .070″ and may be expressed as seventy one-thousandths of an inch, and .4″ would be read as though it were written .400″, i. e., four hundred one-thousandths of an inch.

Suppose a micrometer graduated to read to ten-thousandths of an inch is to be set to read .7653 inch. Then, since on all portable micrometers the one-thousandth of an inch graduations are independent of the vernier by which the tenth part of a one-thousandth is obtained, the micrometer would be set first to seven hundred sixty-five one-thousandths, and then, by the aid of the vernier, set ahead three-tenths of one-thousandth of an inch. By accustoming himself to read decimals in this manner, a person is less liable to make an error in setting or in reading the micrometer.

WORK OF THE TOOLMAKER.

11. In its broadest sense, the work of the toolmaker comprises the design and construction of machine tools, such as lathes, planers, shapers, etc., in addition to that of the small general tools, such as taps, dies, reamers, milling cutters, and the special tools, such as jigs, gauges, and similar implements used in the production of duplicate work. It being the tendency to specialize in every direction of machine-shop work, the journeyman toolmaker today does not generally build the machine tools himself, but, instead, produces the tools and special appliances for the construction of the machine tools in an economical manner.

The making of taps, dies, reamers, milling cutters, and

similar cutting tools forms, in most shops, but a relatively small part of the toolmaker's work, since there are many concerns making a specialty of this work. In consequence thereof, all such tools can be bought of the makers for a small fraction of what their cost would be if made singly and with the facilities usually found in tool rooms. Many of these tools thus bought are really superior to home-made tools, simply on account of the makers having the proper facilities.

As far as cutting tools are concerned, the work of the individual toolmaker is confined, except in relatively rare instances, to the making of *special* cutting tools differing in one or more dimensions or in design from the standard sizes in which the makers supply them. The production of the special tools used where articles are manufactured in quantities under the interchangeable system, and such special tools as tend to cheapen the cost of manufacture where machinery is not built in large quantities, form, in general, by far the greater part of the toolmaker's work.

MEASUREMENTS.

12. Classification of Measurements.—The measurements to be made in tool construction may be divided into two general classes: (1) *Approximate measurements;* (2) *precise measurements.* The adoption of one or the other class of measurement depends on the accuracy required. In most cases, both classes of measurement are used on a job, since a tool is rarely of such shape as to require measurements of precision for each and every part of it.

13. Approximate measurements are those made with the aid of an ordinary graduated steel scale and a caliper, dividers, scribing block, surface gauge, etc., or measurements that may be classified as direct visual measurements. While an expert using the greatest care and

working with a magnifying glass can set calipers by a steel scale within a limit of variation of .001 inch of the true size, there are rather few people that can do so. Generally speaking, the limit of variation, that is, the degree of accuracy attainable, may be placed at .002 inch; it requires quite close work to attain this accuracy.

14. Precise measurements depend primarily on gauges of various kinds that represent commercially accurate subdivisions of the standard yard. These gauges, among which may be mentioned the standard end-measure pieces made by Pratt & Whitney, and the reference disks made by Brown & Sharpe, are carefully ground and lapped to a size not varying more than $\frac{1}{100000}$ inch from the true size. Gauges of this degree of accuracy are naturally quite expensive, and hence are not intended for use in the machine shop, but rather for the testing of micrometers, vernier calipers, and similar shop-measuring instruments. The precise measurements that the toolmaker is usually called on to make depend for their precision on his sense of touch, they being chiefly measurements of contact. As a matter of course, it is here assumed that the measuring instrument used—as a micrometer, for instance—is commercially correct.

With an accurate instrument and a finely developed sense of touch, a surprising degree of accuracy can be obtained by direct-contact measurement. Instances are numerous where toolmakers have finished work that, upon testing by more refined methods, was shown to be accurate within $\frac{1}{300000}$ inch. To attain this degree of accuracy, a long training is required; however, very little work that the toolmaker is called on to do will need to be within this limit. To attain accuracy within a limit of variation of .0001 inch is possible for almost any one that possesses a sensitive touch. It may sound like a very small amount, but its magnitude will be realized very forcibly when a hardened, ground, and lapped cylindrical plug is placed between the anvils of a micrometer set to just touch the plug. Let the micrometer be

screwed up .0001 inch and let the difference in the force required to push the plug through the opening be noted. The difference will prove a surprise to any one that has never felt this demonstration of the magnitude of the tenth part of one-thousandth of an inch. While granting that an expert may attain a greater accuracy, generally speaking, the limit of accuracy of ordinary contact measurements may be placed at that figure.

15. Accumulation of Errors. — It must not be inferred, however, that all work can be done or is done within this limit of variation; while it is possible to attain this accuracy for *one* contact measurement, it is unreasonable to expect to get it when a number of successive contact measurements have to be made in order to obtain a precise over-all dimension. Naturally, the total error will very likely be more than the error of each individual measurement.

A case illustrating this is shown in Fig. 2. The problem given is one that frequently arises in one form or another.

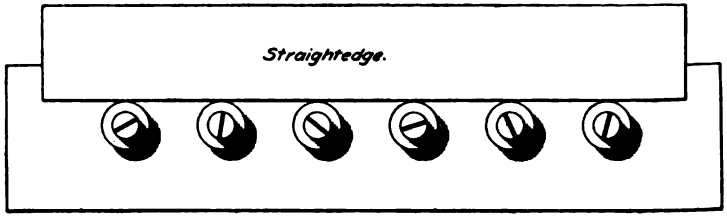

FIG. 2.

In this case, a row of six holes is to be bored in some part of a jig; the holes are to be in a straight line, equidistant, and 1 inch apart. It is required that the holes be bored with the greatest possible degree of accuracy attainable with the measuring instruments at hand, which are limited to a 1-inch micrometer. Under the circumstances, some toolmakers would locate the centers of the holes by temporarily attaching small annular circular steel disks of known diameter to the work by fillister-headed screws and placing them the required distance apart by the aid of a temporary gauge filed

up to a length equal to the center distance of two adjacent holes diminished by the sum of the radii of the two adjacent disks. If all disks are alike, the same temporary gauge will answer for each division. The disks are placed in line by being brought up against a true straightedge. The work is then placed on the face plate of the lathe and trued up until one disk runs true; the disk is now removed and the hole bored. This operation is repeated until all the holes have been bored. Now, while each hole may have been located originally within say $\frac{1}{10000}$ inch, the errors of each measurement may have accumulated until the center-to-center distance between the end holes may vary an amount considerably in excess of the limit of variation of a single contact measurement.

16. In a job of the kind here shown, the errors that prevent absolute accuracy are as follows:

1. The error of the measuring instrument. This, with an instrument purchased of a reliable maker, is usually exceedingly small.

2. Error in measuring the size of the disks. This should not exceed .0001 inch.

3. Error in making the temporary gauge. This need not be more than the previous error.

4. Error in placing the disks equidistant and at the required distance. Its magnitude will be a combination of errors 2, 3, and 4. These errors may accumulate or neutralize, partially or entirely.

5. Error in chucking the disk to run true. This error need not exceed .0001 inch if a sensitive indicator is used.

6. Error in boring. Its magnitude depends on the skill of the toolmaker; it may be infinitesimal or quite appreciable.

Examining into these errors and knowing that some of them cannot be obviated entirely, it is seen that the best that can be done is to reduce each individual error to

the lowest possible limit. The better the sense of touch is trained and the more skill is used, the closer a final result may be attained.

17. Reduction of Accumulating Errors.—We will now investigate the elimination of errors for this particular case. Suppose that a 2-inch micrometer is at the disposal of the toolmaker. Then error 3 can be eliminated entirely, since the micrometer can be used directly over any two adjacent disks Error 4 will also be reduced, since there is one measurement less to be made for the location of any two adjacent disks; that is, there are now three contact measurements instead of four. Error 2 can be diminished when the disks are exactly alike by placing three or four of them on a surface plate, pushing them all in contact with a straightedge and one another, and then measuring their combined size, finally dividing the measurement by the number of disks. Error 1 cannot readily be eliminated by any means at the command of the toolmaker. Errors 5 and 6 can be minimized by careful work.

From the preceding discussion, it is seen that a careful study of the way in which the measurements can be made is advisable in order to secure accuracy. In general, it may be stated that, in order to secure the greatest accuracy where a number of successive contact measurements are necessary, the number of the measurements should be reduced to the smallest number feasible with the measuring instruments at disposal. When a number of successive measurements are needed for intermediate parts and the object sought is accuracy of the combined length of these intermediate parts, in addition to their own accurate location, make, first of all, the longest measurement circumstances permit, and from it obtain the subdivisions. This applies not only to precise measurements, but to approximate measurements as well. For illustration, assume that, in the job shown in Fig. 2, the distance between the end holes is required to be as precise as it can be made. Then, facilities permitting, the two disks locating them should be adjusted

first of all, and the intermediate disks from these in turn. The following may be laid down as a general rule:

Rule.—*Where several methods of measurement are feasible, the method that involves the fewest and most direct measurements should always be chosen.*

18. Considering the different methods of measurement that are feasible, it will be seen upon reflection that no rules can be given. The toolmaker must consider the means of measurement at hand and the nature of the job; he must then use his ingenuity and be guided by his practical experience.

19. For measurements that have to be made within a smaller limit of variation than is attainable by direct-contact measurements, special forms of measuring instruments based on the principle of the micrometer are used. In these machines, special devices show the *degree* of contact of the measuring surfaces with the work. They are to be found in a few of the leading shops where accurate work is done, being intended for measurements within a limit of variation of $\frac{1}{10000}$ inch. They are used rarely for work other than making standard gauges intended for testing the ordinary measuring instruments. For measurements closer than the above, a machine known as a "comparator" is used. Since it can scarcely be considered as a measuring instrument suitable for tool-room work, it will not be described here.

LIMITATIONS OF TOOLMAKING.

20. The limitations of toolmaking are twofold; they are **limitations of accuracy** and **limitations of commerce.** The first depend ultimately on the degree of skill, knowledge, and ingenuity of the individual and the mechanical resources at disposal. In many cases, a sharply defined limit is set by restriction as to cost. The second depend on the conditions of each particular case; theoretically, they

may be said to have been reached when further toolmaking fails to reduce the cost of production or to improve the quality. As a general rule, the commercial limitations are reached in practice when the cost of production has been reduced below that of competitors. At this period, in most cases, a halt is called to the devising of new tools or the improving of old ones until further advance is made necessary by competitors lowering the selling price or bettering the quality of the product.

SPECIAL TOOLS USED IN TOOLMAKING.

21. In addition to the ordinary measuring instruments and similar devices used by the machinist, the toolmaker needs an indicator for showing the truth of cylindrical work, and also a center indicator. There is quite a variety of other tools of great use to the toolmaker, but since these are fully described in the catalogues of concerns making a specialty of measuring instruments, no space will be given to them here.

The lathe indicator and center indicator have been comparatively unknown and have heretofore been made by the toolmaker himself; as a consequence there is a great variety of designs. The two instruments shown in Figs. 3 and 5 and the holder for them shown in Fig. 6 were designed by the writer and have been used by him constantly for fine work. Their construction is not covered by patents. Several firms are now making good indicators.

22. Construction of a Lathe Indicator. — The lathe indicator is shown in Fig. 3, the illustration being full size. The purpose of the indicator is to magnify any untruth of the work in order to make the error more visible; the most obvious and direct method is to use a lever with a long and a short arm. The short arm bears against the work. When the latter is revolved in the lathe, any error, due either to the work not being round or to its not being set centrally,

causes the end of the long arm to describe an arc, the length of which is directly proportional to the ratio between the lengths of the two arms. In other words, the longer the long arm is made in proportion to the length of the short arm, the more sensitive the indicator will be. In practice, it is rarely necessary or advisable to make the ratio more than 1 to 50; with this ratio, an error in the work amounting to only .0001 inch will cause a movement of the long arm

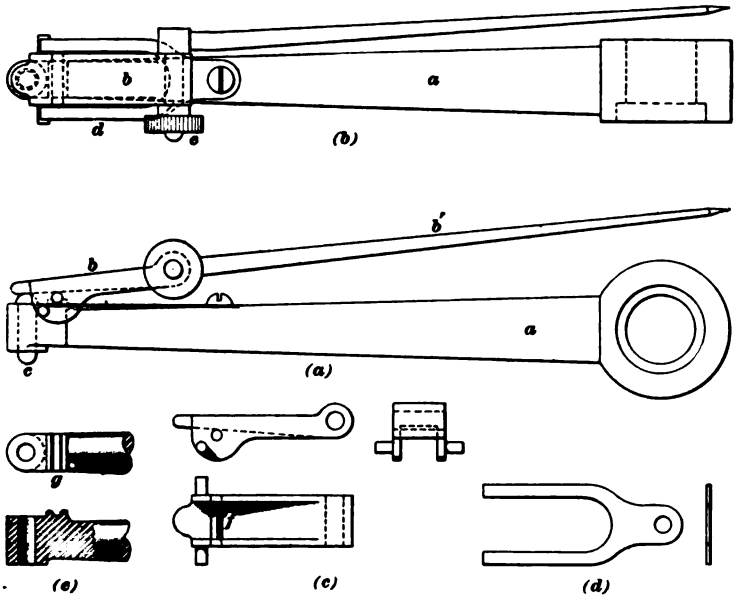

FIG. 8.

through an arc fifty times as long, or .005 inch in length. This is an amount that can plainly be seen with the naked eye. If the indicator is made more sensitive than this, it is too liable to be affected by the vibrations of the floor and machinery that exist to a greater or less degree in all shops. For special work requiring the greatest of accuracy, an indicator may be constructed with a greater degree of sensitiveness than that here recommended as the limit for general

work; in that case, it must be used in a place free from vibrations.

23. Referring to Fig. 3, views (*a*) and (*b*) are, respectively, a side elevation and a plan view of the indicator. It consists essentially of four parts. These are the body *a*, the lever *b*, the feeler *c*, and the spring *d*. For convenience, the lever is divided into two parts *b* and *b'*. They are so joined that *b'*, which forms part of the long arm of the lever, can be swiveled to any convenient position within range. By means of the locknut *e*, the two parts may be locked together after adjustment. The division of the lever into two separate parts also allows the degree of sensitiveness to be increased or decreased by the substitution of different arms. The end carrying the feeler is hardened; the hole that receives it is lapped true and smooth. The feeler itself is hardened, ground, and lapped so as to be a good sliding fit in the hole. Both of its ends are hemispherical; the upper end is enlarged to form a stop. The chief peculiarity of the lever is the manner in which it is fulcrumed, the fulcrum being so designed that not only is all wear taken up automatically, but also the possibility of any lost motion at the fulcrum is done away with. This is done without the introduction of any complicated device.

Referring to view (*c*), which is a detail drawing of the main part of the lever, it is seen that the fulcrum pin *f* is held by its ends in the two wings that straddle the end of the body *a*. This pin is hardened and lapped smooth; it is then driven home. The seat or bearing for the fulcrum pin is shown in view (*e*). A slot *g*, about two-thirds the diameter of the pin in width, is cut to a depth sufficient to have the pin clear the bottom of it. The upper edges of the slot are slightly beveled; the fulcrum pin rests on these two edges. It is held down to its seat by the straddle spring *d*, which, by reason of its bearing on the lever *between* the fulcrum and the point of contact at the feeler, holds the fulcrum pin down, prevents any lost motion, takes up any wear, and also causes the lever to follow any sliding motion

of the feeler. The straddle spring is shown in view (*d*). It should be a rather stiff spring; if made of the size shown in the drawing, it should be made from sheet steel $\frac{1}{32}$ inch thick.

24. Testing Work.—Suppose it is desired to test a piece of work to find out if it runs true on dead centers. Place the work between the centers of the lathe, and, after attaching the indicator to its holder, which is shown in Fig. 6, adjust it so that the feeler will bear hard on the work to be tested and be about perpendicular to the surface of the work. Rotate the work between the centers by hand and watch the end of the long arm. If it moves, it indicates one or both of two things: (1) The work may not be cylindrical; (2) the work may be eccentric in regard to the centers on which it has been finished.

A good idea of the kind of error may be formed by carefully watching the movement of the end of the lever. If it vibrates steadily just once for each revolution of the work, the latter is most likely to be round, but not central in regard to its centers. If the pointer moves in jumps, i. e., makes several vibrations during one revolution, the work is most likely to be out of round and it may also be eccentric. To test its roundness, caliper it in a number of directions, preferably with a micrometer. When the work is eccentric, it can often be made central in regard to its centers by carefully lapping the center or centers with a brass lap charged with emery, provided the error is very small, say .0005 inch. When the end of the long arm remains stationary, it shows the work to be both round and concentric with its centers.

25. The indicator may be applied to a hole in a piece of work held in the chuck or on the face plate, for the purpose of finding out if the axis of the hole coincides exactly with the axis of the spindle; in other words, to find out if the hole runs *true*. If the hole is too small to admit the feeler of the indicator, grind up a cylindrical plug to fit the hole nicely, and apply the indicator to the outside of the cylinder. The indicator may also be applied to the face of

work, to see if it has been faced true or runs true sidewise. Likewise, it is of great assistance in rechucking or resetting cylindrical work that is required to be chucked with great accuracy.

26. The particular design of indicator here shown, being removable from its holder, can be attached to a surface gauge and may then be used for testing the parallelism of straight surfaces. As is well known, it is very difficult to measure the parallelism of straight surfaces when they are far apart; in many cases calipers cannot be applied at all. For instance, consider the piece shown in Fig. 4. The question arises as to whether the plane of the circular ring at *a* is parallel to the plane of *b*. Evidently, this cannot be measured by calipering. But if the indicator is attached to a surface gauge, the work may be placed on a surface plate and the feeler brought in contact with the ring *a*. If its pointer remains stationary while the feeler is moved around the ring, the surfaces are parallel.

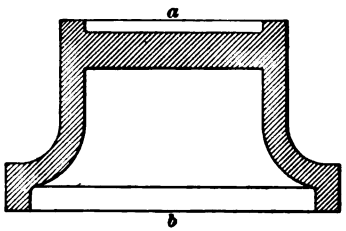

FIG. 4.

27. In order that a small motion of the end of the pointer will be visible, it is necessary to have some stationary point near it. The writer has used for this purpose a thin metal disk with a piece of soft brass wire, pointed at the end, soldered to it. The disk was placed between the joint of the holder and the joint end of the indicator; the brass wire was then bent to the shape required. If desired, some more elaborate construction may be employed.

28. Construction of a Center Indicator.—The center indicator shown full size in Fig. 5 is intended to aid in the proper location of work that is to be chucked so that a center punch mark will coincide with the axis of the live spindle of the lathe; that is, run true. The tool is essentially a lever with a long and a short arm turning about a

ball joint as a fulcrum. The indicator is clamped to the tool holder shown in Fig. 6, which is held in the tool post of the lathe; the carriage is then run forwards until the pointed end of the short arm bears lightly in the center punch mark in the work. The part *a* is made thin so as to form a spring that will hold the pointer in the center punch mark. If, on revolving the headstock spindle, it is found that the end of

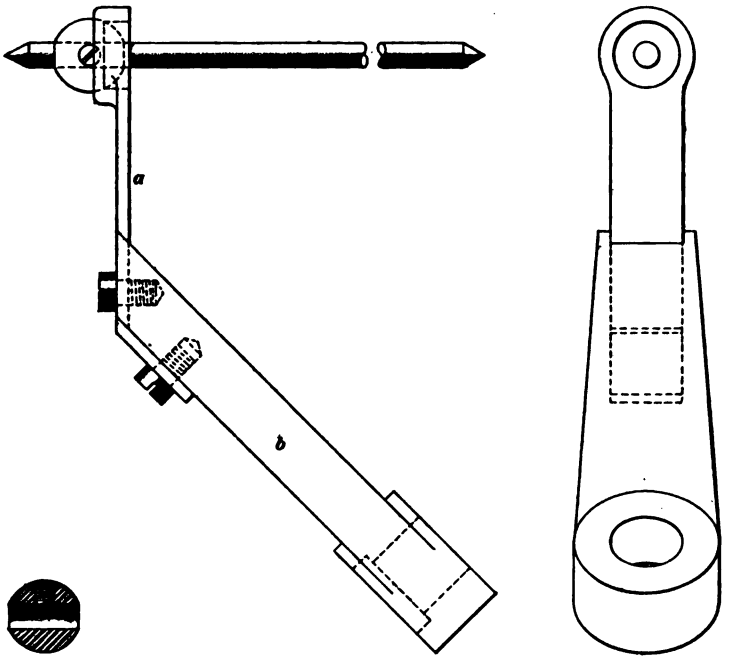

FIG. 5.

the long arm moves in a circle, it shows the center punch mark is not in the axis of the spindle, and the work needs moving until the end of the pointer remains stationary when the spindle with work attached to it is revolved. It is necessary to have some stationary point by which to observe the motion of the pointer; the dead center is the most convenient point to use.

29. If the indicator is connected to a holder in such a manner that it can be swiveled up and down, it can readily be used in all sizes of lathes. The center indicator shown possesses the advantage that there are no joints, and its accuracy is not disturbed by wearing of the joints. Furthermore, the pointer is adjustable for different degrees of sensitiveness; a small setscrew in the ball, a section of which is shown separately, is used for clamping the pointer and ball together. It is scarcely advisable to make the pointer longer than 15 inches; this length will be found to answer very well indeed. If made longer, the tool will be affected too much by the vibration of the machine.

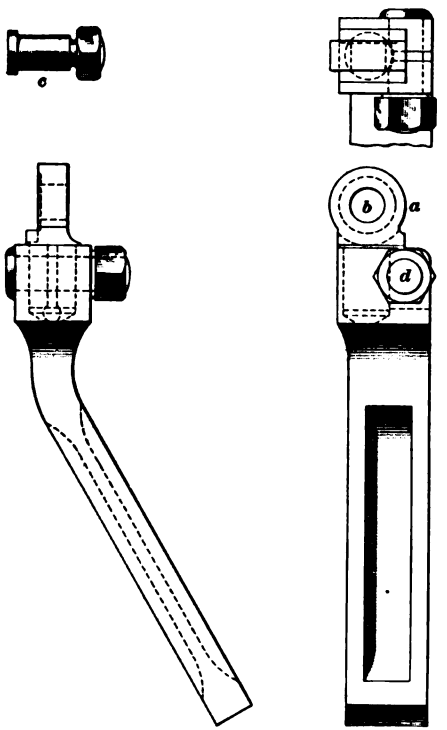

FIG. 6.

The pointer, the ball, and the head *a* should be made of tool steel and afterwards hardened. The head *a* must be drawn to a spring temper, since it serves as a spring. The ball and the end of the pointer may be drawn to a straw color. Grind together the ball and the seat in the head, using the finest flour emery. The shank *b* may be made of machinery steel and case-hardened.

30. Holder for Indicators.—The holder shown in Fig. 6 is made of tool steel. Its head *a* has a cylindrical hole *b* to receive the clamping bolt *c*, by means of which the indicators are

attached. The head has a cylindrical shank closely fitted to a hole in the holder proper. The holder is split at the front end; a clamping bolt *d* allows the head *a* to be locked in any position after rotation to the desired place. The combination of two joints allows a movement of the indicator in two planes perpendicular to each other; hence, the indicator can be swung through a very wide range of positions, and is thus adapted to almost any size of lathe and any kind of work conceivable. It is advisable to harden the holder at a rather low heat, and then draw it to a spring temper.

CUTTING TOOLS AND APPLIANCES.

DESIGN AND CONSTRUCTION OF TAPS.

FLUTES.

31. Number of Flutes.—In order to provide cutting edges, and also to provide a place for the reception of the chips, **taps** are fluted. It is almost the universal practice today to cut taps, independent of their size, up to and including 2½ inches diameter, with four flutes. For larger sizes, practice varies. Some toolmakers advocate five or more flutes for sizes above; others retain four flutes for all sizes. Generally speaking, four flutes will usually prove sufficient and satisfactory for all taps that cut a full thread of the right diameter in one operation. Special taps, or *hobs*, as they are often called, for tapping screw-cutting dies are made with from six to eight flutes; they are not intended to cut a full thread at one passage, but rather to finish out to size the hole in the die that has previously been tapped with a slightly smaller tap.

32. Forms of Flutes.—There are two different forms of fluting in common use, shown in Fig. 7 at (*a*) and (*b*), respectively. The form shown at (*a*) is considered by many

as the better form, since it makes not only the stronger tap, but also prevents the cracking of the tap lengthwise in hardening, owing to the absence of relatively sharp corners

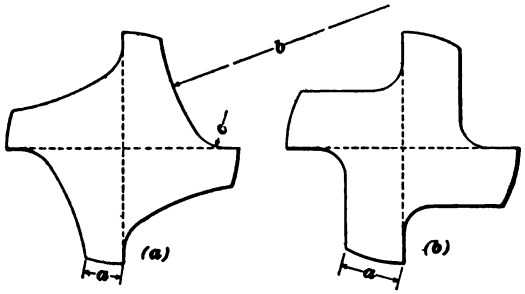

FIG. 7.

where a crack could start. The curve of the groove is composed of two arcs tangent to each other; the large arc, as *b*, may, for a four-fluted tap, have a radius equal to the diameter of the tap, and the small arc *c* may have a radius of one-sixth of the diameter. These proportions are approximate and vary somewhat, not only with different makers, but also on account of the inexpediency of having a different cutter for each different size of tap. In practice, one cutter will be made to answer for several sizes.

The fluting shown at (*b*) is probably the one in most common use, although it does not make as strong nor as easy working a tap. In order not to weaken the tap too much, the **land** *a* must be left wider than it is in Fig. 7 (*a*); this produces a greater friction in tapping. The sides of the flute are perpendicular to each other; the corner may have a radius of one-eighth of the diameter of the tap.

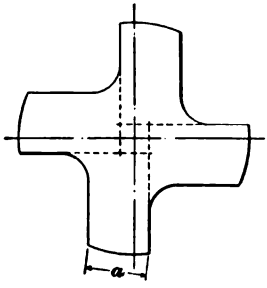

FIG. 8.

In both forms of fluting, it is the common practice to make the cutting edges radial, as shown by the dotted lines in Fig. 7. This answers very well indeed for general work. If a tap is to be used entirely for brass, and especially for brass castings, the

cutting edge may be slightly advanced in the direction of cutting parallel to a radial line, as shown in Fig. 8. This will give it a slight negative rake and cause it to cut more smoothly and with less liability of chattering. The amount that the cutting edge is advanced need not be very large; it may be from one-sixteenth to one-tenth of the diameter of the tap. Taps that are to be used for general work on all kinds of metal usually have their cutting edges radial.

HAND TAPS.

33. Design.—As the name implies, **hand taps** are intended for tapping holes by hand. Since it is rather difficult to use the tap without throwing a sideward strain on it, in consequence of which the tapped hole will be larger at the end where the tap was started, the construction should be such that it will counteract this tendency as much as possible. This is done by making the lands rather wide and giving no relief to the thread back of the cutting edge. The width of the lands for a four-fluted tap when made with flutes, as shown in Fig. 7 (*a*), may be two-tenths the diameter of the tap. When fluted with four flutes, as shown in Fig. 7 (*b*) and Fig. 8, the width *a* of the lands may be about one-fourth the diameter of the tap. The square on the end of the tap intended to receive the tap wrench is generally placed so that the corners are in line with the cutting edges.

34. Making a Hand Tap.—For a straight tap, select steel slightly larger in diameter, say $\frac{1}{16}$ inch, for sizes up to $\frac{1}{2}$ inch; $\frac{1}{8}$ inch for sizes up to $1\frac{1}{2}$ inches; and $\frac{3}{16}$ to $\frac{1}{4}$ inch larger for sizes above. Have it well annealed, preferably in slaked lime. Turn the shank and tap body to size, then mill or file the square and cut the thread in the lathe. The thread should be cut as smooth as possible; many toolmakers prefer to use the single-pointed tool for roughing out to within .002 or .003 inch of the correct size and then

finish it with a chaser. On small taps, but only when accuracy of pitch is not essential, the thread may be cut with a die. If the die is in good condition, a very good thread can be cut if plenty of oil is used in cutting; however, as with all dies that feed themselves, the pitch of the thread cut will be coarser than the pitch of the thread of the die. The thread having been cut, chamfer the end in the lathe an amount depending on whether the tap is to be a taper tap, plug tap, or bottoming tap. The tap is now ready for fluting. This can best be done in the milling machine, holding the tap between the centers or in the universal chuck, according to size. The cutter is set, by trial, to cut the correct depth of flute; large taps may require several cuts.

The flutes having been cut, the cutting edges will have to be filed up a little on the face with a rather fine file to remove the burrs left by the milling cutter, and if the tap is over $\frac{1}{4}$ inch, it had better be backed off by filing. The chamfered ends must be given clearance by filing. The size, and, preferably, the number of threads also, having been stamped on the shank, the tap is ready for hardening. To harden it, the safest way is to heat it inside of a piece of gas pipe, frequently turning the latter and changing its position. The danger of overheating and burning the steel, and of unequal heating, is greatly lessened thereby. The tap should be hardened at as low a heat as will make it hard enough so that a file will not "touch" it, dipping it vertically into clear water a little beyond the threaded part. It may then be ground in the flutes on an emery wheel to sharpen the teeth and make it bright for tempering. Draw it to a good straw color evenly all over, holding it some distance above the fire. When an emery wheel is not available, the cutting edges must be made sharp before hardening by filing with a fine file. The tap may be brightened in the flutes, after hardening, by grinding or by emery cloth, using care that the emery cloth does not touch the cutting edges; if it does, it will dull them more or less. It is best, however, not to use any emery cloth on a tap.

35. Effect of Hardening.—If the pitch of the thread and its diameter are measured after hardening, it will usually be found that the pitch and the diameter have changed a small amount. In a few instances, the tap will measure the same as before. There is no known way of preventing this change, which is due to hardening. It can be minimized by a slow, careful, and even heating, combined with a hardening at as low a heat as will be sufficient to make the tap hard. Fortunately, the amount of change rarely exceeds two-thousandths of the length and diameter, and is negligible for nearly all work.

36. Straightening Taps. — When taps are rather long, they will usually become crooked in hardening and

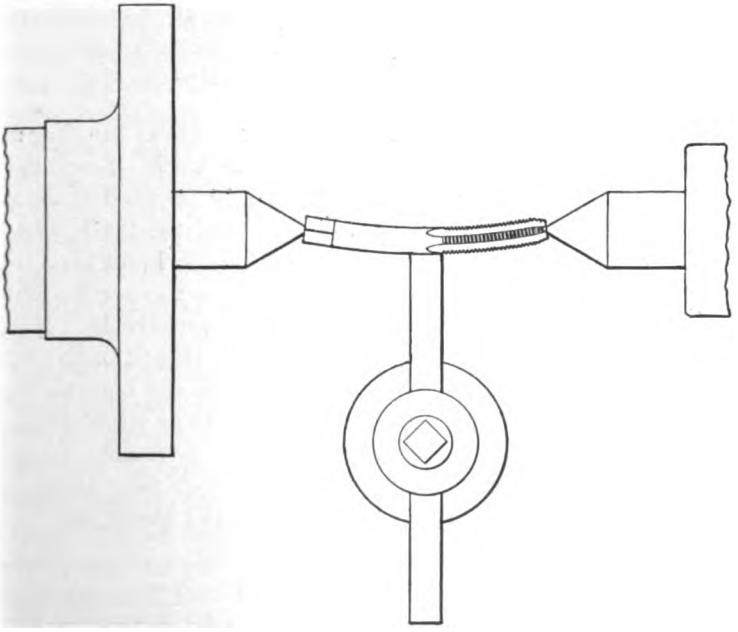

FIG. 9.

tempering. They can be straightened as follows: Place the tap between the centers of the lathe; fasten a piece of metal with a square end in the tool post and place it against the

highest point of the convex side, as shown in Fig. 9. Now, with a Bunsen burner or an alcohol lamp, heat the tap, which has been previously covered with lard oil, until the oil commences to smoke. Then, by means of the cross-feed, slowly force the tap over until it is a little crooked the other way and quickly cool it while between the centers. By repeating this operation, it may be straightened very nicely. The amount the tap must be forced over can only be ascertained by practical experience. No attempt can be made to give a rule for it. Other hardened and sprung work may be straightened in the same manner.

The tap should be straightened before drawing the temper. String solder may be used in place of oil to test the temperature when heating the tap. As quick as the solder melts, the tap is hot enough.

MACHINE TAPS.

37. Machine taps are intended for use in tapping machines, in the turret lathe, and for similar work. Since these taps are intended to be guided axially by their attachments, the lands can be made narrower than in hand taps, and relief can be given to the teeth, which causes them to cut more freely. Relief is given by filing the thread back of the cutting edge until the tap has the form shown in Fig. 10. Very little filing is necessary; it is not advisable to give too much relief, since, in backing the tap out, chips are liable to be drawn in between the work and the lands.

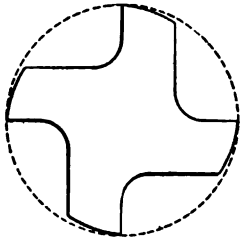

FIG. 10.

TAPER TAPS.

38. Relief.—In making a **taper tap,** attention must be paid to two points that are frequently overlooked, and in consequence of which the tap, though finely made otherwise, will produce poor work. These points are: (1) The teeth *must* be relieved back of the cutting edge; and (2) a taper

tap cannot be cut to correct pitch by setting the tailstock over and gearing up for the right number of threads per inch. A trial of a taper tap not relieved in the thread, especially if the taper is large, will immediately show that the tap, instead of cutting the metal, will squeeze it. This is due to the fact that the sides of the thread at the back of the lands drag against the work, thus preventing the cutting edges from cutting. The threads are usually backed off with a three-square file; manufacturers of taps use a special machine that relieves the thread in the process of cutting it.

39. Errors.—In order that the tap may have the correct pitch of thread, it must be cut by the use of a taper attachment. When a taper tap is cut in a lathe not fitted with a taper attachment, it is done by setting over the tailstock center. Two errors are then introduced that become more pronounced as the taper is made larger. In the first place, the pitch will be finer; in the second place, the thread, instead of being true, will be drunken. Neither one of these errors can be corrected very readily. The second error is due to the fact that, in taper turning with the tailstock set over, the work does not turn with a uniform angular velocity, while the cutting tool advances along the work with a uniform linear velocity.

When the taper is slight, the change in pitch and the drunkenness of the thread is ordinarily imperceptible to the eye; with tapers of $\frac{3}{4}$ inch per foot, the errors become sensible and increase rapidly as the taper becomes larger. For these reasons, taper taps should always be cut with the taper attachment. If none is available, there is nothing left except to set the tailstock over. The thread should then be well relieved; this will make the tap cut free, but will correct neither the pitch nor the drunkenness of the thread. In cutting the thread on a taper tap, the threading tool should be set square with the axis of the tap. This is the practice of manufacturers and is well worthy of general adoption.

40. In order that the toolmaker may determine whether the error in pitch introduced by setting over the tailstock is of sufficient importance to prohibit this method, the table below is given. In this table, the figures in the second column represent the length along the center line of the tap, in ten-thousandths of an inch, for 1 inch measured along the surface of the tap.

TABLE OF ERRORS IN TAPER TAPS.

Taper.	Length Along Axis.	Taper.	Length Along Axis.
$\frac{1}{8}$ inch per foot.	.9999	$1\frac{1}{8}$ inches per foot.	.9980
$\frac{1}{4}$ inch per foot.	.9999	$1\frac{1}{4}$ inches per foot.	.9973
$\frac{5}{16}$ inch per foot.	.9999	2 inches per foot.	.9965
$\frac{3}{8}$ inch per foot.	.9998	$2\frac{1}{2}$ inches per foot.	.9946
$\frac{7}{16}$ inch per foot.	.9998	3 inches per foot.	.9922
$\frac{1}{2}$ inch per foot.	.9997	$3\frac{1}{2}$ inches per foot.	.9895
$\frac{3}{4}$ inch per foot.	.9995	4 inches per foot.	.9863
1 inch per foot.	.9991		

NOTE.—The word *taper* is defined in a different manner by different persons; it will here be taken to mean *the difference in diameters per foot of length measured along the axis.* This definition is in accordance with the most general practice.

HOBS.

41. Design and Use. — Taps made for cutting the threads in solid and split dies for screw cutting are called **hobs.** They differ from ordinary taps chiefly in having more flutes; they are usually given from six to eight flutes. When hobs are to be used for *solid* dies, they must, of course, be of exact diameter. When used for dies *adjustable* through quite a range, it is advisable to make them larger. Their diameter may then be twice the depth of thread plus the diameter of bolt. It is recommended that the diameter of the hob should not be made larger than just given. Cutting an adjustable die with a hob larger than the screw to be cut with it, will have the effect of giving relief to the

threads of the die back of the cutting edges. In consequence of this relief, which in ordinary dies cannot readily be given in any other manner, the die will cut much more easily and cleanly. Hobs are advantageously used in connection with a leading tap slightly smaller in diameter. This relieves the hob of the most severe duty, and hence a smoother and truer hole will be tapped by it.

When making a hob, it must always be remembered that the perfection of the screw made by the die the hob is intended for, depends primarily on the hob; and hence this should be made as perfect as conditions permit. Any poor workmanship in the thread of the hob will be duplicated in the die, and usually in a more emphatic manner. A poorly cut die will naturally produce a poor screw thread. When tapping a die with a hob, plenty of oil should be used and care should be taken to see that the flutes do not become clogged with chips. Some persons do not relieve the hobs that are intended for straight dies, but taper hobs should always be relieved, for the same reason as taper taps.

The term "hob" is also applied to the milling cutter used for cutting the teeth of worm-wheels to correct shape. This style of hob will be treated of under the heading of "Milling Cutters."

42. Chaser Hobs.—Hobs for making chasers are made straight. They need not be longer than three times the width of the widest chaser that is to be cut by them. Numerous flutes are required, and, preferably, should be spaced a little unevenly. As they are intended to be used between the centers of a hand lathe, they should be provided with liberal-sized centers. A shank long enough to take a dog should be provided. For threads from 40 per inch to 8 per inch, a good size is $1\frac{1}{4}$ inches diameter, with the thread about 2 inches long, and the shank $1\frac{1}{2}$ inches long. About twenty flutes may be cut with a 60-degree cutter, making the cutting edges radial. Since the excellence of the chaser depends on the hob, the thread should be cut as perfect and smooth as possible. After hardening at a low heat, draw

the hob uniformly to a full straw color. When using it, adjust the rest to such a height that the upper side of the chaser will be about $\frac{1}{16}$ inch above the height of the center. The hob will then cut the teeth into the chaser with sufficient relief to make it cut free. The chaser itself may be drawn to a pale straw color.

ADJUSTABLE TAPS.

43. Design.—Where holes have to be tapped to a very exact size, as is often required in work done in large quantities under the interchangeable system, it is rather hard to produce solid taps that will tap the holes within the limit of variation permissible. While it is quite feasible to make them accurate within .0001 inch when soft, the change in diameter when hardening them will often go beyond the permissible limit of variation, especially when the tap is larger than $\frac{1}{2}$ inch. It is of very little use to try to make allowance for this change of diameter, since nobody can tell whether the steel will contract, expand, or remain the same diameter in hardening. For these reasons, **adjustable taps** have been designed. Some of these will cut a full thread in one passage through the work; others again can be used only for finishing a hole that has previously been tapped by a leading tap of slightly smaller diameter.

44. Examples of Adjustable Taps. — Adjustable taps may be made as shown in Fig. 11. There are four

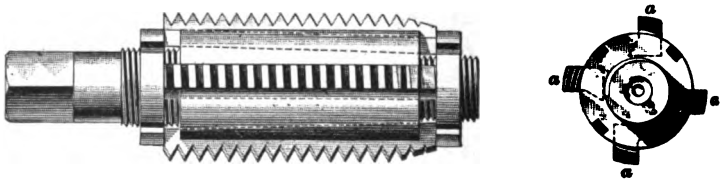

FIG. 11.

tool-steel blades *a*, *a* inserted in dovetail slots; the bottom of the slots makes an angle with the center line, or axis, of the tap. The blades are confined axially by two nuts, one

at each end. By varying the position of these nuts, the tap may be expanded or contracted a slight amount. Taps of this kind cannot ordinarily be made for sizes smaller than 1 inch, since the shank will become too small if made smaller.

45. In making such a tap, the body should be turned first. In the smaller sizes the body may be made of tool steel, and for large taps, of machinery steel. The slots can generally be cut faster and better in the shaper than in the milling machine. Cut a fine thread for the two nuts in the lathe; the diameter of the tap body, at the points where the nuts are located, is sometimes made small enough to clear the bottom of the slots. Thread and face each one of the two nuts at the same chucking, in order that the faces will be true with the thread, and make the nuts a good snug fit. The blades may now be milled or planed out of well-annealed tool steel and then carefully fitted to the slots. In order to make them of equal length, drive them into the slots and face their ends in the lathe. They should fit tightly enough not to slip during facing. Put the nuts on and screw the nut at the shank end up until it is within a short distance of the shoulder. Then tighten up the front end nut. Now turn the blades to correct size (approximately); cut the thread on the blades, using the lathe, and chamfer the front end with a square-nosed tool. Remove the nuts, mark the blades and slots with corresponding marks, drive the blades out, relieve the chamfered parts, and slightly back off the threads with a fine three-square file. The threads require backing off on account of the springing of the tap during thread cutting causing the back edge of each blade to be slightly higher than the front or cutting edge. After relieving, harden and temper the blades carefully, drawing them to a straw color. If the blades should spring very much, they must be straightened before inserting them again. Assuming the body to be of machinery steel, it may be well to case-harden the square at the end. An adjustable tap is usually set to correct size by actual trial.

46. A very simple form of adjustable tap is shown in Fig. 12. This method of construction is covered by a

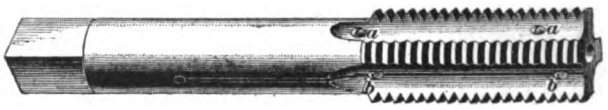

FIG. 12.

patent; The J. M. Carpenter Tap and Die Company, Pawtucket, Rhode Island, are the exclusive manufacturers of these taps. As shown in the figure, the tap is split. Taper-headed screws *b*, *b* allow it to be expanded, and binding screws *a*, *a* serve to lock the two halves together.

47. Another design of adjustable tap suitable for holes that pass clear through the work, or do not need to be tapped close to the bottom, is shown in Fig. 13. The

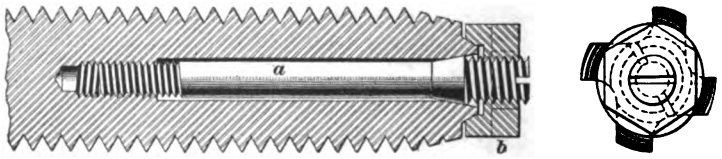

FIG. 13.

tap is split longitudinally; the two halves can be forced apart by a centrally located screw *a* having a tapering head. After setting it, the two halves of the tap are locked together by setting up the nut *b*, which has a beveled recess that engages the conical projection at the front end of the tap. While locking the nut, the central screw must be prevented from turning by inserting a screwdriver into its slot and holding it. The nut may be made hexagonal in form at its front part, as shown, or have radial holes drilled in its circumference. In the latter case, a spanner must be made for it. In making such a tap, it is advisable to cut the thread and flute the tap before splitting it. It may be slotted slightly beyond its threaded part, the slot terminating in a hole drilled perpendicular to the axis.

MULTIPLE-THREADED TAPS.

48. Occasionally, **multiple-threaded taps** are required. If these are intended to cut a full thread in one operation, the lands back of the cutting edges must be well relieved to allow the tap to cut freely; if this is not done, the force required for tapping may be sufficient to break the tap. Generally speaking, it is better to chase the threads in the hole to be tapped and use the tap for finishing only.

SQUARE-THREADED TAPS.

49. **Square-threaded taps** may be fluted in the same manner as V-threaded taps. If intended to cut a full thread in one operation, the lands must be well backed off, otherwise the amount of force required for tapping will be excessive. When used merely for sizing holes in which the thread has been roughed out, very little backing off is necessary.

LEFT-HANDED TAPS.

50. If a **left-handed tap** is required, it may be designed and made in the same manner as a right-handed tap, except that the flutes are to be cut in a way the reverse of that used for a right-handed tap. All remarks previously made regarding the number of flutes and the backing off of the lands apply to left-handed taps as well. It is a good plan to stamp left-handed taps with a large L on the shank, to call attention to the fact of their being left-handed. This is to be done not on account of machinists not being able to detect the difference, but rather on account of unskilled helpers failing to distinguish between right-handed and left-handed taps

---

COLLAPSING TAPS.

51. Purpose of Collapsing Taps.—A tap so constructed that the blades forming the cutting edges can be moved radially at will toward or from the center, is called a **collapsing tap.** They are used quite largely for work

done in the turret lathe, when the hole to be tapped exceeds 1½ inches in diameter. Their chief advantage is that they need not be turned back to withdraw them from the tapped hole; the blades are drawn in enough toward the center to clear the thread, and the tap can then be withdrawn by an axial motion. As a matter of course, nearly all the time required to wind an ordinary tap back is saved. Since a collapsing tap is quite an expensive tool, its use is limited by commercial considerations to work done in large quantities.

52. Design of a Collapsing Tap.—A simple collapsing tap designed for tapping a taper hole in brass castings is shown in Fig. 14. For this reason, the cutting edges of the blades are advanced in the direction of cutting; that is, they are given negative rake. The shank *A* is fitted to the turret. The end of the shank is bored out cylindrical to receive the tap body *B*, in which four dovetail grooves are cut, to which the blades or chasers are fitted. A circular groove *d'*, having a square cross-section [see Fig. 14 (*c*)], receives the lugs *d*, *d*, and confines the chasers longitudinally. The body of the tap is prevented from rotating by a pin *C* passing through it. This pin, while the tap is cutting, rests against the lower ends of the helical slots *F* and *F'*. When the hole has been tapped to the desired depth, the pin *C* is turned in the direction of the arrow. The pin then follows the helical slots and the body *B*

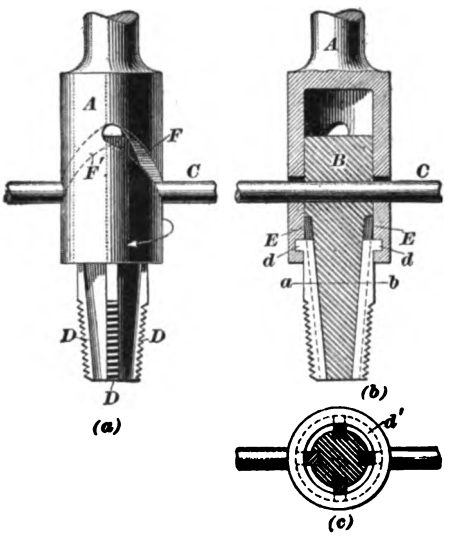

FIG. 14.

is drawn into the shank; since the dovetail grooves in which the chasers work are at an inclination to the axis, the chasers are drawn together and the tap can be withdrawn. To get it ready for work again, the pin *C* is turned back. A tap of the design shown in Fig. 14 may be used in a chuck in the lathe. When used for a turret lathe, it is almost always necessary that the hole is to be tapped to the same depth in every piece operated upon. If this is the case, it should be used in connection with an adjustable disconnecting tap holder.

53. Making the Tap Shank.—When making a collapsing tap of the kind shown, the only thing that may prove difficult will be the two helical slots. They are rather difficult to produce by hand, but if care is taken to use a helix that can be cut in the milling machine by an end mill, the slots are easily cut. If no milling machine adapted for spiral work is available, the slots may be cut in the lathe as follows: Gear the lathe to cut a thread having a pitch equal to one turn of the helix adopted. Then, with a scriber fastened in the tool post and the tap shank between the centers and forced to turn with the spindle, scribe a fine line on the shank in the proper place to represent the center line of the slot. Turn the work 180° between the centers *without* moving the headstock spindle; scribe a line again. Now throw the leadscrew out of gear and at the beginning and end of the slots scribe fine circles around the tap body. At the intersection of these circles with the helical lines, make fine center-punch marks, and divide along these lines into a sufficient number of divisions to drill out most of the stock. Center punch well, and drill out the stock, removing most of the stock between the holes with a keen-edged cape chisel. The slots may now be finished by a suitable planing tool to be held in the tool post of the lathe. The tap body is placed between the centers, and the dog properly adjusted to have the tool match the slot. A wooden wedge is then driven in between the tail of the dog and the side of the slot in the face plate that drives it; rotating the

leadscrew by hand will then cause the tool to travel along the tap body, and, if fed in by means of the cross-feed screw, it will cut out the slot. The planing tool is preferably made so as to plane both sides of the slot at once. The opposite slot may be finished in the same manner.

54. Collapsing taps may be made in a variety of designs to suit different kinds of work. Thus, where bottoming holes are to be tapped, the blades may be arranged to collapse by means of a centrally located movable stop within the tap body coming in contact with the bottom of the hole; the stop when moving back then draws the blades inward.

For some work it may be advantageous to design a collapsing tap on the lines of the ordinary scroll chuck, or the geared three-jawed or four-jawed automatic chuck. These designs will readily suggest others.

RELEASING TAP HOLDERS.

55. Purpose and Design. — In screw-machine and turret-lathe work, when holes are to be tapped to a uniform depth, it is advisable to use a tap holder that will automatically release the tap from the holder as soon as the hole has been tapped to the proper depth. Such a holder will allow

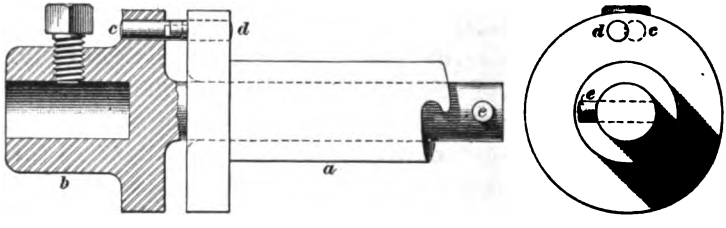

FIG. 15.

of rapid tapping, and, when properly adjusted, obviates breakage of taps through striking the bottom of the hole.

A very common and highly efficient releasing tap holder is that shown in Fig. 15, which is especially adapted to screw-machine and turret-lathe work. It consists essentially of

two pieces. The sleeve *a* has a shank that fits one of the tool holes of the turret. The tap holder proper is free to slide longitudinally within the sleeve a certain amount; when the clutch pins *c* and *d* are disengaged, it is free to rotate within the sleeve. The end of the tap-holder shank carries the backing-out pin *e*, which is so located that when the clutch pins *c* and *d* will just clear each other, it will be from $\frac{1}{8}$ to $\frac{1}{4}$ inch away from the helically formed end of *a*. The end *b* of the tap holder may be made in a variety of ways to suit the purpose. The simplest way is to make it as shown; the tap shank fits the hole and is held from turning by the set-screw. If thus made, its use is obviously limited to taps having the same shank diameter. To make it adapted to all sizes of taps, the end *b* may be a universal chuck; the holder then becomes a *universal* releasing tap holder.

56. Operation. — The operation is as follows: The shank *a* being fastened in the turret and the stop-pin *c* butting against the flange of *a* and the stop-pin *d* preventing *b* from turning, the slide of the turret is advanced and the tap then engages the revolving work. As soon as the turret slide comes against its stop, the tap, by reason of being entered in the work, is drawn forwards until *c* and *d* are disengaged, when it is free to revolve. This stops further tapping. The spindle of the machine is now reversed, which causes the work, and hence the tap, to turn in an opposite direction. The turret slide is then withdrawn to the rear; the backing pin *e* during the backward motion is guided by the helical end into the recess of the sleeve shank, and any further revolution of the tap is thus arrested. In consequence of this, the tap is backed out by the revolving work.

57. Forming the Helical End. — When making a releasing tap holder, it is well to remember that the helix at the end of the sleeve shank must be right-handed for a right-hand tap and left-handed for a left-hand tap. The pitch of the helix may be about one and one-half times the diameter of the stop-pin. The helix is most readily produced in the lathe, gearing the lathe to give the proper pitch and using a

square-nosed tool for cutting the helix. A line may first be scribed to mark the position of the helix and then most of the stock removed by drilling and chipping, leaving to the lathe tool the finishing only.

58. Proportions.—The diameter of the sleeve shank is fixed by the size of the holes in the turret for which it is intended, as is also its length. The shank of the tap holder may be about five-eighths the diameter of the sleeve shank. The three stop-pins may have a diameter equal to about one-third the diameter of the tap-holder shank. For small work, it is usually advisable to make the whole device of tool steel.

TOOLMAKING.

(PART 2.)

CUTTING TOOLS AND APPLIANCES.

DIES FOR THREAD CUTTING.

CUTTING EDGES.

1. Number of Cutting Edges.—It is now the universal practice to give dies four **cutting edges** for all sizes up to and including 4 inches. Beyond that size, practice varies. Some toolmakers advocate five cutting edges for dies above 4 inches; others prefer four cutting edges for all sizes. There is no particular objection to making large dies with five or more cutting edges beyond the fact that it slightly increases the first cost.

It is generally admitted that the only instance in which it is absolutely necessary to give more than four cutting edges to a thread-cutting die is that in which part of the circumference of the work to be threaded is cut away. More cutting edges are then needed in order to steady the die and thus prevent crowding into the work on the side where the metal is cut away. The number of cutting edges may then be as given in the following table:

Copyright, 1901, by THE COLLIERY ENGINEER COMPANY.
Entered at Stationers' Hall, London.
All rights reserved.

TABLE OF CUTTING EDGES FOR SCREW-CUTTING DIES.

Circumference Cut Away.	Cutting Edges.
none	4
$\frac{1}{24}$	5
$\frac{1}{12}$	6
$\frac{1}{8}$	7
$\frac{1}{6}$	8

When more than one-sixth of the circumference is cut away, dies usually will fail to cut a satisfactory thread.

Attention is called to the fact that it is customary to denote the size of a die by the diameter of the screw it will cut; thus, a die that will cut a 1½-inch screw is called a 1½-inch die, irrespective of the outside diameter of the die itself.

2. Rake of Cutting Edges.—For general work and for dies that are to be used indiscriminately for iron, steel, brass and other copper alloys, it is advisable to make the cutting edges radial. For dies that are to be used entirely for brass castings, the cutting edge may recede some from a radial line, thus giving a slight negative **rake.**

NON-ADJUSTABLE DIES.

3. Making a Solid Die.—Owing to the difficulty of sharpening the cutting edges, and also owing to the difficulty of making them to an accurate size, solid dies, i. e., dies made out of one piece, are used comparatively little nowadays in machine-shop work. Being inexpensive in comparison with adjustable dies, they may sometimes be used with advantage for special work when only comparatively few threads are to be cut and no great accuracy as to size is required.

When only one die of a special size or pitch of thread is to be made, it will scarcely pay to make a hob for cutting the

thread in it. The usual way, which is also the cheapest, is to cut the thread in the lathe, provided of course the die is large enough to permit this to be done. Since it is very difficult to measure an internal thread, a male thread gauge of the required diameter and pitch of thread is first made, unless a tap is in existence that will serve as a male gauge. The thread having been cut, the beginning of the thread in the die is chamfered while still in the chuck. Cutting edges and clearance spaces are then produced by drilling and filing, and, after relieving the chamfered threads, the die is ready for hardening.

The die may be made as shown in Fig. 1. The die illustrated is round, being intended for use in the die holder of a screw machine. It may be made of any other form, however. The outside diameter of a solid die is usually fixed by the diameter of the holder that it is intended for, but should not be made less than 2.5 times the diameter of the

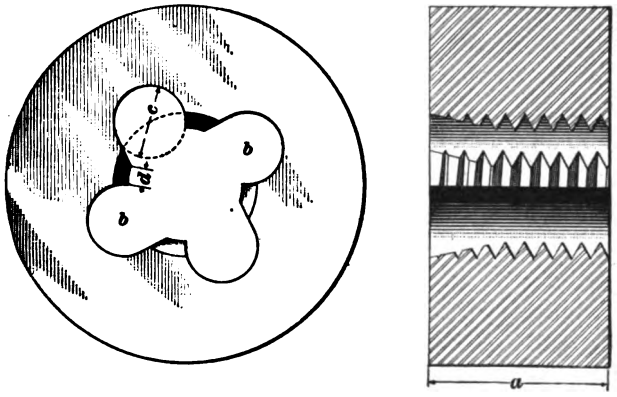

FIG. 1.

screw it is to cut. The depth a of the die may be 1.25 times the diameter of the screw, and slightly more for very small screws, such as machine screws. If four cutting edges are used, the clearance holes, as b, b, should be spaced equidistant and with their centers on a circle having a diameter equal to the diameter of the screw to be cut. The diameter c of the clearance holes is usually made one-half the size

of the die, and the top *d* of the lands about one-twentieth the circumference of the circle tangent to the lands. The cutting end of the die is to be chamfered out about three to four threads deep, as shown in the cross-section. The chamfered parts must be relieved in order to give keen cutting edges.

4. When making a solid die, cut the thread first. Then screw in a piece of steel the full length of the die and face it off flush with the faces of the die. The temporary male thread gauge previously mentioned may be used for this purpose to advantage when only one special size die is to be made. Lay out the centers of the clearance holes on the back face of the die and drill through. After drilling the first hole, insert a plug that fits tightly into the clearance hole just drilled, in order to prevent the screw within the die from turning while drilling the other clearance holes. After drilling, remove the screw and finish the back edge of the lands by filing. File the front edge carefully with a fine file to remove the burrs, relieve the chamfered parts, then harden and temper, drawing to a good straw color.

5. When a large number of solid dies of the same size are to be made, it is cheaper to cut the thread by tapping, finishing with a hob of correct size. The chamfering should be done with a suitable taper reamer prior to tapping. The clearance holes may then be drilled in a jig; with a substantial jig, if the drilling is carefully done, there will be no need of inserting a screw in the tapped hole. The holes in the jig will steady the drill sufficiently for drilling. For rapid finishing of the clearance spaces, a hardened filing jig will be found of great service. The relieving of the chamfered cutting edges is usually done by hand. While it can be done by special tools, this will rarely pay except when the number of dies is very large.

6. Inserted-Blade Dies.—When dies are required for screws larger than 2-inch, it is usually advisable to make them with blades inserted in a ring made of cast iron, wrought iron, or machinery steel. There are several

benefits gained by this construction. In the first place, it obviates all danger of losing the die by cracking while hardening; in the second place, it allows the die to be readily sharpened, since the blades are removable; and, again, after the ring or die body is once made, new blades can be made at a fraction of the cost of a solid die. The first cost of an inserted-blade solid die of small size is probably a little higher than that of a solid die up to 2½ inches in diameter; above this size, the inserted-blade solid die is usually cheaper to construct and will give better satisfaction on account of ease of sharpening and repair.

7. A very solid and simple inserted-blade solid die is shown in Fig. 2. Dovetailed slots, with the sides radial, are

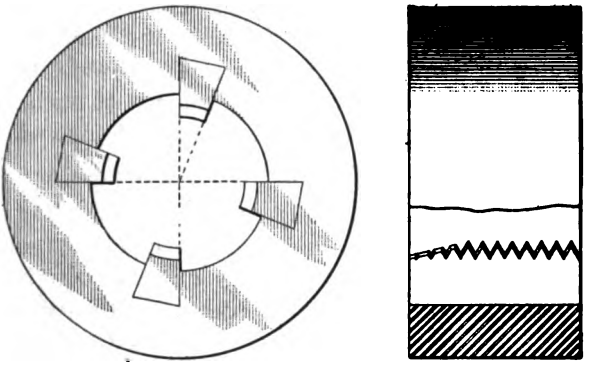

FIG. 2.

planed in a ring of suitable inexpensive material and dovetailed blades are well fitted to the slots, being made a driving fit therein. The blades are then faced flush with the sides of the holder; the thread is now cut in the lathe, the beginning of the thread chamfered off for three to four threads, as shown in the partial cross-section, and the blades, after being properly marked, are driven out. They are then relieved on the chamfered part, hardened, tempered, and driven home again in their proper places as marked.

For dies larger than 2-inch, the following proportions will serve as a guide, where d = diameter of screw; outside

diameter of die body = 2.4 to 2.5 d; inside diameter of die body = 1.3 d; length of blade = 1.25 d; width of lands, when four blades are used, as is recommended for general work, about one-sixteenth the circumference of the screw to be cut. When more blades are used, the lands must be made narrower. If the nature of the work demands it, the blades of an inserted-blade die may project somewhat beyond the faces of the die body. They should not project more than the width of the lands, however; otherwise they are liable to break off under the strain of cutting.

ADJUSTABLE DIES.

8. There is a great variety of **adjustable dies** made for general work. Since special sizes of these, for use in the ordinary die stocks, can be obtained of the makers for less than they can generally be made in the tool room, the toolmaker is rarely called on to make them. If such should be the case, there are generally dies at hand that will serve as a guide in making a special die.

9. Spring Die. — In many cases spring dies for screw-machine work are, for various reasons, made in the tool room, although, generally speaking, they may be bought more cheaply from concerns making a specialty of taps and dies.

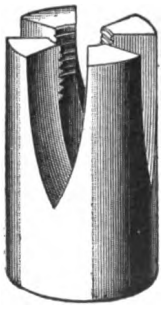

FIG. 3.

These dies are always used with a clamp collar that serves to adjust them. When a spring die is to be made, it is good practice to fit it to one of the clamp collars at hand, thus saving the expense of making a new clamp collar. Provide four cutting edges for general work, making the lands about one-sixteenth the circumference. Chamfer about three to three and one-half threads and relieve to give keen cutting edges. The depth of the thread may be about one and one-quarter times the diameter of the screw to be cut. For the cutting edges, use a 45° milling cutter that will split the die as shown in Fig. 3. Tap the die with a hob the same size as

the screw to be cut. After splitting the die, the burrs thrown up on the threads may be removed by running the hob through again. Finish the cutting edges by filing with a fine file, stamp the size and the number of threads on the die, and then harden as far as the end of the thread and temper to a deep straw color.

For accurate uniform threads, two dies must be used, one for roughing out and the other for the finishing cut. To do good work, the cutting edges must be kept sharp; dies made as shown in Fig. 3 can readily be sharpened by grinding the face of the lands on a suitable emery wheel.

10. Average proportions of spring dies are given in the following table, where all dimensions are given in inches. It is to be understood that the proportions given are intended only as a guide, and, hence, may be departed from to some extent to suit special requirements.

TABLE OF SPRING-DIE PROPORTIONS.

Size of Screw.	Outside Diameter.	Length.
$\frac{1}{8}$ to $\frac{1}{4}$	$\frac{1}{2}$	$1\frac{1}{4}$
$\frac{1}{4}$ to $\frac{3}{8}$	$\frac{3}{4}$	$1\frac{3}{4}$
$\frac{3}{8}$ to $\frac{1}{2}$	1	2
$\frac{1}{2}$ to $\frac{3}{4}$	$1\frac{1}{4}$	$2\frac{1}{2}$
$\frac{3}{4}$ to 1	$1\frac{3}{4}$	$2\frac{3}{4}$
1 to $1\frac{1}{4}$	2	3
$1\frac{1}{4}$ to $1\frac{1}{2}$	$2\frac{1}{2}$	$3\frac{1}{2}$
$1\frac{1}{2}$ to $1\frac{3}{4}$	$3\frac{1}{4}$	4
$1\frac{3}{4}$ to 2	$3\frac{1}{2}$	$4\frac{1}{4}$

When spring dies are to be used for work whose circumference is partly cut away, make the number of cutting edges as given in the table of Art. **1.** A cutter to suit the increased number of cutting edges will then have to be selected for slitting the die. The spring die is probably the cheapest adjustable die for screw-machine and turret-lathe work up to and including 2 inches in diameter, as far as

first cost is concerned. When threads larger in diameter are to be cut, it is usually more economical to use some form of adjustable die with inserted blades.

11. Inserted-Blade Adjustable Die. — One of the simplest designs of an adjustable die with inserted blades is that shown in Fig. 4. The blades are inserted exactly as in

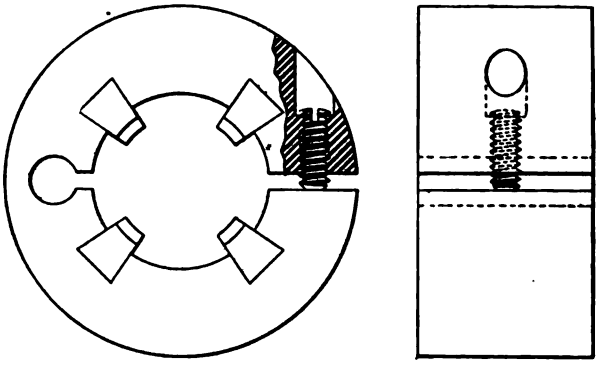

FIG. 4.

the die shown in Fig. 2; the die body is then split, as shown, and an adjusting screw put in. When this die is used in its holder, the setscrews of the holder will lock the die firmly together. Its only drawback is the necessity of removing the die from the holder every time it is desired to adjust it. This may be overcome, however, by cutting a hole through the holder in the proper place to allow the adjusting screw to be reached with a screwdriver. For very large dies, two adjusting screws may be provided, locating each near one of the faces.

The only thing that may prove difficult to one that has never done this before is the drilling and counterboring of the hole for the adjusting screw. This job may be done in a jig if a large number of dies are to be made; in case of a limited number, it may be done in a lathe or a milling machine, strapping the die body to the top of the slide rest or to the milling-machine platen. Using a two-lipped milling cutter of correct size, the counterbore can, by careful

feeding, be cut without much trouble. Drilling is then done while the die body is still strapped down, catching the drill in a chuck. If the die body has been split prior to drilling the hole for the adjusting screw, an iron or wooden shim should be inserted in the slot.

DIE HOLDERS.

12. For screw-machine and turret-lathe work, solid and adjustable dies are inserted in releasing die holders made on the same principle as a releasing tap holder. The die is held in the holder by three or four pointed setscrews that enter conical depressions, as shown in Fig. 5. These

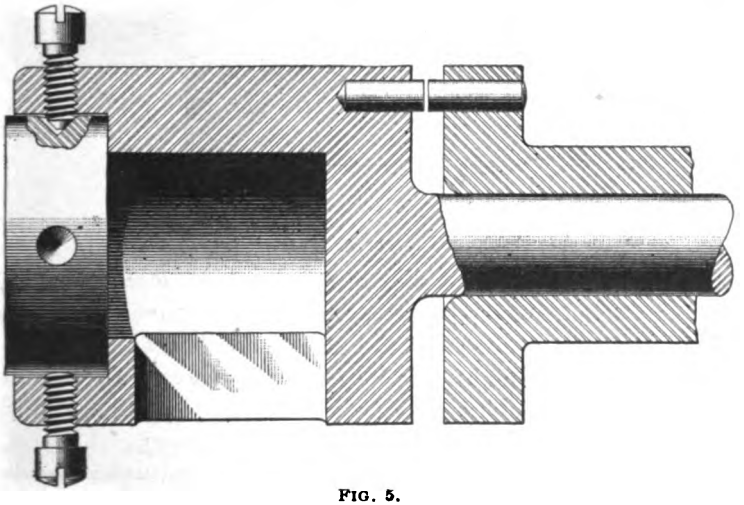

FIG. 5.

depressions are so located that the tightening up of the setscrews will draw the die against the shoulder of the holder. The length of the die holder naturally depends on the length of the screw to be cut. One or two liberal-sized openings should be cut through the holder back of the die, to provide for free escape of the chips. Practical considerations prohibit the use of the holder shown for very long screws. For these a releasing holder may be constructed in a somewhat

different manner, retaining the same principle of releasing and clutching for backing the die off.

13. A design for such a holder is shown in Fig. 6. It consists essentially of two parts, a shank *a* to fit the turret and a die holder *b*. The clutching and releasing mechanism

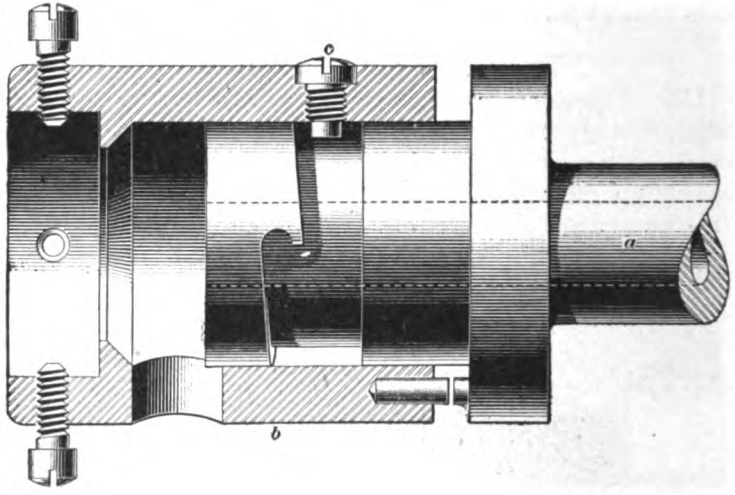

FIG. 6.

is contained in the front part of the device. For releasing, two stop-pins are employed; the one is driven into the holder and the other into the shank, as shown. The forward part of the shank is enlarged and grooved to receive the end of the backing pin *c*, which in the design here illustrated is firmly screwed into the holder proper. The forward side of the cylindrical groove forms a helix that serves to guide the backing pin into its place. The die holder proper is bored to be a good sliding fit on the front end of the shank. In the position shown, the clutch pins are disengaged and the holder is free to rotate about the shank. If the turret is now withdrawn while the work just threaded is revolving in a reverse direction, the backing pin *c* is guided into place, clutches the shank, and the die is unscrewed from the work. The shank has a hole drilled through it to admit the threaded work.

In designing such a holder, care should be taken to locate the backing pin and the groove so that the groove will not be uncovered when the backing pin clutches the shank. If the die holder is to be used for a right-hand die, the helical side of the groove must be right-handed, that is, as shown in the illustration. For a left-handed die, it must be left-handed. If desired, the device may be adapted to both right-handed and left-handed threads. To do this, the enlarged end of the shank is made long enough to receive two grooves; the front side of one is then made a right-handed helix, and the front side of the other a left-handed helix. A hole to receive the backing pin is drilled and tapped for each groove; the backing pin may then be changed from one groove to the other. A blank screw should be provided to fill the backing-pin hole not in use. Also provide one or two openings for the escape of chips. The helical side of the groove is most conveniently cut in an engine lathe geared to the correct pitch, which may be about one and one-half times the diameter of the backing pin.

REAMERS.

CLASSIFICATION OF REAMERS.

14. Reamers may, in accordance with their shape, be divided into three general classes. These are **straight reamers, taper reamers,** and **formed reamers.** Each of these classes may be divided into three subclasses, in accordance with their construction. These are *solid reamers*, *inserted-blade reamers*, and *adjustable reamers*.

Reamers are generally intended for the production of round smooth holes of accurate size. In some cases, they are merely intended to enlarge holes without particular reference to the holes being true and straight. Experience has shown that, in order to produce round and smooth holes, reamers must have their cutting edges spaced and formed

correctly. It must not be inferred from this statement, however, that there is but one correct way of spacing and forming the cutting edges; the required result may be arrived at in various ways.

CHATTERING.

15. Chattering, which is a common fault of reamers, is in itself an evidence of incorrect design or construction of the reamer. It is due to several entirely preventable causes, any one of which, when present alone or in combination with one or more of the others, will induce it. Whether a chattering reamer can be cured or not depends on its design and construction.

A knowledge of the causes that induce chattering of a reamer will indicate whether it can be cured or not. The causes of chattering are as follows:

1. Equidistant spacing of the cutting edges.
2. Excessive front rake of the cutting edges.
3. Excessive clearance of the lands.

If the cutting edges are spaced equidistant around the circumference, each edge will follow in the track of the others. Experience has shown that this condition is not conducive to the production of a round hole. Excessive front rake will cause the reamer to cut too freely, or "take a greedy bite," as it is called. This precludes the possibility of producing a smooth hole, since smoothness can be attained more readily by a scraping cut. Excessive clearance, or relief, of the lands robs the reamer of the support it should derive from them; consequently, it works unsteadily and with a wobbling motion.

SPACING OF CUTTING EDGES.

16. Two different systems of **spacing** are in general use, either one of which will tend to prevent chattering. One system is shown in Fig. 7. In this, the cutting edges

are spaced irregularly and no two edges are diametrically opposite each other. In order to show clearly the irregularity of the spacing, a supplementary dotted circle has been drawn and divided into equidistant divisions. Since no two edges are opposite each other, the diameter of the reamer cannot be measured by calipering and it can only be brought to size by fitting it to a ring gauge of correct size.

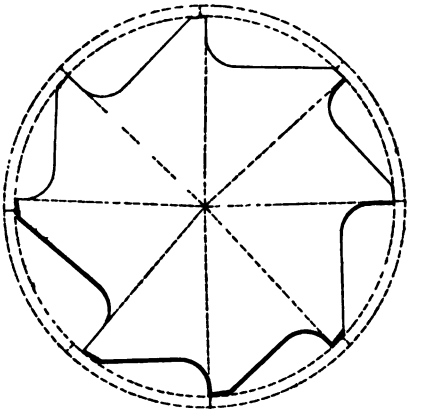

FIG. 7.

This drawback is overcome in the system of spacing shown in Fig. 8. Here the spacing is so arranged that any two opposite cutting edges are on the same diameter. Hence, the reamer can be calipered, and, for this reason, the general adoption of this system of spacing is recommended. While Figs. 7 and 8 show a section of a solid reamer, the methods of spacing shown apply to inserted-blade and adjustable reamers as well.

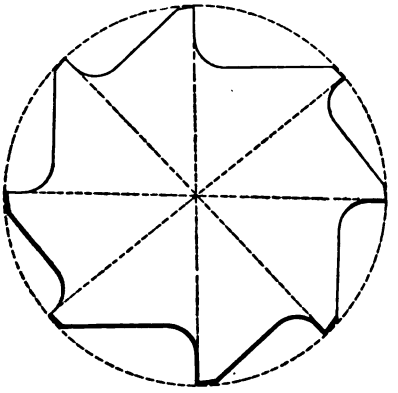

FIG. 8.

NUMBER OF CUTTING EDGES.

17. Fluted reamers for lathe and hand work, with the exception of rose reamers and special reamers designed to rapidly remove a relatively large amount of metal, are rarely given less than six cutting edges. For solid reamers, the number of cutting edges may be as given in the following table:

TABLE OF CUTTING EDGES FOR REAMERS.

Diameter of Reamer.	Cutting Edges.
$\frac{1}{8}$ to $\frac{1}{2}$	6
$\frac{1}{2}$ to 1	8
1 to $1\frac{1}{2}$	10
$1\frac{1}{2}$ to $2\frac{1}{4}$	12
$2\frac{1}{4}$ to 3	14

Generally speaking, there is nothing to be gained by giving a larger number of cutting edges than that given in the table.

18. In inserted-blade reamers, the largest number of cutting edges that can be given depends on the thickness of the blades. They are usually made with less cutting edges than solid reamers. It was believed formerly, and the view is still held by many, that a reamer must have an odd number of cutting edges in order to work well. Actual experience with properly formed reamers has demonstrated conclusively that, as far as truth, ease of working, and smoothness are concerned, it does not make the slightest difference whether the number of cutting edges is odd or even. On account of being able to caliper the reamer, an even number of cutting edges is really preferable. Rose reamers may be given from three to seven flutes, according to size. In the small sizes, they may be made without any teeth between the flutes, and, in the large sizes, may have one or two teeth between each flute.

FLUTING.

19. A form of flute that is very satisfactory is that shown in Figs. 7 and 8. This form of flute leaves the reamer very strong and, at the same time, by the absence of a sharp corner, reduces the possibility of the reamer cracking in the corner of the flutes in hardening. Another

good form of flute is that recommended by Brown & Sharpe, which is shown in Fig. 9. This form gives a greater clearance space than the flute with sides at right angles to each other. Milling-machine cutters for this form of flute may be obtained from the Brown & Sharpe Manufacturing Company. These cutters are to be set so as to give a slight negative rake to the cutting edge. To allow the negative rake to be seen plainly, two dotted diameters have been drawn in Fig. 9. When using this form of flute, the cutter must be set to such a depth that the land will be about one-fifth the average distance from one cutting edge to the next. If the flute is cut deeper, the cutting edges become too springy for good work. When flutes of the form shown in Figs. 7 and 8 are used, the lands may be about one-eighth the average distance from one cutting edge to the next.

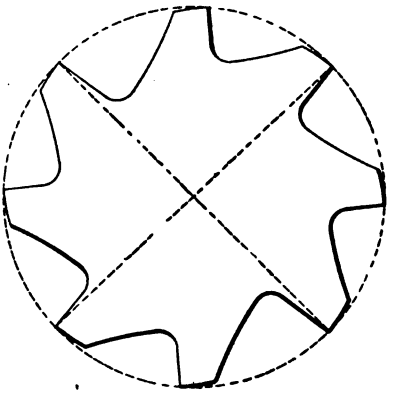

FIG. 9.

In general, a reamer will work more smoothly if the cutting edge is given a slight negative rake, since it will then take a scraping cut. The amount of negative rake need not exceed that shown in Fig. 9, which is about 5°. If the reamer is to be used entirely for steel, the cutting edges may be radial, like in Figs. 7 and 8.

CLEARANCE.

20. In order that the reamer may cut freely, the lands must be relieved back of the cutting edge. This relief can be given either by grinding the reamer with an emery wheel in a suitable fixture, or by oilstoning. The amount of clearance to be given depends on the purpose of the reamer. If it is to be used for roughing out, the clearance should be

more than is given to a finishing reamer. It should be least for a finishing reamer that is intended to keep its size for a long time. Fig. 10 shows the appearance of reamer teeth properly relieved for different purposes.

In Fig. 10 (*a*), the relief to be given to a roughing reamer is shown. If the lands are thus relieved, the reamer will

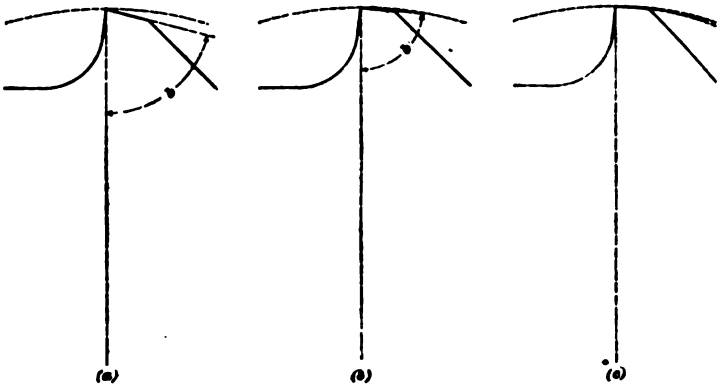

FIG. 10.

cut freely, but cannot be expected to make as true a hole or last as long as the reamer having its teeth relieved as shown in Fig. 10 (*b*). This latter form of relief leaves the cutting edge better supported, and, consequently, the reamer will work more smoothly and keep its size longer than with the form first shown. It will not cut as freely, however. Fig. 10 (*c*) shows the form of clearance to be adopted when it is important to reduce the wear of the reamer to a minimum in order to produce a large number of holes of the same size. As shown, the land is backed off on the arc of a circle. The amount of clearance at the back edge is made the same as in Fig. 10 (*b*), but, owing to the circular form of the relief, the cutting edge is supported better. If desired, roughing reamers may be backed off on the arc of a circle; however, this is more expensive than the flat backing off shown.

The amount that the back edge of the land should clear cannot be definitely expressed by any simple rule, since it

depends on several variable factors. As an aid in deciding what clearance to give, it may be stated that, for a roughing reamer, the angle *b*, see Fig. 10, may be about 80°. For a finishing reamer, the angle *b* may be from 85° to 88°, using the smaller angle for brass, which, in general, requires more clearance.

HELICAL CUTTING EDGES.

21. In order to prevent a reamer from drawing into the work, the cutting edges may be cut **helically,** choosing a left-handed helix for a straight reamer that is to turn right-handed. The helix should be such that the cutting edges will make an angle of about 15° with a plane passing through the axis of the reamer. Right-handed helical cutting edges are of advantage for taper reamers having a very coarse taper, and for formed reamers that differ considerably in their various diameters, as it will assist them to cut. Finishing taper reamers and finishing formed reamers may have their cutting edges left-handed, if made helical. Some toolmakers claim that if thus formed, owing to the shaving cut taken, they will produce a smoother and truer hole than can be obtained otherwise.

The advantages of helical cutting edges for straight reamers are somewhat doubtful, at least for general work; many toolmakers believe that the extra expense involved in making them is not justified by the results, claiming that, with reasonable care, just as true and smooth a straight hole can be obtained with a reamer having its cutting edges straight. Helical cutting edges for straight reamers are recommended when holes are to be reamed that are pierced crosswise by openings. All remarks previously made in regard to spacing, number, and clearance of cutting edges apply to helical cutting edges as well.

ALLOWANCE FOR GRINDING.

22. Since there is no way of preventing a reamer from warping in hardening, an allowance must be made to allow it to be finished by grinding. The amount to be allowed

for grinding depends on the length and diameter of the reamer; it is least for a short and most for a long reamer. For reamers up to $\frac{3}{4}$ inch, and not over 6 inches long, exclusive of shank, an allowance of .025 inch will usually prove ample, since there is no particular difficulty in straightening the reamer sufficiently to allow it to be trued with this allowance. For every $\frac{1}{4}$ inch the reamer is above this size, the allowance may be increased .01 inch, provided the reamer is not over 8 diameters long. If longer, the allowance for grinding should be increased.

GRINDING REAMERS.

23. For **grinding reamers,** a grinding machine is most convenient, although straight and taper reamers can be ground true by other means if the shop has no grinding

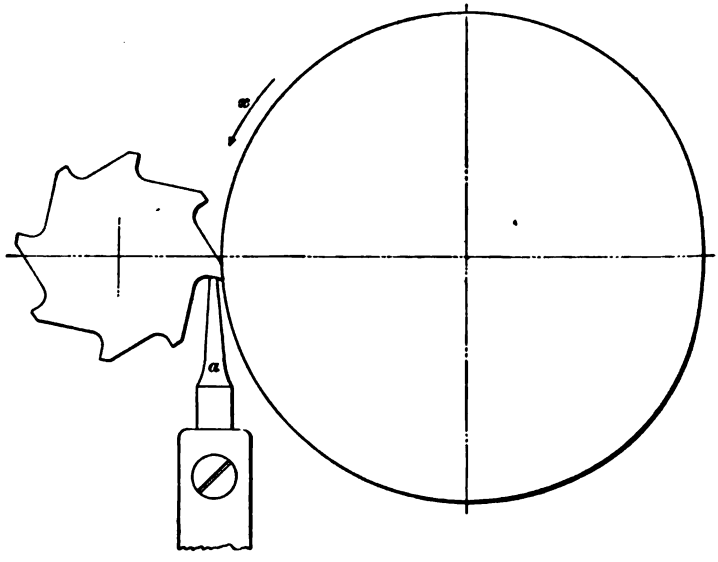

FIG. 11.

machine or grinding fixture for converting a lathe temporarily into a grinding machine. The reamer should first be ground to run true, revolving it between the centers. It

may be ground, according to its size, to within $\frac{1}{1000}$ or $\frac{2}{1000}$ inch of the finished size. The clearance is then ground with the emery wheel so set that its periphery will clear the front edge of the tooth succeeding the one being ground. The reamer is kept from rotating by a finger so adjusted that the correct clearance will be ground. The relative position of emery wheel, reamer, and guiding finger is shown in Fig. 11. The guiding finger *a* is fastened right in front of the wheel to the carriage that carries the emery wheel and travels along with it, thus always supporting the reamer tooth directly at the point where the wheel is cutting. The emery wheel should always rotate in such a direction that in grinding it tends to press the reamer tooth down on the finger, thus preventing rotation of the reamer during grinding.

The arrow *x* shows the correct direction of rotation of the emery wheel. As shown in the figure, the height of the finger is so adjusted that the cutting edge is *below* the line joining the centers of the reamer and emery wheel. The further the cutting edge is placed below the center line, the greater the clearance produced by the wheel; conversely, the nearer to the center line, the less the clearance. From this, it is seen that varying amounts of clearance can be obtained with the same wheel and on the same reamer by varying the height of the finger.

24. In grinding the clearance, the metal must be removed by a succession of light cuts, going successively around the reamer. It is of the utmost importance that the temper of the cutting edge should be preserved ; a heavy cut taken with a dry emery wheel is almost certain to anneal the cutting edge, thus rendering the reamer worthless. The clearance must not be ground up to the cutting edge; according to the size of the reamer, it may be ground to within from .01 to .02 inch of the edge. The reamer is then brought to a sharp edge and to correct size by oilstoning. For grinding the clearance, as large an emery wheel as the machine will handle should be used, since the larger the

wheel, the less concave the clearance will be. A small wheel will grind the clearance so hollow that the cutting edge will be deprived of support.

25. If no grinding machine or fixture is available, a straight or taper reamer may be ground in a lathe to run true. A piece of free-cutting oilstone, preferably of Washita stone, is held in the tool post. The reamer is revolved *backwards* at a high speed and the oilstone brought up by means of the cross-feed screw until it slightly engages the reamer. The carriage is then rapidly moved back and forth by hand; if freely lubricated, the oilstone will gradually cut the reamer down until it is round and true. Clearance is given entirely by oilstoning at a right angle to the axis of the reamer. The method here given is naturally very slow and expensive and is to be recommended only as a makeshift. It is doubtful whether a reamer can be made as round and true by it as can be done by a grinding machine, or by means of a proper grinding fixture.

GROOVING REAMERS.

26. A reamer can be **grooved** most rapidly in a milling machine with a suitable cutter. As a makeshift, the grooves can be planed in the lathe, shaper, or planer. This is not recommended, however, except when no milling machine is available.

Suppose the method of spacing in which any two opposite teeth are on the same diameter has been selected. Then, the grooves are most advantageously cut in pairs; that is, after milling one groove, the one diametrically opposite is cut before passing to the adjoining one. This is recommended on account of the saving in labor accomplished by it. In the method of spacing selected, any two opposite grooves will have the same depth, and any two adjoining grooves will differ in depth. Consequently, by adopting the method of cutting the grooves in pairs, the number of times the cutter must be reset is reduced to one-half of what it would be when cutting one groove after another.

27. The irregularity of spacing is obtained by moving the index pin a different number of holes for each adjoining pair of grooves. The irregularity introduced need not be very large; one that will cause the cutting edge to diverge by 2° to 4° from the angle corresponding to an equal division will be sufficient.

An example will show how the irregularity is introduced. Suppose we wish to cut a reamer with 8 cutting edges, and that the milling machine available requires 40 turns of the index pin for one revolution of the index-head spindle. Then, with the index pin adjusted to the circle having 20 holes, $20 \times 40 = 800$ holes must be passed over for a complete revolution of the reamer, and $800 \div 8 = 100$ holes for dividing into eight equal divisions. As a movement of 800 holes causes the work to revolve through 360°, the angle through which it is revolved by a movement of 1 hole is $\frac{360}{800} =$ say $\frac{1}{2}°$, or .5°.

If we wish to introduce an irregularity of 2°, it needs a movement of $\frac{2}{.5} = 4$ holes. Then, by a judicious selection, we arrange the number of holes to be passed over for each division. For instance, we may use successively 95, 99, 103, and 101 holes for adjoining grooves, and, after cutting each groove, give 20 turns to pass to the opposite one. With this number, the greatest difference between adjoining gooves is that corresponding to $101 - 95 = 6$ holes, which is about $6 \times \frac{1}{2} = 3°$. If the number of holes selected for successive grooves had been 98, 102, 106, and 94, the greatest difference between adjoining holes would have been that corresponding to $106 - 94 = 12$ holes; or $12 \times \frac{1}{2} = 6°$. In selecting the holes, it must be remembered that the sum of the holes must be equal to one-half the number of holes required for a whole revolution of the reamer. Consequently, the number of holes required for the last groove is equal to the difference between the sum of the preceding ones and the number of holes required for one-half of a revolution of the work.

The moves that are to be made successively in order to

obtain the spacing are as follows for the particular division and spacing selected: Referring to Fig. 12, to cut the first groove, none; to cut the fifth groove, 20 complete turns of the index pin; to cut the fourth groove, 95 holes, or 4 turns and 15 holes; to cut the eighth groove, 20 complete turns; to cut the seventh groove, 99 holes, or 4 turns and 19 holes; to cut the third groove, 20 complete turns; to cut the second groove, 103 holes, or 5 turns and 3 holes; and to cut the sixth groove, 20 complete turns. A movement of 101 holes, or 5 turns and 1 hole, will bring the cutter to the fifth groove again, and 20 complete turns to the first groove.

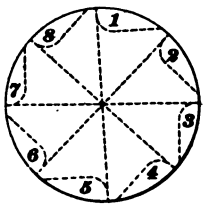

FIG. 12.

When making a solid reamer, it is necessary to go around twice, sinking the cutter in deep enough the first time to distinctly mark the position of the cutting edge. When back to the first groove, the cutter may be sunk deep enough to give the proper width of land, which can be determined readily if the position of the cutting edge of the adjoining groove is known. Then, after cutting grooves *1* and *5*, the cutter must be reset to the proper depth for grooves *4* and *8*, *7* and *3*, and, finally, *2* and *6*. If the grooves are helical, the spacing is obtained in just the same manner.

28. It must not be inferred that it is necessary to use the 20-hole circle for an 8-grooved reamer, or that the number of holes passed over for each division must be just as given in the preceding discussion. The numbers of holes and the 20-hole circle have been arbitrarily selected in order to illustrate the principle involved.

TEMPER OF REAMERS.

29. The cutting edges of a reamer may be tempered to suit the service to be performed. When the reamer is to remove a relatively large amount of metal in one operation, the cutting edges should be soft and tough enough to stand

the strain of cutting; when a reamer is intended for finishing and accurate sizing of holes, where it has to remove only a very small amount of metal, it can advantageously be made quite hard. A roughing reamer, after being hardened so that a file will not touch it, may be drawn to a full straw color, while a finishing reamer may be left a pale straw color. If the finishing reamer is intended for very light service, and if it is essential that the wear of the reamer be reduced to its lowest limit in order to make a large number of holes uniform in size, it may even be left as hard as fire and water can make it, provided, of course, that the steel is not heated hot enough to burn it.

TAPER REAMERS.

30. If intended for finishing, **taper reamers** are made on the same principles that govern the construction of straight reamers. Roughing taper reamers are often made in the same manner, but with right-handed helical cutting edges. If the taper of the reamer is at all large, the roughing reamer may be made as shown in Fig. 13. This con-

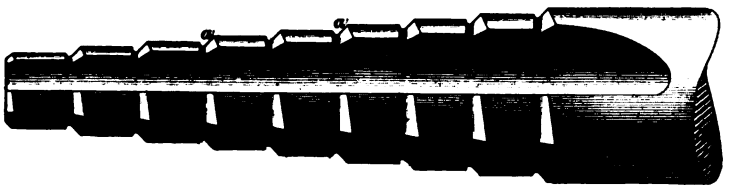

FIG. 13.

struction is an extension of the principle on which a counterbore is based; in fact, each step in conjunction with the adjoining one forms a counterbore. All cutting is done at the forward end of the steps; the cutting edges, as *a*, *a*, are formed by backing off with a file. The parts of the cylindrical surface of each step, which remain after the grooves are cut, are left cylindrical; no clearance is given, as they serve the purpose of guiding the succeeding cutting edges.

The reamer may be given four cutting edges, which may be cut with a milling cutter suitable for a tap of the same size.

If the reamer is to be used for brass or cast iron, the flutes may be made straight, as shown in the figure; if it is to be used for roughing wrought iron and steel, the flutes may be helical, using a right-handed helix of such a pitch that it will make an angle of about 15° with a plane passing through the axis. The reamer being intended to turn right-handed, the cutting of right-handed helical flutes has the effect of giving keen cutting edges, which will make the reamer work easily; at the same time, the chips are crowded back toward the shank. When turning up a stepped reamer, it is advisable to neck it down a little with a round-nosed tool at the end of each step. When grinding, the grooves allow the grinding wheel to pass entirely over the surfaces, and, furthermore, they make it easier to sharpen the cutting edges. The cutting edges are backed off by filing before hardening; when grinding the steps, the extremity of the cutting edges of each step can be trued at the same time, removing as little metal as possible. They are finally brought to a sharp edge again by careful hand grinding on a beveled emery wheel, or by oilstoning.

Stepped reamers may also be made of suitable form to rough out holes that are to be finished with formed reamers. The number of steps that are to be used for a stepped reamer must be decided separately for each particular case, bearing in mind that the greater the number of steps for a given length of reamer, the less work will be left for the finishing reamer.

31. If a number of taper reamers of the same size and taper are required, and especially if they are constantly in use and must frequently be reground or replaced, a gauge to which they can be fitted becomes an absolute necessity. The gauge may be a hole of proper size and taper in a cylindrical piece of tool steel that has been hardened and ground. With careful use, such a gauge will last practically a lifetime.

ENLARGING WORN SOLID REAMERS.

32. In spite of the most careful use, reamers will wear, and hence will ream holes smaller than the standard size for which they were made. The question of when a reamer has worn enough to become unserviceable must be decided on its own merits in each particular case; it is utterly impossible to lay down any rule for it. When a finishing reamer has worn down too much, it may either be converted into a roughing reamer, or be restored to its former size by annealing it and then upsetting it sufficiently with a round-nosed calking tool to allow it to be reground to its former size after hardening. To upset it, the reamer may be held between lead jaws in a vise; the calking tool is then applied to the face of the cutting edges, a little below the edge. When driven into the face with a hammer, it forces the edge outwards, thus making the reamer larger in diameter. This operation of enlarging a worn reamer can rarely be done more than once.

SHELL REAMERS.

33. **Shell reamers** may be given the same number of teeth, and have their cutting edges formed in the same manner as any solid reamer. In making a shell reamer, it is well to make the hole slightly smaller and then grind it to correct size after hardening and tempering. The hardening process is likely to change the diameter of the hole, and is sure to throw it out of round; hence, in order that the reamer may fit its arbor well, the hole must be ground. The cutting edges may then be ground while the reamer is mounted on its arbor. If the reamer is worn below size, it may often be restored by the means described in Art. **32**; however, since it is not possible to tell whether the hole will enlarge or become smaller, there is no certainty about whether it can be used on the same arbor afterwards. If the hole is made tapering, it can usually be done; if the hole is straight, this is rather uncertain.

ROSE REAMERS.

34. As **rose reamers** cut on the end only, the grooves with which they are to be provided along their cylindrical surface need not be of the same shape as those of other reamers. A semicircular milling cutter having a width equal to about one-quarter the diameter of the rose reamer will cut an excellent groove, the depth of which may be about two-thirds the width of the cutter. After hardening and tempering, grind and leave the cylindrical part truly circular. True up the extreme cutting edges at the same time and bring to a sharp cutting edge again by careful grinding on a beveled grinding wheel, or by oilstoning.

35. Rose reamers for small work can be made advantageously of drill rod, which can be obtained very closely agreeing with the diameter corresponding to its nominal size. Commercial drill rod in sizes up to No. 1, Brown & Sharpe drill gauge, will rarely vary more than $\frac{1}{1000}$ inch from its true size and be surprisingly straight. Such small rose reamers are often made without flutes, and answer quite well where extreme accuracy is not required. Furthermore, they are quite cheaply made in a speed lathe and, since they are hardened only at the very cutting end, need no grinding for ordinary work. When making small reamers from drill rod, it is advisable to neck them down back of the cutting edge, as shown in Fig. 14; the diameter at the neck may be from $\frac{8}{1000}$ to $\frac{4}{1000}$ inch smaller than the rod. It has been

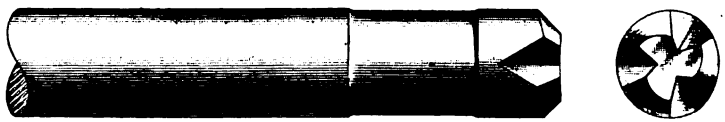

FIG. 14.

observed when hardening drill rod at the end, that it will often swell, that is, become slightly larger in diameter, directly back of the hardening. By necking down the rose reamer where the swelling is likely to occur, any danger of having the reamer bind in the hole is obviated.

Rose reamers made of drill rod up to and including No. 1 gauge size may be given three cutting edges. After beveling the end of the reamer in the lathe, the flutes may be filed in with a three-square file, preferably filing them as shown in the illustration, which has purposely been enlarged in order to show the cutting edges clearly. If thus made, the reamer, while cutting, will tend to push the chips ahead; this feature contributes to the smoothness of the hole reamed by it, since there is little danger then of the flutes becoming clogged. After giving clearance to the cutting edges, harden at the very end and temper. A very smooth hole can be obtained if the outer corner of each cutting edge is slightly rounded over with an oilstone.

CHUCKING REAMERS FOR ROUGHING.

36. While rose reamers are commonly used in screw machines, chucking machines, and lathes for roughing out cored holes, they are really better adapted to finish reaming. Other forms of reamers are better adapted to roughing out, as they will cut much faster and be more economical in maintenance. One of the best reamers for roughing out cored holes in chucking work is a reamer that may be called a **multiple-lipped twist drill,** made with three or four cutting edges. They are usually made as shell reamers in the larger sizes, and as solid reamers in the smaller sizes. The flutes are cut on a right-handed helix of such pitch as to give the cutting edges an angle of about 15° with a plane passing through the axis. An end view of a four-lipped twist drill is shown in Fig. 15.

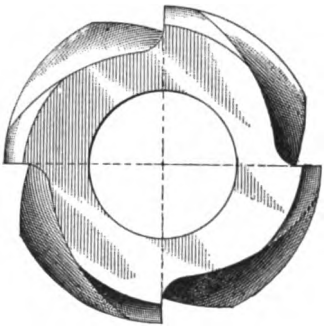

FIG. 15.

Milling cutters suitable for making this form of groove can be obtained of the Brown & Sharpe Manufacturing Company, Providence, Rhode Island, on regular order for

sizes up to 3 inches. These drills are sharpened, like twist drills, by grinding on the ends. They are made like rose reamers with no relief given to the lands between the grooves, the lands serving to guide the reamer straight. The helical grooves give keen cutting edges and insure that the reamer clears itself of chips. If made as a shell reamer, the hole must be ground to size after hardening and tempering. The outside may then be ground to size, with a taper of about .001″ to the inch, being smallest at the back end, to prevent roughing up or binding in the hole, while the reamer is mounted on its own arbor. As reamers of this kind are intended for roughing out, it is unnecessary to grind them to correct size within a fractional part of a thousandth of an inch. This applies to other roughing reamers as well. For a four-lipped twist drill, the width of the lands may be about one-tenth the diameter of the drill. The hole, if the reamer is made as a shell reamer, should in general not be larger than one-half the outside diameter. The grooves may be spaced slightly irregular, preferably so that opposite cutting edges are on the same diameter. For small work, three grooves will work fairly satisfactorily.

ADJUSTABLE REAMERS.

37. Reamers are made **adjustable** within narrow limits for two different purposes. In the first place, reamers are made adjustable for the purpose of readily taking up the wear and allowing several sharpenings without losing the standard size. Such reamers are purposely so made that the size to which they are set cannot be varied without machine work, the idea being to keep the user from tampering with the size. On the other hand, reamers may be made adjustable for the purpose of allowing the diameter of the hole reamed by them to be slightly varied either way from the standard size. They are then made to be adjusted by the user, while the former is adjusted by the toolmaker. To distinguish between the two designs, many toolmakers confine the term **adjustable reamer** to reamers that cannot be

adjusted without machine work, and call a reamer intended for varying the diameter of the hole an **expanding reamer.**

38. There is an infinite number of designs possible for making a reamer adjustable. Some of these are shown; these designs are not offered as finality, but as suggestions. In general, the smaller sizes of adjustable and expanding reamers can be bought of the manufacturers more cheaply than they can be made, and it is only in the larger sizes or in special reamers that there is any economy in making them in the tool room.

39. The design of reamer shown in Fig. 16 is an adjustable reamer. It consists of a body containing a number of dovetailed grooves cut at an inclination to the axis. Blades that form the cutting edges are carefully fitted to these slots. These blades butt against the shoulder of the collar *a* at the back end and are firmly held against it by the locknut *b*. In order to show the blades clearly, the locknut has

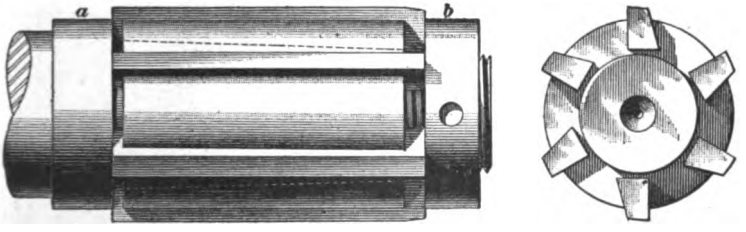

FIG. 16.

been omitted in the end view. When the reamer has worn sufficiently below size to make it unserviceable, the nut *b* is loosened, the blades are partially driven out, and the shoulder of the collar *a* is faced off sufficiently to make the reamer slightly over size when the blades are driven home again. The blades are then reground and stoned to standard size.

The design shown can readily be converted into an expanding reamer by placing a nut in the place occupied by the collar *a*. By varying the position of the two locknuts, the blades can then be expanded or contracted slightly. In

designing such a reamer, it is well to bear in mind that the range of expansion for a given longitudinal movement can be increased by making the inclination of the slots with the axis greater. The slots are usually planed in on the planer or shaper. This, in general, is cheaper than milling them.

40. The design shown in Fig. 16 is suitable for holes that pass clear through the work. If the hole is blind, however, it cannot be reamed to the bottom, since the locknut projects beyond the end of the blades. The design shown in Fig. 17 may then be adopted. In this, the slots are

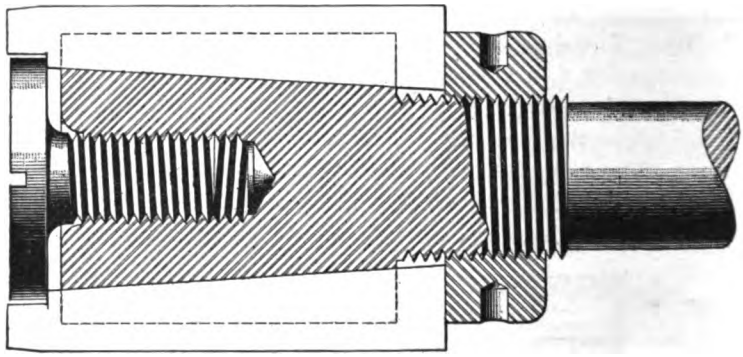

FIG. 17.

inclined the opposite way from that shown in Fig. 16. Instead of a locknut, a flat-headed screw is used at the front end, which bears against a shoulder on the under side of the blades. By means of this screw and the locknut at the back, the blades may be forced outwards or drawn inwards. The design illustrated is for an expanding reamer; it may readily be used for an adjustable reamer by making the locknut at the back end screw against a shoulder. In that case, to adjust it, the shoulder is turned down; the back nut is then screwed tight against it and the front screw hove up in order to lock the blades.

41. An inserted-blade expanding reamer of somewhat different construction is shown in Fig. 18. In this design, the blades are flat and consequently easily fitted. The

blades are beveled at the front and back; the slots that receive the blades are also beveled at the back end. A central tapered pin bears against the bottom of the blades; by screwing the pin in or out and screwing up the locknut, the blades are forced outwards or drawn inwards. The blades, after hardening and tempering, require to be ground flat and parallel on the sides; they must be a good fit in the slots. The inner face of the blades, which bears against the taper pin, should also be ground straight on a surface grinder. The taper pin may be hardened and drawn to a purple color; it should then be ground true. After assembling the reamer, adjust the pin and locknut so as to be midway between its two extreme positions and then grind the outside to standard size. Relieve and taper off the ends as in any other reamer. The locknut may preferably be hardened, but the body of the reamer should be left soft. The body should be made of tool steel in the smaller sizes, i. e., for sizes below $1\frac{1}{2}$ inches. Above this size, it may be made of machinery steel. The design shown in Fig. 18 is suitable for reamers from $\frac{3}{4}$ inch up.

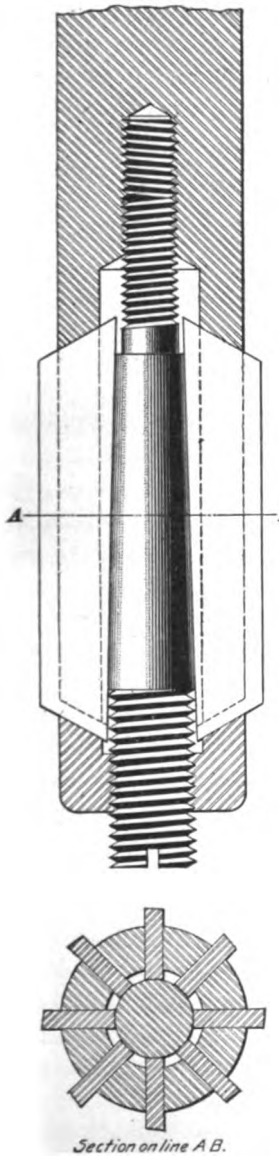

FIG. 18.

42. The most common forms of expanding reamers are shown in Fig. 19. In both designs, the reamer is made at first exactly as if it were a solid reamer; an axial hole is

then drilled and tapped for the adjusting screw, and, finally, the reamer is split. Referring to Fig. 19 (*a*), the reamer is split at the end. Screwing the taper-headed screw inwards

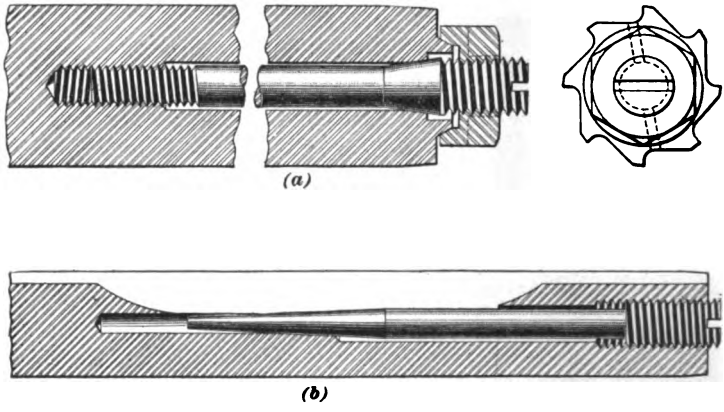

FIG. 19.

expands the reamer; it is then locked by the locknut shown. This reamer becomes large at the end.

In the design shown in Fig. 19 (*b*), the end is left solid, but the reamer is split by sinking in a narrow milling cutter right back of the end. The slots may commence at a distance from the end equal to about one and one-half times the diameter of the reamer. The length of the slots should be about four times the diameter of the reamer. The number of parts into which the reamer is split varies with the diameter. Reamers up to $\frac{3}{8}$ inch may be split into two parts; up to $\frac{3}{4}$ inch, into three parts; and above that size, into four parts.

Split expanding reamers are the cheapest expanding reamers to construct; they are open to the objection, however, that expanding does not change their diameter uniformly throughout their length. Whether this objection is serious enough to prohibit their employment for a particular case must be decided upon the merits of the case.

The diameter of split expanding reamers depends on the service expected of them. If they are made expanding simply

in order to be able to ream holes to a standard size, they should originally be ground and stoned to the standard diameter. If they are intended to ream holes at will slightly above or below standard size, they must be made slightly under the standard size.

FORMED REAMERS.

43. When holes that are neither straight nor conical (tapering) are to be finished by reaming, so-called **formed reamers** must be used. Some shapes of formed reamers can be readily ground in the ordinary grinding machine; others, again, require special apparatus for their production. Formed reamers in general are avoided as much as possible, as they are very expensive in first cost and exceedingly difficult to duplicate if a great degree of accuracy is required. There are some jobs, however, that simply cannot be done without them; in that case, the toolmaker must use his ingenuity as to the best way of grinding them to correct size and shape.

FOUR-SQUARE REAMERS.

44. If a long hole is to be finished very true and very smooth, as, for instance, the bore of a rifle barrel, a type of reamer differing entirely from any shown heretofore must be used. This type, which is shown in Fig. 20, is very little known outside of armories, where it is used practically to the exclusion of all other reamers for the purpose of finish-reaming the bore of gun barrels. It is well adapted to similar machine-shop work.

The reamer is made of square tool steel. The four sides are hollowed out, as shown in the end view. If the reamer is large, this may be done in the milling machine, shaper, or planer; for small reamers, it may be done by filing. The reamer is then hardened and tempered and ground on the surface grinder, grinding the corners only, until it is perfectly straight and parallel. Its diameter across corners is

made $\frac{3}{1000}$ to $\frac{4}{1000}$ inch smaller than the diameter of the hole to be reamed. It is then stoned carefully to give very smooth edges, using the finest grade of Arkansas oil-stone. The extreme ends are slightly tapered off by stoning. In use, a slip of hard wood, as *b*, which extends the whole length of the reamer, is inserted between one side of the reamer and the walls of the hole. This causes the edges *a*, *a* to cut. After passing through the hole, a strip of tissue paper is placed between the reamer and the slip of wood; this causes the reamer to take another cut. This is repeated until the hole is the correct size. Copious lubrication is essential to good work. The slip of hard wood may be confined longitudinally by two pins, as shown. A reamer of this kind is suited only for removing minute amounts of metal. But, on the other hand, it will produce a degree of finish that cannot be excelled by any other kind of reamer. It requires pulling through the hole in order to work best. A four-square reamer may be made without hollowing out the sides; it is then, however, more difficult to sharpen when worn. The length of a four-square reamer may be about eight times its diameter.

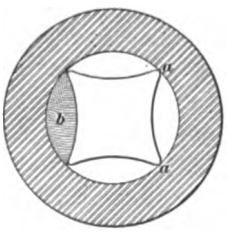

FIG. 20.

FRONT CHAMFER.

45. Straight reamers intended to cut at their ends only, like rose reamers and chucking reamers, are to be made with a very slight taper for clearance.

This taper is so slight that the part back of the cutting edges still serves as a guide. Straight reamers that have their cutting edges formed on their circumference require the front end to be slightly **chamfered** off in order that they may enter the hole easily.

COUNTERBORES.

46. The design of a **counterbore** depends on several conditions, which are: the nature of the metal it is to be used for, the range in the size of holes to be counterbored, the number of holes to be counterbored, and the distribution of metal around the hole.

SOLID COUNTERBORE.

47. When a counterbore is to be used for a relatively small number of holes and is to be thrown away after serving its purpose, it is advisable to adopt a cheap construction in order to reduce first cost to the lowest limit. Probably the cheapest counterbore that can be made is the **two-lipped flat counterbore** with a solid teat, which is shown in Fig. 21. This can be forged very near to shape, and needs

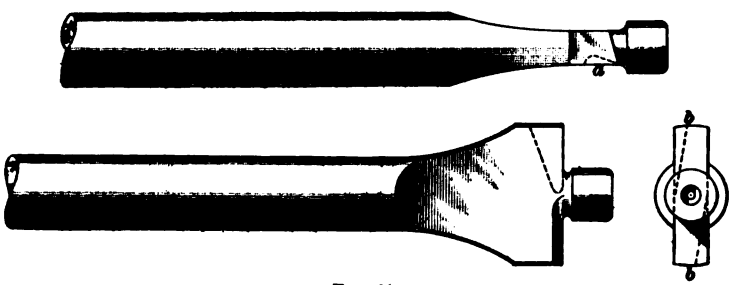

FIG. 21.

but little machine work and filing to make it serviceable. After forging, center at both ends; turn the shank to the required size; then reverse and turn up the teat, finishing it with a fine file. Turn the counterbore to correct size and

face the cutting edges. Finish by filing the sides smooth and give clearance to the cutting edges. If the counterbore is to be used for wrought iron or steel, a keen cutting edge may be given by filing as shown at *a* in dotted lines. For cast iron and brass, it is better to leave the cutting edges without any front rake. A slight relief may be given to the faces *b*, *b* to prevent them from binding in case the countersinking is to be carried to an appreciable depth. If the counterbore is intended only for squaring up the face around a hole, no relief need be given to *b*, *b*. Only the cutting edges need be hardened; they may be drawn to a straw color. The process of hardening leaves the teat hard; some toolmakers draw the end of the teat to a blue color by inserting it into red-hot lead for the purpose of preventing its breaking off. Since the teat is most liable to break off close to the cutting edges, however, and since it cannot be drawn to a spring temper clear up to the edges without partially softening them, many toolmakers believe that it is a waste of time to draw the teat to a higher color than the cutting edges.

48. When a hole is drilled close to a projection, and when it is required that the counterbore should cut part of the projection away, it is better to use a counterbore with four cutting edges. This may be turned down from bar tool steel and have its cutting edges formed by cutting grooves with a 60° cutter in the milling machine. The grooves may be cut on a right-handed helix, making an angle of about 15° with a plane passing through the axis of the counterbore if it is intended for wrought iron and steel. For brass and cast iron, the grooves may be straight. The cutting edges are to be given clearance by filing; it is advisable to give clearance to the lands also. The counterbore will then have much less tendency to spring from the projection while cutting part of it away.

49. Solid counterbores, while cheap in first cost, are open to two serious objections. In the first place, they are difficult to sharpen; in the second place, they are limited in

their range to holes as large as the teat or larger. They can be adapted to holes larger than the teat by forcing a bushing over it. As it is rather difficult to remove the bushing, this method of making a counterbore adapted to several sizes of holes can only be considered as a makeshift, especially as the difficulty of properly sharpening it is retained. Two-lipped and four-lipped solid counterbores are sharpened by grinding—on the sides, in case of a two-lipped counterbore, and on the flat side of the grooves in case of a four-lipped counterbore.

BUILT-UP COUNTERBORES.

50. Inserted-Teat Counterbore.—The counterbore shown in section in Fig. 22 overcomes the objections raised against the solid counterbore. It is slightly more expensive to make, but will serve for a greater variation in size of hole than any other. In addition, it can be sharpened very easily. As shown in the figure, it has a central hole bored to receive the shank of the teat, which is held in place by the setscrew. After turning the outside, the central hole

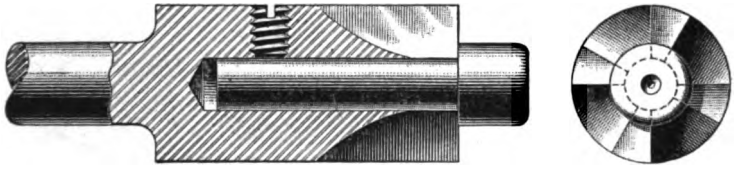

FIG. 22.

may be bored true and reamed, running the large end of the counterbore in the steady rest. The grooves may then be cut between centers in the milling machine, or the counterbore may be held in a chuck, as is most convenient. A 60° milling cutter should be used if four cutting edges are given. For wrought iron and steel, the grooves may be cut along a right-handed helix; for brass and cast iron, they may be straight. After hardening and tempering, the hole should be lapped out; teats of the desired sizes may then be turned and fitted to the counterbore. These teats

may be hardened at the end and drawn to a straw color. Unless the counterbore is used for exceptionally fine work, there is little need of grinding the teats to run true. As they are to be hardened at the extreme end only, there is little likelihood of their springing sufficiently to interfere with the working. The shank of the teat should be a good sliding fit, so that it may be easily removed when the set-screw is loosened. The counterbore can readily be sharpened by grinding on the end after the teat is removed.

51. Inserted-Cutter Counterbores.—When but very few holes of a special size are to be counterbored, and there is little likelihood of the counterbore ever being wanted again, the simple form shown in Fig. 23 may be adopted. Its chief recommendation is its cheapness. The objectionable feature is that it can take but a relatively light cut, which requires careful feeding to prevent breakage of the cutter. It consists of a bar that fits the hole to be counterbored, and a cutter driven into a circular hole drilled clear through the bar. For small counterbores, the cutter may be made of drill rod. Referring to Fig. 23, after the bar is turned to a fit, the hole for the cutter is drilled and reamed

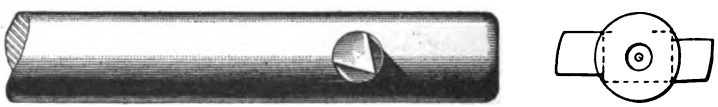

FIG. 23.

and a blank piece of drill rod of sufficient length driven in. This is then turned to the correct diameter and faced on the front side. It is next driven out of the bar and filed to a cutting edge, as shown, giving front rake for wrought iron or steel. The cutter is now hardened all over and driven home again.

52. For large work, a counterbore may be made as shown in Fig. 24. The bar is slotted and a flat cutter is closely fitted to it; the cutter is confined by a key, as shown. A moderate range of variation in the diameter of

the counterbored hole is obtained by setting the cutter out of center. The cutter is readily sharpened. Whether to harden the end of the bar or not must be decided upon the merits of the case. Many toolmakers believe that it is

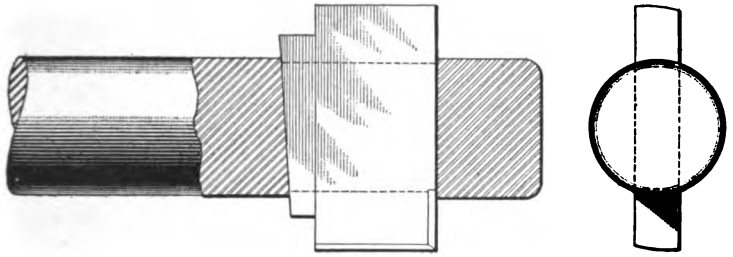

FIG. 24.

the best plan to leave the end of the bar soft and to turn it down sufficiently to receive a hardened bushing that is a good snug fit and kept from turning by a pin.

HOLLOW MILLS.

SOLID HOLLOW MILLS.

53. Hollow mills are chiefly used for screw-machine and turret-lathe work for roughing down and finishing stock

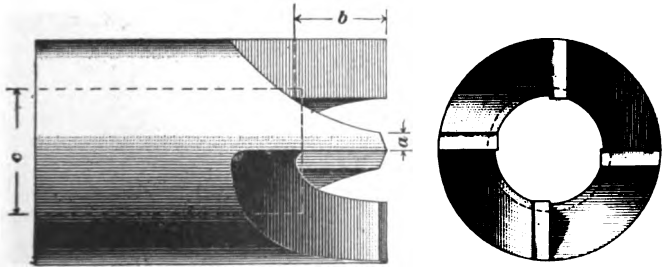

FIG. 25.

preparatory to threading. When intended for finishing, they are usually made adjustable. For roughing out, solid mills are preferred, since, in general, they are not as

springy as adjustable mills. Hollow mills may be made in a great variety of forms. For small work, the most common form is the solid mill shown in Fig. 25. This is commonly made with four cutting edges formed by milling with a side milling cutter of about double the outside diameter of the mill. In order that the mill may work easily, it must be relieved inside by filing it as shown. The rear of the mill is to be bored larger in diameter than the cutting end. This allows it to clear on long cuts, and, at the same time, makes it easier to file the clearance. In making the mill, it is advisable to mill out the cutting edges before giving the clearance inside; if this is done, the clearance can be filed more rapidly, since there is then but a relatively small quantity of metal to be removed. The milling cutter is to be set by trial until it makes *a* about one-sixth the inside diameter and *b* about eight-tenths of the inside diameter. The back of the mill may be bored about one and one-fifth times the diameter at the front end. The faces on which the cutting edges are located are usually spaced equidistant and lie in planes passing through the axis. The mill is hardened as far back as the end of the milling and drawn to a straw color from the back, setting it on a red-hot piece of iron. All sharpening is done by grinding on the end.

54. An adjustable hollow mill may be constructed in the same manner as the adjustable spring die shown in Fig. 3, using a clamp collar to adjust it.

INSERTED-BLADE HOLLOW MILLS.

55. For large work, hollow mills may be made with inserted blades, constructing them if desired non-adjustable in the same manner as the solid die shown in Fig. 2. If desired adjustable, a design similar to that shown in Fig. 4 may be adopted.

56. A very good design of a hollow mill with removable blades and adjustable for sizes within narrow limits, is shown

in Figs. 26 and 27. Fig. 26 shows the mill taken apart; Fig. 27 shows it assembled.

The mill consists essentially of a body *a* in which a number of slots, as *b*, are cut at an inclination to the axis. These slots receive the cutters *c*, *c*, which are a loose fit in them.

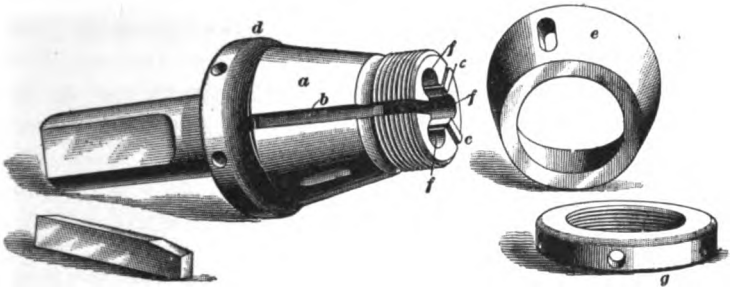

FIG. 26.

The cutters are rectangular in cross-section; their rear end butts against the adjusting nut *d*. They are held in place by a tapering collar *e*, which surrounds them and is pushed home by a locknut *g* located at the front end. The inside of the collar *e* is bored out sufficiently large to clear the body *a* and to fit the outside of the cutters, which extend slightly above the tapered surface of *a*. Clearance spaces

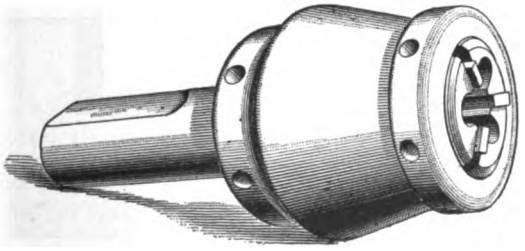

FIG. 27.

for the reception of the chips are cut between the slots, as shown at *f*, *f*. These clearance spaces communicate with the outside by an opening cut through the body and a corresponding opening in the collar. To set the mill to a smaller size, the locknut *g* is loosened in order to loosen the cutters.

These are then pushed forwards, and, consequently, closed in by turning the adjusting nut *d* forwards. Tightening the locknut forces the taper collar over the cutters and thus locks them. In order to set the mill to a larger diameter, the cutters are loosened by unscrewing the locknut; the nut *d* is then turned back and the cutters pushed against it by hand. They are locked again by screwing the locknut home.

A hollow mill constructed in accordance with this design is rather expensive as far as first cost is concerned. It is very economical in its maintenance, however, since new cutters can be made for it at a very slight cost. By making the cutters of suitable shape, the mill can be adapted to a limited range of sizes.

57. When making the mill, it is advisable to cut the bottom of the slots at the same distance from the axis, in

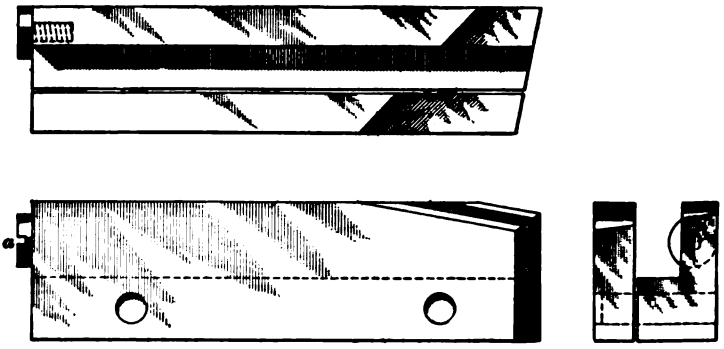

FIG. 28.

order that the cutters may all be alike. After the first set of cutters has been made, a filing jig may be constructed, in which spare cutters can be filed exactly alike in height, length, and shape of cutting edge. A simple filing jig for this purpose is shown in Fig. 28. It consists of two parts doweled together. One of the cutters out of the first set made serves as a model; it is placed between the two parts of the jig, butting its rear end against the stop *a*. The jig is then worked down to the height of the cutter and is

beveled to suit it; as the cutter is hardened, this can be done readily. The jig is now hardened and used to duplicate the cutters. It is made in two parts doweled together in order to cheapen its construction; the act of clamping it in the vise clamps the soft cutter placed in it at the same time, thus obviating the necessity of any clamping device. The filing jig must be made of tool steel. Before the jig can be used, the cutters must be cut down to the correct width for the slots in the mill body, which should be exactly alike to allow the cutters to interchange.

HOLLOW MILL FOR ANNULAR MILLING.

58. Hollow mills can be used with advantage on some classes of work for milling the outside of a cylindrical projection central with a hole passing through it, provided great accuracy is not required. The mill is then made with a central guide pin, as shown in Fig. 29. This pin is to be

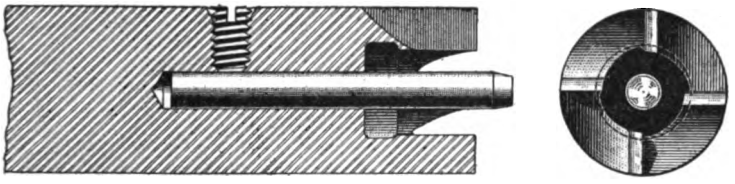

FIG. 29.

hardened at the end and drawn to a spring temper. It is recommended to hold the pin by means of a setscrew to allow ready removal when the mill is to be ground. In order to facilitate the filing of the inside clearance, it is advisable to bore out the rear end of the mill somewhat larger than its inside diameter.

TOOLMAKING.

(PART 3.)

CUTTING TOOLS AND APPLIANCES.

MILLING CUTTERS.

SOLID MILLING CUTTERS.

1. Number of Cutting Edges for Solid Cutters.—Milling cutters up to 6 inches in diameter are usually

TABLE OF CUTTING EDGES FOR MILLING CUTTERS.

Diameter of Cutter.	Cutting Edges.
½	6
¾	8
1	12
1¼	14
1½	16
2	18
2½	21
3	24
3½	26
4	28
5	30
6	32

Copyright, 1901, by THE COLLIERY ENGINEER COMPANY.
Entered at Stationers Hall, London.
All rights reserved.

made solid, and above that size they are made with inserted teeth. The number of cutting edges for solid milling cutters intended for general work may be as given in the preceding table, which is believed to conform very closely to average practice.

The cutting edges are generally made with a radial face, as indicated by the dotted lines in Fig. 1 ; the spaces on the circumference may be cut with a cutter that will produce an angle of about 50° between the face and the back of the

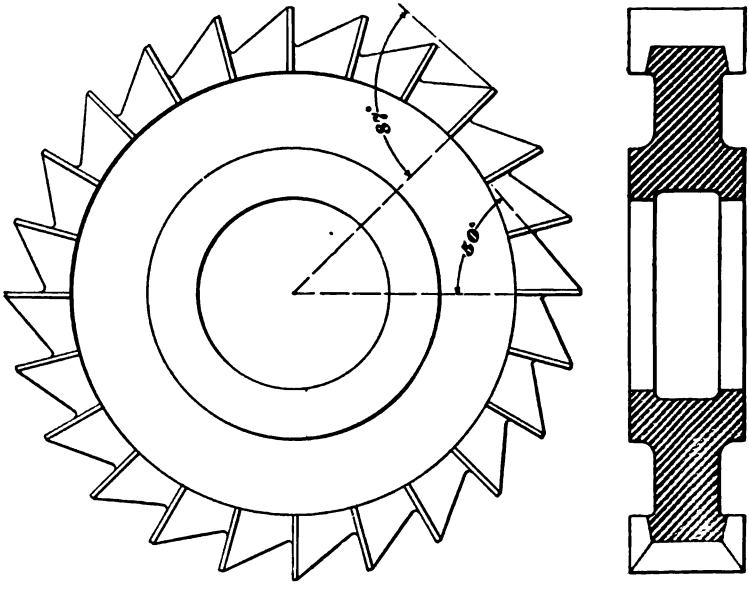

FIG. 1.

tooth. This angle gives an ample depth to the clearance spaces, and, at the same time, gives well-supported cutting edges. The milling cutter used for forming the teeth is run in deep enough to leave the lands from .02 to .04 inch in width, according to the size of the cutter that is being made. If teeth are cut on the sides of the cutter, as shown in Fig. 1, the spaces may be cut with a milling cutter that will produce an angle from 60° to 70° between the face and the back of the tooth. When milling the teeth on the sides,

the index head cannot be left at the 90° mark or at the 0° mark, but must be inclined a little, in order that the cutter may make the lands of equal width. The amount that the index head is to be inclined depends on such variable conditions that computation of it is a difficult problem; in practice, it is most rapidly found by an actual trial. After cutting the teeth, remove all burrs by filing, and harden. The tempering is done to advantage by inserting a red-hot piece of iron in the hole, thus making the cutter softest at the inside. Draw to a good straw color. Since the diameter of the hole is very likely to change in hardening, it is considered good practice to make it slightly smaller, say .004 inch per inch diameter of the hole, and finish by grinding. To reduce the time required for grinding the hole, it may be recessed, as shown in the sectional view of Fig. 1. It is recommended that the sides of the boss be also ground straight, and true with the hole.

2. Grinding Milling Cutters.—The teeth are sharpened on a cutter grinder, using the finger of the grinder as a means for obtaining the proper cutting clearance. The teeth may be given a clearance of about 3°; that is, the angle between the face of the teeth and the top of the teeth may be about 87°. If this degree of clearance is given, the teeth will cut freely and the cutter will last well. If more clearance is given, the cutting edges will dull quite rapidly. For grinding the teeth on the side of a milling cutter, a small emery wheel must be used in order to get proper cutting clearance without touching the adjoining cutting edge. The method of grinding milling cutters does not differ essentially from that employed in grinding reamers; the only difference is that the cutting edges, as a general rule, are finished entirely by grinding, no oilstoning whatsoever being done on them.

In order to get the best work out of a milling cutter, it is essential that a cutter grinder be used for sharpening it. It is impossible to grind a cutter by hand so that it will be round. Milling cutters that cut only on their ends when

used for grooving may advantageously be ground so as to be slightly smaller at the rear, say about .01 inch per inch of length. When grinding cutters, it is well to bear in mind that only very fine cuts must be taken, since, otherwise, the temper will be drawn from the extreme cutting edges, which spoils the cutter. The grinding of a cutter is a job that cannot be hurried without inviting disaster to the cutting edges.

3. Helical Cutting Edges.—When making a **helical milling cutter,** more commonly known as a **spiral milling cutter,** choose a helix that will give the cutting edges an angle of about 20° with a plane passing through the axis of the cutter. It does not make any particular difference whether the helix is right-handed or left-handed when the cutter is intended for a machine in which the cutter arbor is supported at the end. However, when used for a machine in which the end of the arbor is free, the helix should be such that the end thrust due to the action of the spiral cutting edges will tend to force the arbor home; that is, if the cutter is right-handed, the helix should be left-handed; if the cutter is left-handed, the helix should be right-handed. In order that there may be no misunderstanding about the terms "right-handed" and "left-handed" when applied to milling cutters, they are here defined as follows: Standing in front of a milling machine with a horizontal spindle, and looking toward the spindle, if the milling cutter revolves in the direction of the hands of a watch, it is a *left-handed* cutter; if it revolves in a direction opposite to that of the hands of a watch, it is a *right-handed* cutter. A right-handed helix, however, is one that, in advancing, turns in the direction of the hands of a watch. A left-handed helix turns in a direction opposite to that of the hands of a watch.

4. Nicked Teeth.—For heavy milling, spiral milling cutters with **nicked teeth** are an advantage, since they break up the chips, which enables a heavier cut to be taken than is possible with an ordinary cutter. A satisfactory way of nicking them is as follows: Gear an engine lathe to

cut a thread having a pitch about equal to the distance between two teeth of the cutter, and with a round-nosed tool cut a half-round thread having a width equal to about one-fourth the pitch of the thread. This is preferably done before the clearance spaces are milled in the cutter. Inserted-teeth cutters with either straight or helical cutting edges, and solid wide cutters with straight cutting edges may advantageously be nicked by cutting a helical groove.

MILLING CUTTERS WITH INSERTED TEETH.

5. Designs.—When milling cutters exceed 6 inches in diameter, the cost of making them of one piece of tool steel

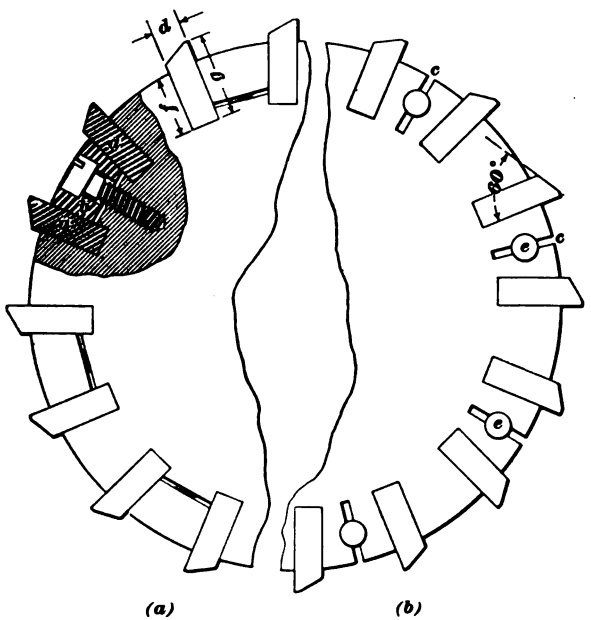

FIG. 2.

becomes rather high; in general, it is cheaper to make them with small teeth that are inserted in a body of cheap material, as cast iron or machinery steel. There is a great variety of designs that will make a satisfactory cutter. The

simplest design is that in which the cutters are fitted to dovetail slots and driven home after hardening. In order to make a good job, the cutters must be very carefully fitted, which makes renewal rather expensive. Again, as the slots must necessarily be dovetailed, they are expensive ones to make. These considerations have led to designs that do not require such close and expensive work, although they are not quite as simple. Two standard designs are shown in Fig. 2. In both, the cutters are rectangular in cross-section. Owing to this shape, the slots can be milled very cheaply, and cutters to fit them can be made at an expense slight in comparison to that involved in making dovetailed cutters. The design shown at (*a*) is one that has been adopted by The Morse Twist Drill and Machine Company, New Bedford, Massachusetts. Rectangular slots receive the cutters *a*, *a*; the body is milled out between every second pair of slots to receive the wedge-shaped piece of steel *b*, which is drawn home by means of the fillister-headed screw shown, and thus locks the cutters. A space is left between the bottom of the piece *b* and the body; this space allows a slight variation in the thickness of the cutters.

In the design shown at (*b*), the metal between every second pair of slots is slotted with a narrow slot, as *c*, *c*. Before cutting the narrow slots, a hole is drilled clear through and reamed "taper" to receive the taper pins *e*, *e*, which are driven in after the cutters are in place and serve to lock the latter. Driving the taper pins out loosens the cutters sufficiently to allow them to be easily withdrawn. This design of cutter is furnished by The Pratt & Whitney Manufacturing Company, Hartford, Connecticut.

6. Helical Cutting Edges. — Inserted-tooth milling cutters may be given helical cutting edges for the same purpose that solid cutters are provided with them. Obviously, if a helical slot is cut into the body, the cutter tooth will also have to be helical in order to fit it. This is a very expensive shape to produce, however, and can scarcely be made with the ordinary machinery to be found in a tool room. For

this reason, straight slots are cut at an angle to a plane passing through the axis, and straight cutters are universally used. Straight cutters set at an angle are open to one serious objection, however, which is that the front face of the cutter is not radial throughout its length, but changes from a front rake at one end to a radial face in the middle and then to a negative rake at the other end. This is shown in Fig. 3, which shows one straight cutter inserted at an angle. In order to bring out the objectionable point more clearly, the diameter of the body has been made rather small. At the end *a*, the face of the cutting edge has front rake, as indicated by the radial line *o c*. At *d*, as indicated by the

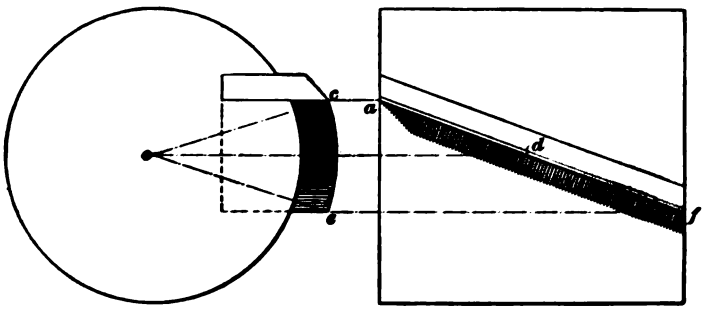

FIG. 3.

radial line *o d*, the cutting edge is radial, changing to a negative rake toward *f*. The amount of negative rake at *f* is shown by the radial line *o e*.

The best way of curing this defect is to mill the cutting face helical with a suitable cutter set to produce a radial face. To allow this to be done, the cutter must either be made thicker throughout, or thickened on the cutting face from beyond the body.

7. Before cutting the slots, select a helix that will give the cutting edges an angle of about 20° with a plane passing through the axis. Gear the milling machine to cut this helix and put the turned blank body in the machine. With a scriber clamped to the milling-machine arbor, scribe a helical line on the surface of the body. This line will then

serve as a guide for setting the index head by trial to the angle that will give a straight slot coinciding closely with the helix. Unless the milling machine is so arranged that the index head swivels on the platen, the slots will have to be cut with an end mill. Many designs of milling machines have a so-called *raising block* to which the index head may be clamped and then swiveled across the platen. If this is the case, the slots can be cut with a regular axial cutter. After the cutters have been inserted into the slots and locked, the milling machine is geared again for the proper helix and the cutting face of each cutter milled helical and radial.

8. Proportions and Number of Teeth.—The number of cutting edges for milling cutters with inserted blades may be about as given in the following table, which is given primarily for the purpose of aiding the toolmaker in selecting a suitable number of cutting edges. As opinions differ considerably in regard to this matter, it must not be expected that all cutters will conform to the table, which is believed to represent average practice.

TABLE OF CUTTING EDGES FOR MILLS WITH INSERTED CUTTERS.

Diameter.	Number.	Diameter.	Number.
6	12	18	35
7	14	20	38
8	16	22	41
9	18	24	44
10	20	26	46
12	24	28	48
14	28	30	50
16	32	32	52

The proportions of the cutters may be about as follows: Referring to Fig. 2, the thickness d of the cutter may be about one-fourth the distance from one cutting edge to the

next one; the depth g may be about three-fourths the pitch of the cutting edges; and the depth f of the slots may be about fifty-five one-hundredths of the pitch. By *pitch* is here meant the distance from one cutting edge to the other measured along the arc of the circle circumscribed about the cutter. In other words, the pitch of the cutting edges is equal to the circumference of the cutter divided by the number of teeth. The cutters may be backed off with a milling cutter that will give an angle of 60° between the front and the top of the cutter, as shown in the figure. The backing off may be carried forwards enough to leave a land of about .03 inch; after hardening and tempering, the cutting edges are finally given by grinding the assembled mill in a cutter grinding machine, giving a relief of about 3°.

FLY CUTTERS.

9. For work that cannot be classified as repetition work, a **fly cutter** is often of great advantage in milling odd shapes. Having but a single cutting edge, it is quite cheaply formed, even if the shape to be milled is quite complex. If properly made, it can be sharpened quite a number of times without materially changing its shape. Fly cutters are frequently made by filing them to the proper shape; when thus made, it is very difficult to form them so that their shape will not be materially changed by successive sharpenings. If the method given below is adopted, a satisfactory fly cutter will be produced; a further advantage of this method is that the cutter can always be duplicated at small expense.

A fly cutter must not be expected to cut as fast or wear as long as a regular milling cutter; it will reproduce its shape with great exactness, however. It will be found of great advantage in making and duplicating forming tools of irregular contour for the forming lathe and turret lathe.

10. The first step is to make a forming tool, as a in Fig. 4, cutting into its front end the shape that the cutter

is to produce. This may be done in whatever way is convenient; it is usually done by filing. This tool is held in the vise of the milling machine and is set at such a height that its top face is level with the center of the spindle. The soft cutter, which, previously, may have been roughly filed to shape, is then inserted in the fly-cutter holder and locked. The machine is now started and the forming tool carefully fed against the revolving cutter, which is thus cut to the shape of the forming tool. The cutter should be fastened to the holder as far inwards as possible; it should not project farther from it than sufficient to just allow the forming tool to clear the holder when fed in enough to cut its full shape. The cutter thus formed has no clearance. This, however, is obtained by the simple expedient of setting the cutter farther out. Grinding a fly cutter thus made will not materially change its shape, as long as the precaution is taken of grinding it on its front face in such a way that the face remains radial. The cutter should be of sufficient thickness to give a radial front face, as shown in the illustration.

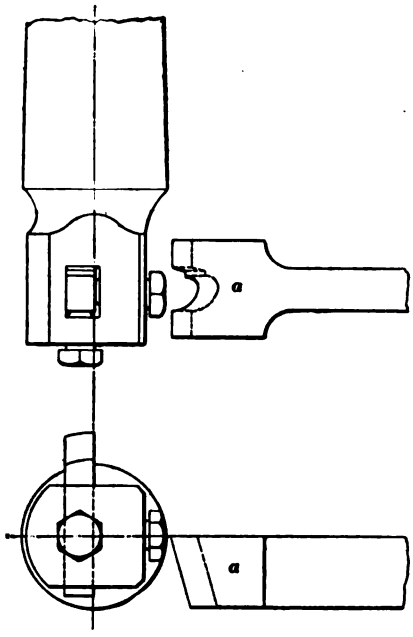

FIG. 4.

FORMED CUTTERS.

11. For milling irregular contours on repetition work done in large quantities, **formed cutters** with teeth shaped to conform to the contour required are in universal use.

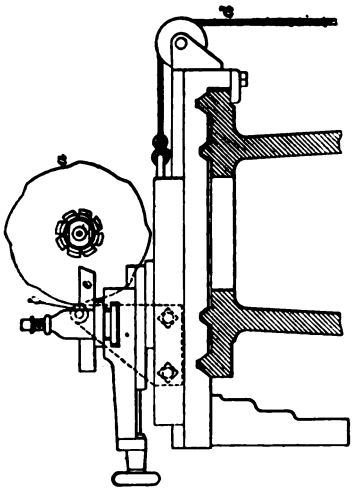

These milling cutters are so formed that they can be ground on the face of the cutting edges without changing the shape of the contour. This form can only be given by the aid of special machinery designed for that purpose and not usually found in a tool room. For this reason, it is cheaper, as a general rule, to have formed cutters made to order by shops making a specialty of this work.

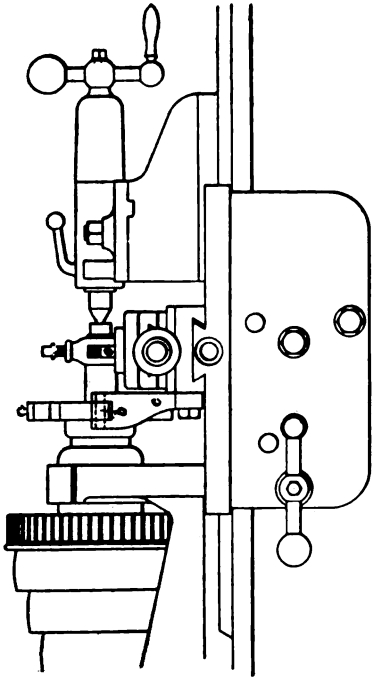

FIG. 5.

12. Backing-Off Attachments. — Should circumstances render it advisable to make formed cutters in the tool room, an engine lathe can be converted temporarily into a **backing-off machine.** The attachments required will not in the least destroy the usefulness of the lathe as a lathe, as will become apparent when the device is studied. For attaching the device, a lathe with a compound rest must be selected. The lathe selected should be very stiff and of ample size; it is recommended that a

20-inch lathe be used in preference to a smaller one. The larger lathe is likely to be much stiffer, which is essential in order to do good work.

The backing-off attachment shown in Fig. 5 is one that is quite simple, relatively inexpensive, adaptable to any lathe having a compound rest, and will do excellent work. Its drawbacks are several: *First*, the amount of clearance for a given size cutter, i. e., the difference in the distances from the center of the cutter to the front edge and the back edge of the land, cannot be changed, being governed by the way the cam is laid out; *second*, the shape of the cam determines the number of cutting edges, which cannot be changed without making a new cam; *third*, using one cam only, the amount of clearance will be the same, irrespective of the diameter of the cutter. From this it follows that a large cutter will have a much smaller angle of relief than a small one. This will be referred to again further on.

13. The device consists essentially of a cam *a* rigidly attached to a small face plate in any convenient manner. A roller *b*, which is carried by a bracket *c* rigidly bolted to the lower part of the slide rest, engages the cam *a* and is held against it by a heavy weight attached to the rope *d*. The cross-feed screw being taken out of the cross-feed slide, the latter, by reason of the roller engaging the revolving cam, is moved in and out in a manner depending on the shape of the cam. The compound rest is swung around square with the bed, and the forming tool *e* is held in the tool post. It is fed forwards by means of the feed-screw in the upper part of the compound rest. The cutter that is to be backed off is clamped to a short, stiff arbor, which may either form part of the cam, or be fitted to the live spindle and driven by a dog. Before backing off, the cutter must be serrated; it is then clamped on the arbor in such a position that its cutting faces are in the same radial planes as the high points of the cam. This is most readily done by first setting the cam by eye so that one of its high points is on the straight line joining the center of the lathe spindle and the center of

the roller. Then, with the forming tool set to the height of the lathe center, the tool is run forwards until it nearly touches the cutter, which is then rotated on its arbor until a cutting edge is in the same plane as the top face of the forming tool. The cutter is now properly set and is then clamped.

14. A rather simple way of backing off milling cutters was made public by Mr. R. D. Morse in 1899. The rig used

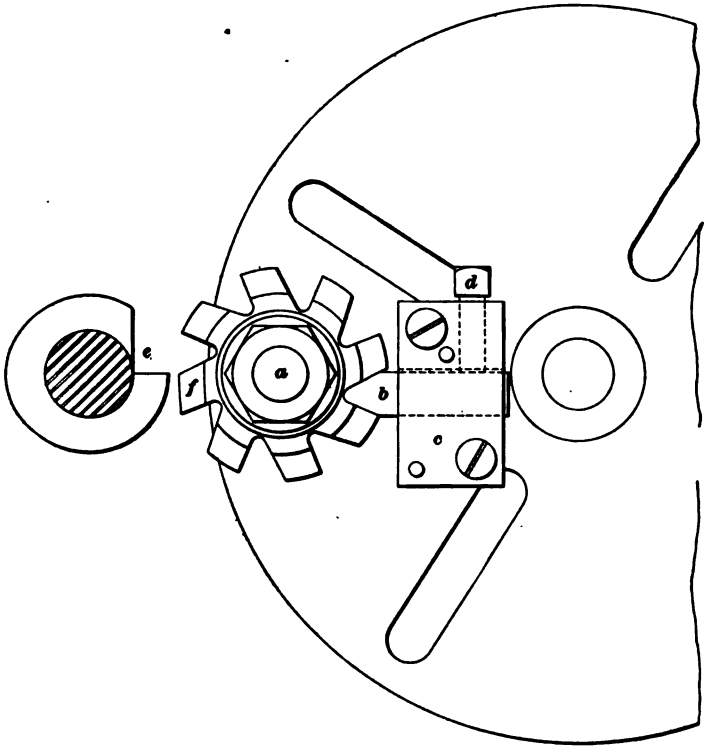

FIG. 6.

recommends itself for its simplicity and cheapness; it is open to only one objection: as the cutting faces are ground away, the shape milled by the cutter changes slightly. The amount of this change is quite small, however, and for many

classes of work may be permissible. The device consists essentially of a stud *a*, Fig. 6, securely screwed into the face plate of a lathe near its periphery. This stud is turned to fit the hole of the cutter, which is clamped to the stud by the nut shown. A pawl *b*, movable longitudinally in a rectangular slot of the bridge *c*, serves to keep the cutter from turning. The pawl is kept from moving by the setscrew *d*. A forming tool, which may be circular as shown at *e*, or flat as was shown in connection with the making of a fly cutter, is held in the tool post of the lathe and fed in gradually until the tooth is formed. After one tooth is formed, as the tooth *f*, the pawl *b* is unlocked and slipped back. The milling cutter operated on is rotated one notch to bring another tooth in position, the pawl is slipped forwards and locked, the cutter clamped again and the forming tool fed in once more. This is repeated until each tooth has been backed off. It will be understood that the milling cutter does not rotate in respect to the face plate, but rotates with the face plate. If a cutter is backed off in this device, it is necessary to cut the notches slightly wider than the lands.

15. Laying Out Cams for Formed Cutters.—Before a cam for a backing-off attachment can be laid out, several factors that influence its design must be known. These are the diameter of the cam, the diameter of the cutter, the number of teeth, and the angle of relief that the cutter is to have. Of these factors, the minimum diameter of the cam is fixed by the design of the lathe it is proposed to use. In general, the cam should be made as small as these considerations permit, since there

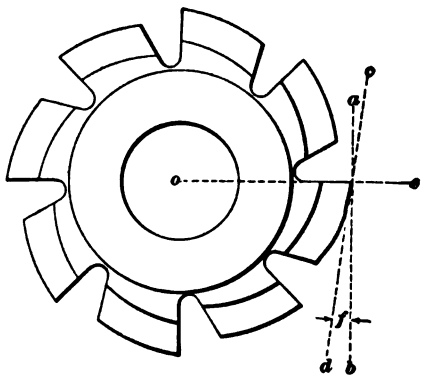

FIG. 7.

is nothing gained by making it large. The diameter of the cutter and the number of teeth being known, the only factor left is the best angle of relief. For wrought iron, cast iron, and steel, it may be made about 8°; for brass, about 10° to 12°. In order that there may be no misunderstanding about the term "angle of relief," it is here defined as the angle *f*, Fig. 7, included between a line perpendicular to a radial line and tangent to the cutting edge, as *a b*, and a line tangent to the curved surface of the tooth at the intersection of the radial line *o e* and the line *a b* perpendicular to it, as *c d*.

16. The preliminary data having been determined, the cam outline is laid off as follows: Referring to Fig. 8, draw

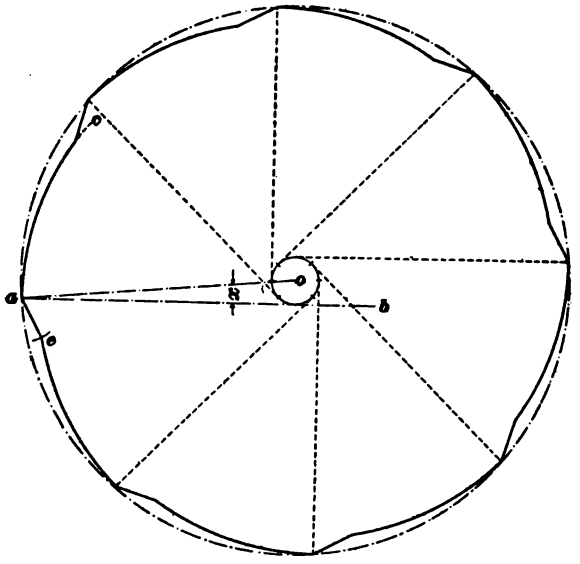

FIG. 8.

a circle having a diameter equal to that of the cam. Divide this circle into a number of equal divisions equal to the number of teeth. From one of these points draw a radial line, as *a o*. Next, multiply the angle of relief determined upon by the outside diameter of the cutter and divide the

product by the outside diameter of the cam. The quotient will be the angle x, which the line $a\ b$ is to make with $a\ o$. Thus, if the angle of relief is to be 12°, and if the cutter is 3 inches in diameter and the cam 9 inches, the angle that $a\ b$ is to make with $a\ o$ is $\frac{12 \times 3}{9} = 4°$. The line $a\ b$ having been drawn, draw a circle about o as a center and tangent to the line $a\ b$. With half the outside diameter of the cam as a radius, and from the points of division on the outer circle, describe arcs intersecting the circle tangent to $a\ b$. With the points of intersection as centers and the same radius, describe arcs, as $a\ c$. Next, with a radius equal to about one-fifth the distance between adjoining divisions on the outer circle and from the points of division, describe arcs intersecting those previously drawn. Join the points of intersection and the points of division on the outer circle by straight lines, as $a\ e$. This will complete the cam outline.

17. Making a Cam for Formed Cutters.—There is a variety of ways in which the cam may be made. One way

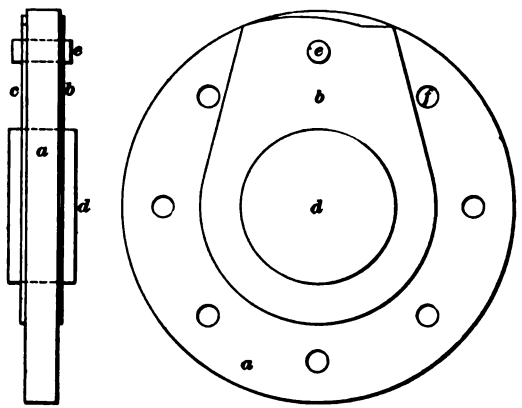

FIG. 9.

that can be recommended, on account of the accuracy that can be obtained by it at slight expense, is shown in Fig. 9. In the illustration, a is the cam; b and c are filing templets secured and held in proper position by the plugs d and e.

The outer ends of the two filing templets are shaped to the proper cam outline and are wide enough to cover one section. They are hardened at the ends as hard as possible, and, when placed in position, the cam is worked down to them. The plug *e* is then withdrawn and the templets revolved to the next hole, as *f*, when the plug is inserted again. This is repeated until the cam is completed.

The first step in making the cam and templet is to bore, turn, and face the cam blank, which may be made of cast iron. While still on the mandrel on which it has been turned, put it in the milling machine and divide the periphery by fine scriber lines, scribed preferably on the face, into the proper number of equal divisions, using the index head for the purpose. Make a temporary drilling jig shaped about like the templets. Bore a hole to fit the mandrel closely and bevel some part near the end of the jig. Mark a fine radial line on this bevel and drill a small hole, say about $\frac{1}{4}$ inch in diameter, somewhere on the jig at a distance from the center of the large hole equal to about four-fifths the radius of the cam. Then, by placing this drill jig on the mandrel and making the line marked on it coincide successively with the division lines near the periphery of the cam, the hole in the drilling jig can be transferred to the cam by drilling, thus drilling a row of holes equidistant from the center and equally spaced. Next, on a piece of sheet steel, by the method previously given, lay out the cam outline for one section. Carefully file to the line; then bore the hole to fit the plug *d* (or the mandrel, if the work of making the plug is to be saved), and place it on the plug, clamping it to the cam. Drill the hole intended for the plug *e* through the templet, thus using the cam as a jig; then harden its end and from it make an exact duplicate by pushing plugs *d* and *e* through both templets and then filing the second one to the first, or hardened, templet. Harden the second one; put both in place and then file the cam to them.

18. Forming Tool. — The **forming tool** should always be set so that its top face is radial, as indicated in

Fig. 10 by the dotted line. If thus set, it will reproduce exactly the shape given to its cutting edge. The forming tool requires considerable clearance on account of the cutting being done on an arc eccentric in respect to the axis of the milling cutter. The angle included between the face of the forming tool and its top can be found by adding 10° to the angle of relief of the cutter and subtracting the sum

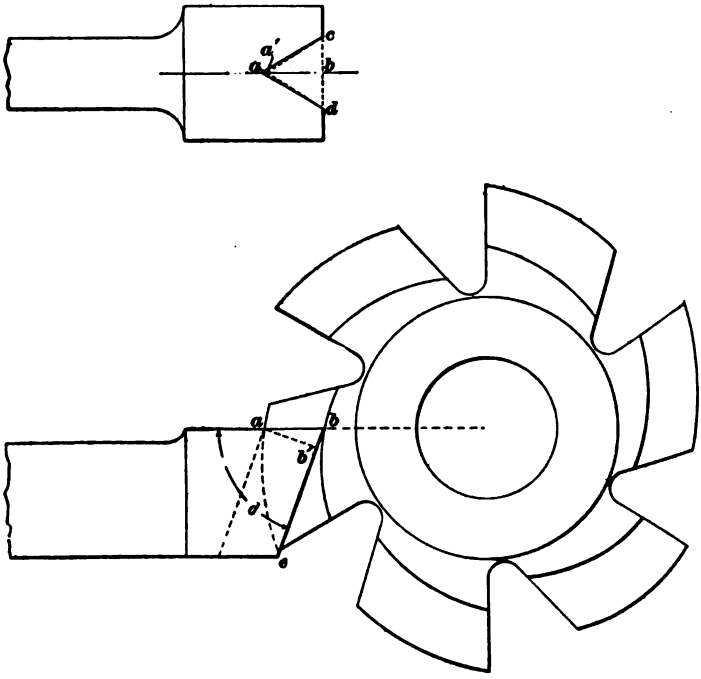

FIG. 10.

from 90°. Thus, if the angle of relief is 8°, the angle *d*, Fig. 10, should be $90° - (8° + 10°) = 72°$. If the forming tool is given the angle calculated by the method just given, it will have a cutting clearance of 10°, which is considered ample.

When making a forming tool, it must not be assumed that the form can be planed or milled with a tool having exactly

the shape it is desired to produce. That this cannot be done is shown in Fig. 10. The forming tool there shown is of such simple form that it clearly exhibits the difference in shape. Let $a\,b$ be the depth of the form of the forming tool and $c\,d$ its width. Then, the tool that could plane this shape must have a depth $a\,b'$, while its width would be the same as $c\,d$. Now, in the right-angled triangle $a\,b\,b'$, the side $a\,b'$ adjoining the right angle must be shorter than the hypotenuse $a\,b$. Transferring the distance $a\,b'$ to the plan view, and laying off $a'\,b = a\,b'$, we get $c\,a'\,d$ as the shape of the form at a right angle to $b\,e$. In other words, the planing tool or milling cutter used to produce a form as $c\,a\,d$ must have the shape $c\,a'\,d$, which differs somewhat from the shape desired. This difference in shape will vary with the angle d.

19. Theoretically, it is possible to lay out, by the principles of descriptive geometry, the correct shape of planing tool required to cut the form; it is not such an easy matter, however, to transfer this lay-out to steel, owing to the differences in shape being very small. Hence, in practice, forming tools are made in a different manner.

The forming tool having been planed and squared all over, the form is roughed out and the cutting edge filed to correct shape, filing at a right angle to the top surface. The tool is then placed in the vise of a milling machine or shaper at the proper inclination to give the required clearance, and, with a pointed tool or narrow milling cutter, the clearance is cut in successive steps, using the extreme cutting edge as a guide for setting the cutting tool. By careful manipulation, using a pointed tool or narrow cutter, the forming tool can be cut very close indeed to the required form and will then require very little filing. If thus made, the cross-section of the form will be the same throughout the depth of the forming tool; in consequence of this, the tool can be ground on its top surface without changing its shape, provided the precaution is taken of always grinding square across and without changing the angle d.

WORM-WHEEL HOBS.

20. Designing the Hob.—The **hob** for cutting the teeth of **worm-wheels** is a special kind of a milling cutter. It is practically a duplicate of the worm, except that it is made slightly larger in diameter. It is serrated to form cutting edges, as shown in Fig. 11. The grooves or slots are sunk in deep enough to go below the bottom of the thread, as shown.

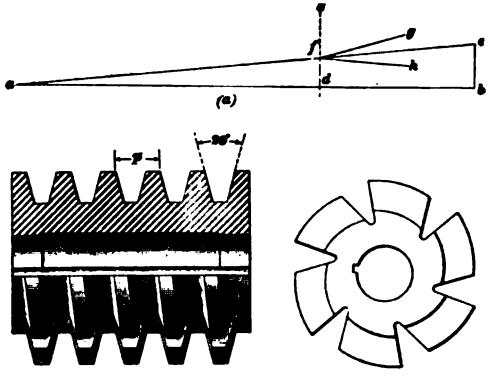

FIG. 11.

Most worms and worm-wheels are made in accordance with the involute system of gearing adopted by The Browne & Sharpe Manufacturing Company, the teeth of the worm having the same shape as the teeth of a rack of the same pitch. The angle included between the sides of the teeth is 29°, or each side makes an angle of 14½° with a plane perpendicular to the axis of the hob. In this system, the whole depth of the tooth (or space) for the worm is found by multiplying .6866 by the pitch; by *pitch* is here meant the distance between corresponding points of adjoining teeth, as the distance *p*, Fig. 11. The word *pitch* as here used should not be confounded with the term *lead*, which, when used in reference to a worm, implies the distance that one thread advances in a complete revolution. For a double-threaded worm, the pitch will be one-half the lead, and, for a triple-threaded worm, it will be one-third the lead. Knowing the outside diameter of the worm and the

pitch, the diameter across the bottom of the spaces, or inside diameter, is equal to the outside diameter diminished by twice the whole depth of worm-thread. Some toolmakers make the inside diameter of the hob equal to the inside diameter of the worm, while others make it somewhat less. The outside diameter of the hob is found by adding one-tenth the pitch to the outside diameter of the worm. Thus, if the worm is 3 inches outside diameter and .7 inch pitch, the inside diameter of the worm (and of the hob) is $3 - 2 \times .6866 \times .7 = 2.04$ inches. The outside diameter of the hob will be $.1 \times .7 + 3 = 3.07$ inches.

21. Hob-Forming Tool.—The tool for threading the hob and worm should include an angle of 29° and be cut off square across until its width at the end is equal to .31 times the pitch. For the hob under discussion, the end of the tool should be $.31 \times .7 = .217$ inch wide. To find the side clearance required for the tool, draw a line, as ab in Fig. 11 (a), equal in length to the circumference of a circle having a diameter equal to the inside diameter of the worm. At the one end erect a perpendicular bc, equal in length to the pitch. Join a and c by a straight line. At any convenient point on the line ab, erect a perpendicular de, and, from its point of intersection with the line ac, draw lines fg and fh at an angle of 10° to ac. Then, the angles efg and dfh are the angles that the sides of the thread tool must make with a surface on which the tool is resting in the same position it will occupy in the lathe. For a right-handed worm, the angle efg is that of the left-hand side of the tool, looking on top of the tool from the shank toward its cutting end. For a left-handed worm, the angle efg belongs to the right-hand side of the tool.

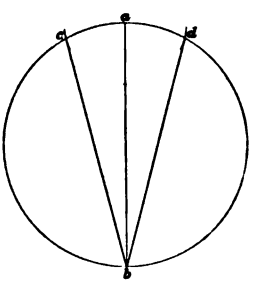

FIG. 12.

22. A 29° angle may be laid out by the following construction, taken from Brown & Sharpe's treatise on "Gearing." In a circle of any convenient size, draw any diameter, as ab,

Fig. 12. From *a*, with a radius equal to one-fourth the diameter, describe arcs intersecting the circumference of the circle at *c* and *d*. Draw the lines *c b* and *d b*. The angle included between these two lines is 29°, very nearly. The actual angle given by this construction is 28° 58′; this is close enough for the purpose to call it 29°.

23. Width and Number of Slots.—The width of the round end of the cutter used for serrating the hob may be about .17 × pitch + .12 inch. Thus, for a hob having a pitch of .7 inch, the cutter may be about .17 × .7 + .12 = .239 inch, say ¼ inch wide. The number of slots should be such that the width of land at the bottom of the slots is about equal to the depth of the thread plus .12 inch. To find the number of slots, divide the circumference corresponding to the inside diameter of the hob by the depth of the worm-thread increased by .12 inch plus the width of the cutter. Thus, taking a pitch of .7 inch, the depth of the thread of a worm is .6866 × .7 = .48 inch. Using a cutter ¼ inch wide on the end, the number of slots will be, for an inside diameter of 2.04 inches,

$$\frac{2.04 \times 3.1416}{.48 + .12 + .25} = 7 \text{ slots.}$$

The construction of a hob is influenced by the work to be done and the manner of doing it. If the hob is to be used in an automatic hobbing machine or gear-cutter, where the blank is mechanically rotated, the number of cutting edges may be reduced. If the blank is gashed and the hob depended on for rotating the blank, a greater number of teeth will be necessary, so that at least two teeth may always be in contact with the blank. Hobs work best when the grooves are spirals at right angles to the thread, in place of parallel to the axis of the hob; as in the former case, each tooth has two equal cutting edges instead of one acute edge and one obtuse edge. When the grooves are parallel to the axis of the work, they should be so cut that the cutting faces of the teeth in the center of the hob are radial. Hobs are sometimes hardened without backing off. This will answer

in the case of a hob intended for cutting only one or two gears, but if the hob is to do much work, it should be backed off on all cutting edges. For large worm-wheels, the body of the hob is sometimes made of cast iron or machinery steel and provided with inserted cutters or teeth. A hob must be at least as long as the portion of the worm that engages any of the teeth of the worm-wheel. In some cases where the worm-wheel is to be cut in an automatic machine, a short hob is made for roughing and a longer one for finishing. The teeth of the roughing hob may be plugs inserted and fastened with setscrews. The teeth are sharpened by grinding in the slots with a narrow and rather coarse emery wheel.

GAUGES AND GAUGE MAKING.

GENERAL CONSIDERATIONS.

CLASSIFICATION OF GAUGES.

24. The comparative measurements made in the machine shop being almost entirely limited to linear and angular measurements, only **gauges** intended for such will be considered here. A gauge may be broadly defined as any standard of comparison. Gauges may, according to their purpose, be divided into two general classes, which are *reference gauges* and *working gauges*.

25. Reference Gauges.—Reference gauges are gauges that represent either an accurate subdivision of the imperial yard, or some arbitrary size or shape adopted for some purpose and required to be preserved. Gauges of this class are essentially reference gauges, thus called because, by referring to them, it can be determined whether the gauges used in the shop are of correct size or shape. Reference gauges are often called **master gauges.** They may be of many different shapes and forms, according to the

purpose for which they are intended. Among the more common ones may be mentioned the standard end-measure pieces made by Pratt & Whitney, and the standard reference disks made by Brown & Sharpe. Among the rarer ones are the taper gauges showing the exact taper of each of the different Morse taper shanks, which are in the possession of The Morse Twist Drill and Machine Company, and the standard imperial yard bar in the possession of the United States Government. These are all distinctly reference gauges, inasmuch as they are used only for comparing the working gauges with them.

26. Working Gauges. — Gauges intended for shop use may either represent an integral or fractional subdivision of the imperial yard, or may be made a duplicate of some reference gauge that has been made to suit some working model, as is often done in repetition work. In the latter case, the gauge is not usually measured by linear or angular measurements, but is made strictly by comparison, and is then usually called a name in accordance with the purpose of the piece of work it gauges.

27. Definite and Limit Gauges.—All gauges may be subdivided into two divisions, of which the first may be called **definite gauges** and the second **limit gauges.** Definite gauges are those that establish a certain linear or angular dimension; limit gauges are those that prove whether a piece worked to them will fit in its proper place. Limit gauges obviously require to be in pairs; one of the pair then determines the deviation above, and the other determines the deviation below, the true linear and angular dimension or shape that is permissible without destroying the usefulness of the work gauged by it.

ACCURACY ATTAINABLE IN GAUGE WORK.

28. Limits of Accuracy. — The definite gauges in most common use are **plug and ring gauges, snap gauges, end-measure rods,** and **taper gauges.** Of

these gauges, the first three named establish definite linear dimensions, and the last named establishes an angular dimension.

Definite gauges in general, and also some limit gauges, cannot usually be made without suitable measuring instruments. The kind of measuring instrument to be employed naturally depends on the accuracy with which a size is to be established. In general, the limits of accuracy that may be obtained by the aid of the various measuring instruments are as follows:

1. Using a graduated standard scale, made by a reputable maker, that has its graduations cut in a dividing machine and setting calipers to it, the limit may be placed at .002 inch; that is, the size established may be .002 inch above or below the true size, giving a total variation of .004 inch.

2. Using a vernier caliper, if made by a reputable maker, the total variation need not exceed .001 inch. Remember that the total variation is twice the limit of accuracy.

3. By the aid of a good micrometer kept in first-class order and tested frequently by standard end-measure pieces or reference disks, gauges can be made in which the total variation is within .0001 inch.

4. When the total variation is to be less than .0001 inch, a micrometer is not reliable enough any more, and recourse must be had to a standard bench-measuring machine in which a contact piece takes the place of the sense of touch of the toolmaker. With such a machine, work can be measured within a limit of accuracy of .00002 inch, or a total variation of .00004 inch. This may be considered ordinarily as the commercial limit of accuracy; it is rarely required for gauges other than reference gauges.

5. Measurements closer than those possible with a bench-measuring machine are made by means of a comparator. Work of this class is outside of the legitimate domain of the toolmaker and comes within the realm of the scientist, since it cannot be justly classified under the heading of commercial work.

29. Needless Accuracy. — In gauge work, the toolmaker must guard against needless accuracy, since the cost of gauges is increased at an enormous rate with every reduction in the limit of variation. The purpose that the gauge is intended for will usually indicate the permissible limit of variation, and thus, by the exercise of judgment, allow a proper method of making it to be chosen. This in turn will allow gauges to be produced that are not only "good enough" but also reasonable in first cost. For instance, a gauge intended for testing the accuracy of a micrometer naturally needs to be accurate in itself, within the commercial limit of accuracy; while a gauge intended for trying the bore of a large steam-engine cylinder, say 40 inches in diameter, would usually be accurate enough for the purpose if it varies not more than .01 inch from its true dimension. Likewise, a gauge intended for the blacksmith, who, on medium-sized work, would consider it very good indeed if he works to within $\frac{1}{16}$ inch variation, would be needlessly accurate if made closer than $\frac{1}{64}$ inch to its true size.

Sometimes it is rather difficult to decide on how close a gauge must agree with its nominal size; in that case, the toolmaker must use his judgment. For instance, suppose that some part of a job is to be turned cylindrical and to fit a hole in some other piece, the two pieces of work being done by different men working to gauges. Then, while it is of paramount importance that the gauges used by the two men agree with each other, this does not necessarily imply that the actual size of the gauges must agree with their nominal size within the utmost degree of refinement. Judgment alone can determine the comparative accuracy required.

MATERIALS USED FOR GAUGES.

30. The material most commonly used for gauges is **tool steel,** although for some work machinery steel is "good enough." The treatment of tool steel for gauge work depends somewhat on the accuracy required, and the

hardness of the gauge. When a gauge made of tool steel, hardened all over, and probably clear through, or nearly so, is finished to an accurate size immediately after hardening, it has been observed that, frequently, there is a gradual change of size or shape taking place, which, in the course of time, may cause a sensible deviation. This change of shape is ascribed to a rearrangement of the molecules of the steel, whose former arrangement has been violently disturbed by the hardening process. Fortunately, this change of shape, which, according to observation, lasts for about a year, is not very large, rarely exceeding .0005 inch per inch diameter, hence it need not be taken into account for any but very accurate gauges. For reference gauges made within a limit of variation of .00002 inch, it must be taken into account if the nominal size or shape of the gauge is to be preserved. The usual way is to rough out the gauge directly after hardening to within a small amount, say .002 inch per inch diameter for a plug gauge, and then allow it to "season," or "age," as it is called, for about a year before finishing it to size.

Personal observation has led the writer to believe that this seasoning process can be greatly hastened by drawing the hardened gauge to a straw color after it has been roughed out. Undoubtedly, a change takes place even after this, but the amount is believed to be so small as to be insensible, and hence negligible for commercial work. As a matter of course, this method of seasoning steel leaves the gauge softer, and hence it will wear faster. Whether this is a matter of sufficient moment to prohibit the use of this method, everybody must decide for himself.

31. Reference gauges that are rarely used are often left soft; they are then made from well-annealed tool steel, which does not seem to change a sensible amount with age. Machinery steel, if well annealed in case any forging has been done in making the gauge, will keep its shape and size very well; being much softer than tool steel, it will naturally wear much faster. Gauges that are made from tool

steel, but hardened only in parts, do not seem to be affected much, if any, by the "aging," provided, of course, that the hardening extends over but a very small part of the gauge.

GAUGE MAKING.

PLUG AND RING GAUGES.

32. Making a Plug Gauge.—To make a plug gauge, turn down a piece of well-annealed tool steel on centers of liberal size, making a grinding allowance of .01 inch up to $\frac{1}{4}$ inch diameter, .02 inch up to $\frac{5}{8}$ inch diameter, and .03 inch up to $1\frac{1}{4}$ inches diameter. Above that size, .04 inch should

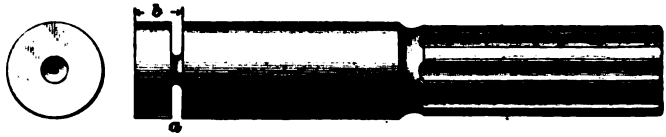

FIG. 13.

prove ample. Flute or nurl the shank, then turn a groove, as *a*, Fig. 13, with a half-round tool, at a distance from the end sufficient to come clear of the countersink. Turn the groove deep enough to leave the diameter of the neck about $\frac{3}{32}$ inch for a $\frac{1}{4}$-inch plug gauge, and $\frac{1}{8}$ inch for sizes up to $\frac{1}{2}$ inch. For sizes up to $\frac{3}{4}$ inch, it may be $\frac{3}{16}$ inch in diameter, and $\frac{1}{4}$ inch for sizes up to $1\frac{1}{4}$ inch. For sizes above this, leave the neck about $\frac{5}{8}$ inch in diameter. The distance *b* may be about one-tenth the diameter of the gauge plus .2 inch. Harden all over and then grind in a grinding machine to within a small amount of the finished size. Now, let the steel season by age, or temper it to hasten the seasoning. Then grind to within .001 inch of the finished size, and as truly cylindrical as possible. Finish by lapping with the finest flour emery, using a speed lathe for the sake of convenience, and a suitable lap.

The process of lapping naturally heats the gauge considerably; if it is measured while hot, it will be below size when

it has cooled off to the normal temperature, owing to the contraction of the steel in cooling. For this reason, the gauge must be cooled off to the temperature of the room before it is measured, if any degree of accuracy is required. To cool it off, insert it in a bucket of water that has been in the room for an hour or more, leaving it in the bucket long enough to cool down to the temperature of the water. Repeat the lapping until the gauge is the correct size, within the limit of accuracy determined necessary. All measuring must be done on the cylindrical part of the gauge itself, but never on the disk at the end. In sliding the lap back and forth while lapping, the lap is sure to cut faster at the extreme end of the gauge, which is therefore ground slightly tapering, as careful measuring will show. In order that the gauge may be straight throughout, the disk is formed at the end and then broken off after the gauge is lapped to size. To finish the end nicely, grind it off square in a grinding machine, holding the gauge in a chuck.

33. The lap may be made in various ways. A very satisfactory construction is shown in Fig. 14. The lap proper consists of a ring bored parallel inside and to a diameter about .001 inch larger than the outside diameter of the

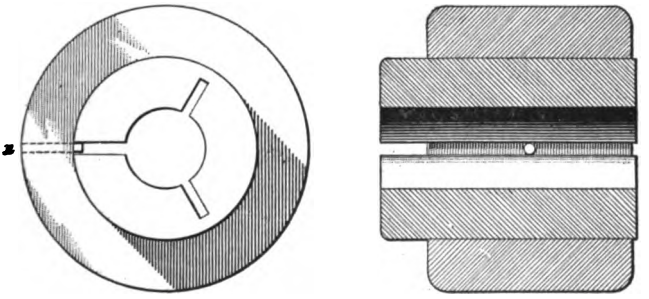

FIG. 14.

gauge. The outside of the ring is turned tapering on a taper of $\frac{1}{8}$ inch per foot; it is fitted to a collar somewhat shorter than the lap. The lap is split by three cuts, two of which terminate at a short distance from the exterior

surface. The third cut is carried clear through. Evidently, driving the lap into its collar closes the lap in. The most satisfactory material for it is close-grained cast iron. In the lap shown, the friction between the collar and the lap is usually sufficient to prevent the lap from turning in its collar. If desired, a small pin, as *a*, may be inserted. The length of the lap should not be less than three times the diameter of the gauge. With the construction shown, the lap is closed in practically uniform throughout its length; this is necessary in order to produce good work.

34. Large plug gauges may be made in two parts. The body may then be made of machinery steel, and a hardened tool-steel bushing that has been ground on the inside after hardening may be forced over the body and then ground and lapped to size. The bushing being rather thin, the change in shape or size while seasoning is infinitesimal. The inside of the bushing may be ground out slightly tapering, say on a taper of $\frac{3}{16}$ inch per foot; the body should then be ground to fit very nicely. Owing to the bushing being hard, great care must be exercised not to drive it on too much, since it is easily split. Have both body and bushing perfectly clean and free from oil before driving the bushing home. Very little driving will then hold the bushing so tight that it cannot be loosened by any reasonable usage.

35. Making a Ring Gauge.—Ring gauges may be made in two ways: They may be made of a solid block of tool steel hardened all over, or they may have a body of machinery steel into which a hardened tool-steel bushing has been forced. Each of these methods has its own advantages and disadvantages. As far as the solid ring gauge is concerned, it is cheaper in first cost, and not liable to be indented by accidental blows; on the other hand, it is liable to crack in hardening, will change in shape or size while seasoning, and is worthless when worn. The second method of construction mentioned is slightly more expensive; this, however, is offset by the comparative absence of change in seasoning and the fact that when slightly worn it can be

restored to its former size by driving the bushing home, which is made slightly tapering on the outside for this purpose. Furthermore, when worn so as to be unserviceable, a new bushing can be made at less cost than a new solid ring gauge can be made. Knowing the advantages and disadvantages of each method, the toolmaker must decide for himself which one to adopt.

36. To make a solid gauge, use a piece of annealed tool steel long enough to give the form shown in Fig. 15 (*a*). Make the height *a* of the projection about one-tenth the

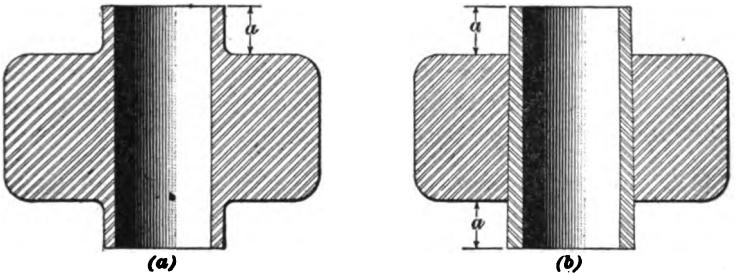

FIG. 15.

gauge diameter plus .2 inch. Make the diameter of these projections from $\frac{1}{8}$ to $\frac{3}{16}$ inch larger than the gauge diameter, and leave an ample grinding allowance on the inside. Finish the outside, stamp the size on the ring, and then harden. For the larger sizes, now grind the inside to within a small fraction of the finished diameter if an internal grinding device is available; if not, grind out by lapping in the same manner as must be done for sizes too small to admit of grinding. Then season and finally bring to the finished size by lapping, using the plug previously made as a gauge. Great care must be taken to have plug and gauge at the same temperature while trying the fit; also, both the plug and ring must be absolutely free from the abrading material used for lapping. The operation of lapping will leave the ends of the gauge slightly bell-mouthed; when the plug just commences to enter at either end, it will show the toolmaker that the ring gauge is lapped very near to the finished size.

For the final lapping, the very finest of flour emery must be used with a copious supply of oil.

The fit of the plug in the ring should simply be perfect. It should be so perfect that when the temperature of the plug is raised to blood heat by holding it in the hand for a few minutes, it will not enter the ring gauge, which is here supposed to be at a temperature of about 70°. In trying the fit, try to enter the plug by a combined sliding and rotary motion; should the plug stick, do not drive it out under any circumstances, but heat the ring gauge a little, which will quickly expand it enough to allow the plug to be withdrawn by hand. If the plug be driven out when stuck, there is a liability of badly scoring both the plug and the ring gauge. When the ring gauge has been lapped to a perfect fit, the projections at each end are ground off flush with the faces. The hole will then be perfectly straight.

37. When making a ring gauge with an inserted bushing, the machinery-steel collar may be made first, finishing it all over. The central hole is to be bored and, preferably, ground afterwards slightly tapering, say about $\frac{3}{16}$ inch per foot, making it about one-tenth the diameter plus .1 inch larger than the size of the ring gauge. Turn and bore the tool-steel bushing, leaving a grinding allowance on the inside and outside. Make the bushing long enough so that when driven home it will project at least one-tenth the gauge diameter plus .2 inch on each side. Harden the bushing and then grind or lap the inside true and round to within, say, .001 inch of the finished size. Place the bushing on a true running arbor and grind the outside to fit the tapering hole in the collar. Remove from the arbor and drive the bushing home in the collar, driving lightly. Finish the gauge to size by lapping it to fit the plug. Grind off the projecting ends of the bushing and finish by polishing, if a fine external finish is desired. A slight amount of wear can be taken up by driving the bushing farther into its hole.

38. There are various ways in which the lap for lapping the hole true and straight may be made. Many toolmakers

believe that the form shown in Fig. 16 makes the most satisfactory lap for this work. It consists of a mandrel turned tapering about $\frac{1}{8}$ inch per foot and a split shell bored to fit the mandrel. Cast iron will make a very satisfactory material for the shell, which is turned about .001 inch below the size of the hole in the gauge. It is most conveniently turned on its own arbor, being split after turning. It is advisable to cut two shallow slots, as *a*, *a*, into the shell; these, in conjunction with the slot that splits the shell, will act as reservoirs for the abrading material and oil. The depth of these two slots should be greatest for a thick shell; they will then facilitate the expanding of the lap, which is done by driving it farther on the mandrel. If the lap has

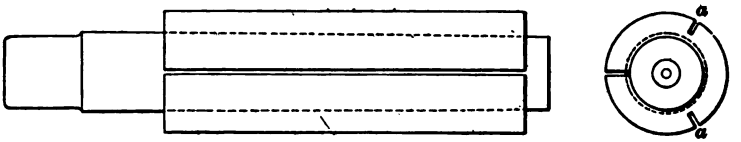

FIG. 16.

been used for roughing the hole out, and has in consequence been expanded considerably, it will be somewhat out of round. Hence, it is recommended that before the hole is lapped to final size, the lap should be ground true and round in a grinding machine. The lap simply *must* be round in order to lap the hole true. The length of the shell should not be less than twice the height of the ring gauge; it can advantageously be made three times the height.

39. Proportions of Plug and Ring Gauges.— There is no recognized standard of proportions for plug gauges and ring gauges. To aid the toolmaker in selecting dimensions, the proportions given by the following formulas may be used. In these formulas, d = diameter of plug gauge.

Length of cylindrical part of plug	$= 1.8\,d + .4$ in.
Length of handle	$= .5\,d + 1.5$ in.
Diameter of handle	$= .5\,d + .2$ in.
Height of ring gauge	$= .9\,d + .3$ in.
Diameter of ring gauge	$= 2.2\,d + .5$ in.

These formulas should not be used for plug and ring gauges exceeding 3 inches in gauge diameter.

EXAMPLE.—A 1-inch plug and ring gauge is to be made. About what proportions may be adopted?

SOLUTION.—Applying the formulas given, we get: Length of cylindrical part $= 1.8\,d + .4$ in. $= 1.8 \times 1 + .4$ in. $= 2.2$ in.; length of handle $= .5\,d + 1.5$ in. $= .5 \times 1 + 1.5$ in. $= 2$ in.; diameter of handle $= .5\,d + .2$ in. $= .5 \times 1 + .2 = .7$ in.; height of ring gauge $= .9\,d + .3$ in. $= .9 \times 1 + .3$ in. $= 1.2$ in.; diameter of ring gauge $= 2.2\,d + .5$ in. $= 2.2 \times 1 + .5$ in. $= 2.7$ in. Ans.

In a plug gauge and a ring gauge, the only essential sizes are the gauge sizes; all other dimensions are approximate and close enough if made within $\frac{1}{32}$ inch of the dimensions adopted. It is a waste of time and an evidence of misdirected skill to take much pains to work closer as far as these dimensions are concerned.

40. Limit of Variation for Limit Gauges.—Plug and ring gauges establish a definite size; by trying them into a hole or over the shaft, they show if the hole or shaft is the correct size. They do not show, however, the amount of variation from the true size, nor whether the variation in the size of the hole or the shaft is sufficient to prevent one from fitting the other with the requisite degree of accuracy, or whether they will go together at all. There is very little work indeed that requires to be as close a fit as a plug gauge into its ring gauge; in nearly all work, quite an appreciable deviation from this degree of fit is permissible. Naturally, the amount of deviation varies with the circumstances of each particular case. Furthermore, to finish a shaft, and bore a hole to receive it, to an accurate size is a very expensive job, and rarely necessary. Then, in order to prevent needless accuracy in finishing two pieces of cylindrical work that are to fit each other, **limit gauges** are employed. Thus, if a shaft is to be 1 inch in diameter and it has been decided from previous experience and observation that the fit will be close enough if there is .002 inch variation between the size of the shaft and the size of the hole, two sets of plug and ring gauges differing from each other by

the allowable variation may be used as limit gauges. One of the sets would usually be made one-half the allowable variation larger than the nominal size, and the second set would be made just as much smaller. In using the plugs, the smaller plug must enter the hole and the larger plug must not enter. Likewise, the larger ring gauge must go over the shaft and the smaller one must not go over. If this is the case with both shaft and hole, it is evident that the total variation in the fit is not more than .002 inch for the case considered, and may be considerably less.

Now, suppose that it has been decided that the shaft must fit the hole with a given minimum amount of clearance. In that case, the two male limit gauges must be smaller than their corresponding male gauges by an amount equal to the given minimum amount of clearance. Thus, if the clearance is to be at least .001 inch, and the shaft and hole may vary .001 inch from the true dimension, which is, say, 1 inch, then the male limit gauge may be made .9995 and .9985 inch, and the female limit gauge 1.0005 and 1.0015 inch.

41. Distinguishing Marks for Limit Gauges.— There are no special directions required for making cylindrical limit gauges. It is well, however, to stamp the size on all the gauges and the words "go in" on the smaller plug gauge and larger ring gauge; on the larger plug gauge and smaller ring gauge, the words "not go in" may be stamped. Another plan of distinguishing between the larger and the smaller gauges that will save the operator the time required to read the size and words, is to make the handles of the plug gauges and the outside of the ring gauges of different form. Thus, the handle of the larger plug gauge and the outside of the smaller ring gauge may be fluted with semicircular flutes, while the handle of the smaller plug gauge and the outside of the larger ring gauge may be nurled with a coarse nurling tool. If this is done, the operator that uses the limit gauges will quickly discover that nurling stands for "not go in" and fluting for "go in." While this may appear like a small matter on first thought, it should

be remembered that careful attention to such small details will sensibly increase the output of a machine operator.

A handy method of constructing a cylindrical-plug limit gauge is shown in Fig. 17 (*a*). Here the plug gauge is made of two different diameters separated by a neck of ample size. The difference in the two diameters is equal to the allowable limit of variation. Evidently, if this gauge is used, the operator can gauge a hole faster than when two

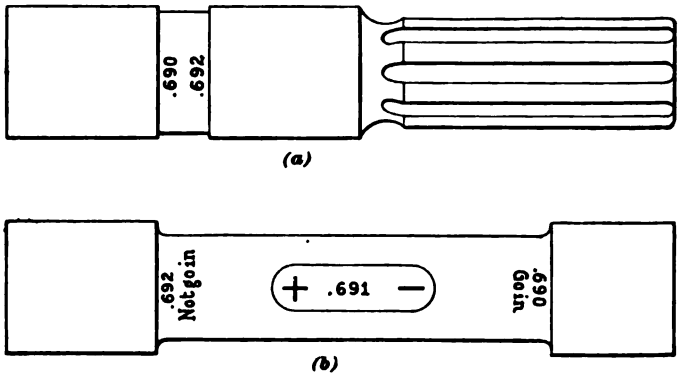

FIG. 17.

separate gauges are employed. Judgment will indicate when and where this style of plug gauge can be used. A somewhat different plug limit gauge is shown in Fig. 17 (*b*). Here the gauges are at the ends, and the handle is between them. The larger or "not go in" gauge is made longer than the smaller gauge, so that one look will be sufficient to inform the operator which end is the larger. As it seems natural to assume that the longer end is the larger in diameter, it is recommended that it be made thus.

SNAP GAUGES.

42. Definite Size Snap Gauges.—A **snap gauge** has its own sphere of usefulness, being superior for some work to a ring gauge. In the first place, a snap gauge is adapted to measuring work having a cross-section other than round; for cylindrical work done between centers, it is not

necessary to take the work out of the lathe to test it; it is also claimed that a deviation from the true size can be more readily detected by it than by a ring gauge. Furthermore, by applying it in several directions, the roundness of work can be tested. This cannot be done with a ring gauge. It is easy to conceive that an alleged cylindrical piece of work may apparently be a very good fit in a ring gauge, and be slightly oval at the same time. Unless the divergence from a circle is rather great, the ring gauge will not show it; the snap gauge will show a very minute deviation, however. It can also be used for measuring a neck between two collars.

43. Snap gauges may be designed in a great variety of forms, to suit different purposes and conditions. The most common form of an external gauge is that shown in Fig. 18. In order to pass over cylindrical work, the depth of the opening must be slightly more than the radius of the piece; that is, slightly over half the gauge size. When a snap gauge of this kind is intended for flat work, the depth of the opening is to be made to suit the work. In order that the size of the gauge may be retained, a male

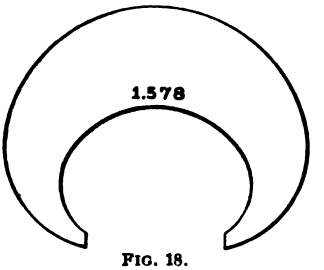

FIG. 18.

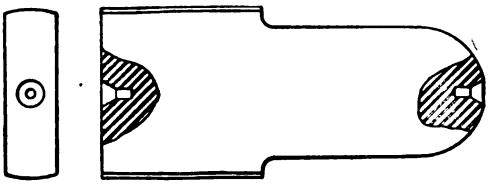

FIG. 19.

end gauge may be made; if the size of the snap gauge must be very accurate, a male gauge is absolutely required in order to produce the correct size of opening. When snap gauges take the place of plug and ring gauges, the plug gauge is replaced by the male snap gauge shown in Fig. 19. This, in its simplest form, is a flat piece of tool steel with a

handle formed on one end and circular measuring surfaces of the correct diameter at the other end. When the male snap gauge is intended solely for holes or slots of rectangular cross-section, the measuring surfaces are usually made to form parallel plane surfaces that are the correct distance apart.

44. Snap Limit Gauges.—For many classes of work, the snap gauge may advantageously be used as a limit

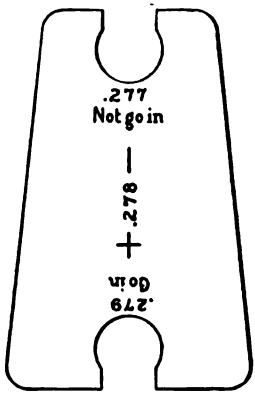

FIG. 20.

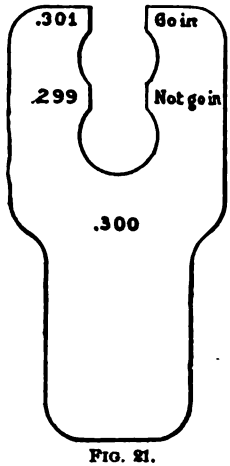

FIG. 21.

gauge. It may then be formed with an opening at each end, as shown in Fig. 20. It is a good idea to make the ends of the gauge of different shape, in order to make a distinction between the large and small opening; thus, the gauge may taper on the outside, being largest at the end that has the larger opening. A limit snap gauge may often be made advantageously of the form shown in Fig. 21. If thus made, the work can be gauged without reversing the gauge, thus effecting a saving of time and muscular effort on the part of the operator.

45. The degree of accuracy with which a snap gauge must represent its nominal size naturally determines the method by which it is to be made. Thus, if the gauge is accurate enough if within .01 inch of its nominal size, and if slight wear is unobjectionable, it would be a decided waste

of time to finish the gauge dead true to size by grinding and lapping. If the limit of variation is not to exceed .001 inch, grinding will usually have to be resorted to, and if the wear is to be kept down to a minimum, lapping becomes essential after grinding.

46. Making Snap Gauges.—Except when the size of the female gauge is so large that an inside micrometer can be applied, the male gauge has to be made first; the female snap gauge is then finished to fit the male gauge. If the male gauge simply serves the purpose of a reference gauge to preserve the gauge size, it may conveniently be a cylindrical bar having its end squared nicely and finished to the correct size. A good way of making such a bar is shown in Fig. 22. A piece of tool steel about ½ inch longer than the male gauge is to be, is turned between centers, and then necked down on both ends, as shown. The two disks thus formed are intended to be broken off finally, in order to get rid of the centers. After turning, harden at the ends or all over, according to size. Grind the outside straight and true and then break the disks off. After this is done, the ends are ground square and flat in a grinding machine, holding the gauge in a chuck and finishing to within a small amount of the finished size. The final bringing to size is to be done by lapping.

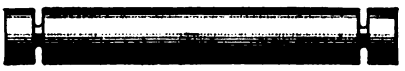

FIG. 22.

In order to insure parallelism of the two measuring surfaces, it is recommended that the device shown in Fig. 23 be used for lapping. This little device may be made of any suitable piece of scrap that is handy. As shown, it has a central hole bored to a good sliding fit for the gauge. A narrow ring of liberal outside diameter is faced off square with the hole; this may be done at the same chucking in which the hole is bored, or by mounting the device on a true running arbor after boring the hole and then facing it while running the arbor between the centers. The male gauge is inserted into the hole and pushed down level with the faced

end; by moving the device to and fro on a small, planed, cast-iron plate charged with fine emery and oil, the ends of the gauge may be lapped true and square, and parallel to each other.

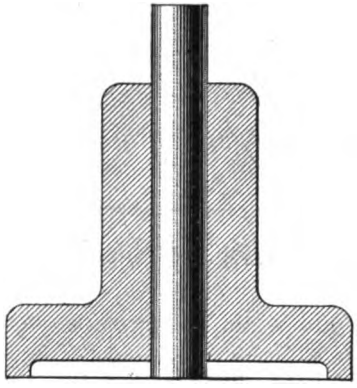

FIG. 23.

Frequently, it is most convenient to make the male gauge from drill rod, which is true and straight enough not to require any finishing on the outside. If the gauge is hardened at the ends only, there will be little danger of springing it. A gauge made from drill rod is ground on the ends and then lapped in the same manner as was just explained.

Flat gauges of the form shown in Fig. 19 are to be ground to size after hardening, leaving them about .0005 inch over size. They are then reduced to accurate size by careful oil-stoning with a very fine Arkansas stone.

47. Male gauges that have their measuring surfaces parallel and forming plane surfaces are ground straight and

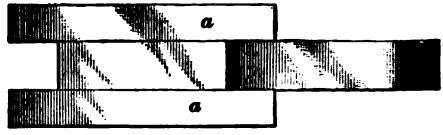

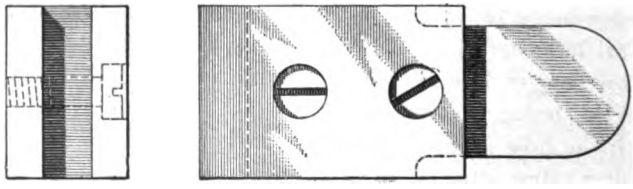

FIG. 24.

parallel in a surface grinder. In order to last well, they

should have their measuring surfaces finished by lapping. Evidently, lapping can only be done either by rubbing the measuring surfaces on a lap charged with the necessary abrading material, or by rubbing the lap over the surfaces. In either case, there will be a tendency to lap the surfaces "crowning." To overcome this difficulty, hardened pieces of steel, as *a*, *a*, in Fig. 24, may be temporarily fitted to the sides of the gauge and ground at the same time the gauge is ground. The lapping operation will then round the surfaces of these guard pieces, but leave the gauge surfaces flat. When the gauge is lapped to size, the guard pieces are removed and thrown away.

Female snap gauges can be ground after hardening by using the method shown in Fig. 25. If no suitable grinding machine is available, any engine lathe can be used. Mount a thin and large emery wheel that has been recessed, as shown, on an arbor between the lathe centers. Put a small pulley on the arbor and drive from any convenient overhead pulley. Clamp the gauge to the top of the slide rest; clamp guard pieces of hardened steel, as *a*, *a*, to each side of the gauge and on the top and bottom; then grind by feeding in by means of the cross-feed screw. Finish by lapping to size and then remove the guard pieces. With reasonable care, a very good job can thus be made.

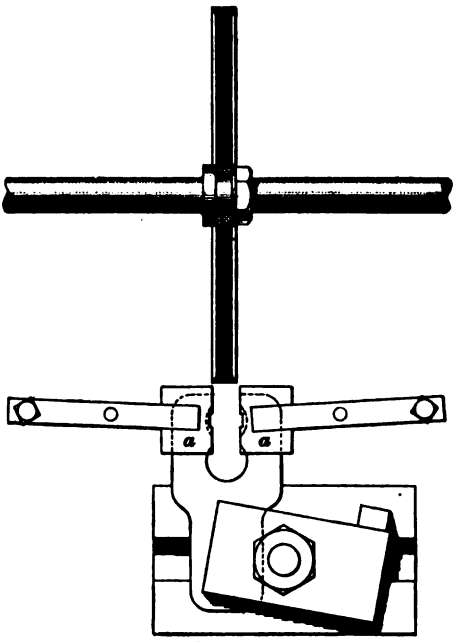

FIG. 25.

TOOLMAKING.

(PART 4.)

GAUGES AND GAUGE MAKING.

ANGULAR GAUGES.

1. Names of Angular Gauges.—Gauges for angular measurements are made to represent either definite angles or tapers, which are the equivalent thereof. When they represent tapers, they are most commonly known as *taper gauges*, and their size is expressed bv the taper in inches per

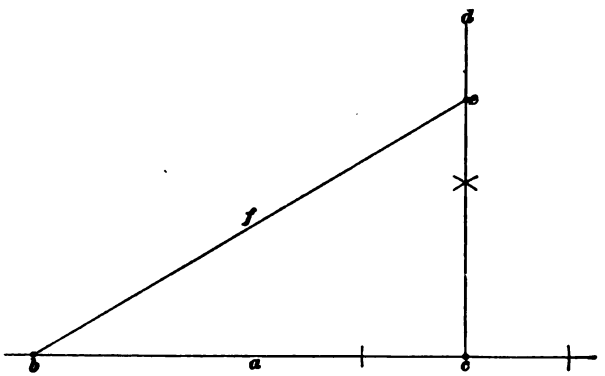

FIG. 1.

foot they represent. Angular gauges have their sizes expressed in degrees and minutes, although, occasionally, they receive a special name. Thus, an angular gauge measuring a 90° angle is most commonly known as a *try square;*

Copyright, 1901, by THE COLLIERY ENGINEER COMPANY.
Entered at Stationers Hall, London.
All rights reserved.

a gauge measuring an angle of 180° is familiarly called a *straightedge*, and a gauge that represents a 60° angle, from its most general application, is best known as a *thread gauge*.

2. Laying Out Angles. — Angular gauges may be made in different ways, according to the degree of accuracy required. If only a reasonable degree of accuracy is required, the given angle or taper may be laid off on a piece of sheet steel, which is then filed to the lines scribed thereon. If this method of construction is considered accurate enough, an angle may be laid off most conveniently by the aid of a table of natural sines and tangents. Scribe a straight line, as *a* in Fig. 1, on the surface of the piece of steel. Make two very fine center-punch marks, as *b* and *c*, on this line

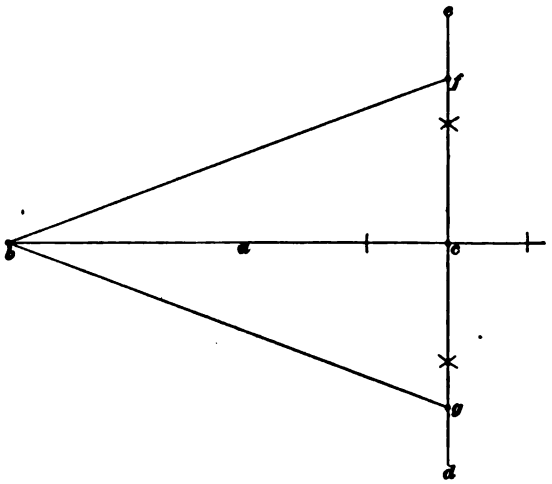

FIG. 2.

and as far apart as circumstances permit. At *c* erect a perpendicular, as *c d*. Measure the distance *b c* as accurately as possible with a steel scale, preferably with a decimally divided scale. From a table of natural tangents, take the tangent of the required angle and multiply the distance *b c* by this tangent. Then, on *c d* lay off as accurately as possible the product of *b c* and the tangent, marking it by a fine center-punch mark, as *e*, made on the line *c d*. Scribe a line

through *b* and *e*; the angle *e b c* included between the lines *a* and *f* is the required angle.

3. When the required angle is greater than 45°, it is more convenient to use the method shown in Fig. 2. Scribe the line *a* and on it lay off *b c* as long as convenient. At *c* erect the perpendicular line *d e*. From a table of natural tangents, take the tangent corresponding to one-half the required angle; multiply the distance *b c* by this tangent and lay off the distance thus found on both sides of *c*, marking it at *f* and *g*. Join *f* and *g* to *b* by straight lines. The angle *f b g* is then the required angle.

4. When the required angle is greater than 90°, instead of laying off that angle, its supplement is laid off. Subtract the required angle from 180° and lay off the angle thus found. Thus, if the required angle is 110°, lay off the angle *b a c*, Fig. 3, equal to 180° − 110° = 70° by the method given in Art. **3.** The angle *d a b* is then 110°.

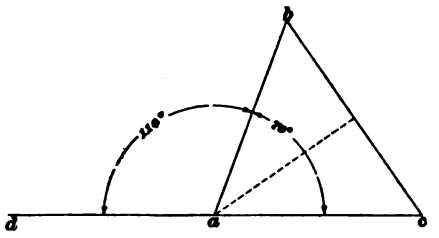

FIG. 3.

5. The correctness with which an angle can thus be produced naturally depends on the skill of the workman in working to the scribed lines and on the accuracy with which they have been located. As a general rule, it may be stated that a much greater degree of accuracy can be obtained by this method than is possible by laying off angles with the ordinary bevel protractor made for machine-shop work. All other factors remaining as before, the accuracy attainable will be greater as the base line, as *b c*, Figs. 1 and 2, or *a c*, Fig. 3, is made longer.

6. Different Definitions of Taper. — When an angular gauge is ordered to represent a certain taper per foot, the toolmaker should find out by inquiry, first of all,

what the person ordering the gauge understands by the term "taper." Unfortunately, the term has no definite meaning, being used in different senses in different localities. Referring to Fig. 4 (*a*), the taper is defined by some as the difference in diameters ($d-d'$) per foot of length, the taper in all cases being expressed in inches and fractional parts of an inch. The measurements for diameter are made on lines perpendicular to the axis, which is also the line bisecting the angle made by the sides *a b* and *e f* of the tapering piece. In Fig. 4 (*b*) the difference in the radii ($r-r'$)

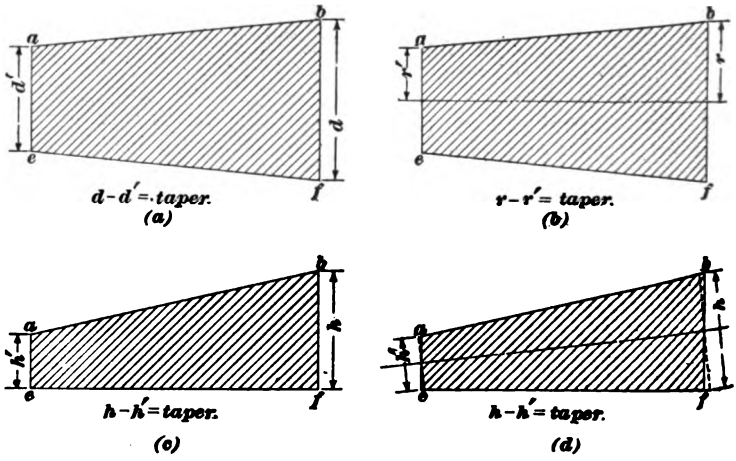

FIG. 4.

per foot of length is considered as the taper. In this case, the measurements for the taper are made on lines perpendicular to the axis, or line bisecting the angle included between *a b* and *e f*, but only to one side of the axis. Evidently, if the taper is expressed in accordance with Fig. 4 (*b*), it will be only one-half that of Fig. 4 (*a*), but yet the angle included between *a b* and *e f* will be the same in either case.

When the taper of flat work, as keys or wedges, is measured, probably the most common way is to take one side, as *e f*, Fig. 4 (*c*), as a base line and measure the taper by the difference ($h-h'$) in height of perpendiculars, as *e a* and *f b*,

erected at the ends of the base line. Many persons will measure the taper of flat work in the manner shown in Fig. 4 (*d*). Here the difference in height is measured to both sides of a line bisecting the angle included between the sides *a b* and *e f* and on lines perpendicular to the bisecting line. This method is the same as that shown in Fig. 4 (*a*). Now, on first thought it would seem, when comparing two pieces of the same nominal taper, of which one has been measured according to Fig. 4 (*c*) and the other according to Fig. 4 (*d*), as if there were no difference in the angles

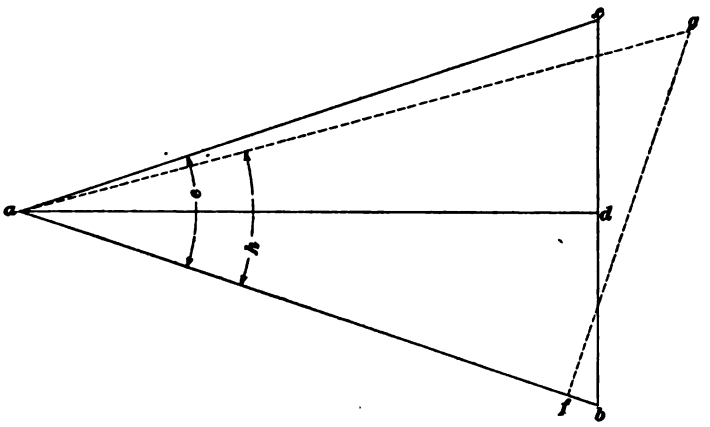

FIG. 5.

included between *a b* and *e f*. There is a decided difference, however, as can be seen by referring to Fig. 5. In this figure, the triangle *a f g* represents a taper of 8 inches per foot measured in accordance with Fig. 4 (*c*). The triangle *a b c* also represents a taper of 8 inches per foot, but measured in accordance with Fig. 4 (*d*). Now, inspection shows that there is a decided difference in the angles *e* and *h*.

The foregoing discussion will make plain the importance of finding out what is meant by "taper" before starting in to make a gauge.

7. Laying Out a Taper Gauge.—If a **taper gauge** is to be laid out on sheet steel, the method of laying it out naturally depends on the method by which the taper is measured. Suppose a taper gauge is to be made for a flat wedge that is 3 inches long on one side and 1 inch high at the thick end. The taper is to be 1 inch per foot, and the person ordering the gauge wants the taper to be measured by taking the measurements perpendicular to one side, that is, as shown in Fig. 4 (*c*). Then, before the lines can be scribed on a sheet-steel gauge, the height at the thin end of the wedge must be calculated. If the taper is measured as shown in Fig. 4 (*a*), (*c*), or (*d*), the difference in height, or in diameter in case of round work, may be found by the following rule:

Rule.—*Divide the given length by 12 and multiply by the taper.*

When applying this rule to a taper measured as in Fig. 4 (*d*), it is to be observed that it gives the difference in height of lines the given distance apart and perpendicular to the line bisecting the angle, on which line the given distance is measured. If the taper has been measured as shown in Fig. 4 (*b*), the result given by the rule must be doubled to obtain the difference in diameters.

Applying the rule given, we get for the case under consideration, $\frac{3 \times 1}{12} = \frac{1}{4}$ inch as the difference between the large and small ends. Then, the small end is evidently $1 - \frac{1}{4} = \frac{3}{4}$ inch high. The laying out of the gauge is now a simple matter. Draw a straight line 3 inches long; erect perpendiculars at the ends $\frac{3}{4}$ inch and 1 inch high, and join the ends of the perpendiculars by a straight line. Then cut out the metal and file to the lines.

When the taper has been measured in accordance with Fig. 4 (*a*) or (*d*), scribe a straight line of the required length and at its ends erect perpendiculars. Lay off half the heights (or diameters) on each side of the line first scribed and join the ends of the perpendiculars by straight lines.

8. When making a sheet-metal taper gauge or angular gauge, it is not advisable to cut the metal out with a chisel, since this may spring it considerably out of true. It is better to saw the metal out with a hack saw, or drill a row of holes close together and then cut through the metal remaining between the holes with a saw or file.

9. Originating Tapers and Angles. — The most accurate way of originating a taper or an angle (except a 60°, 90°, and 180° angle) is shown in Fig. 6. The same

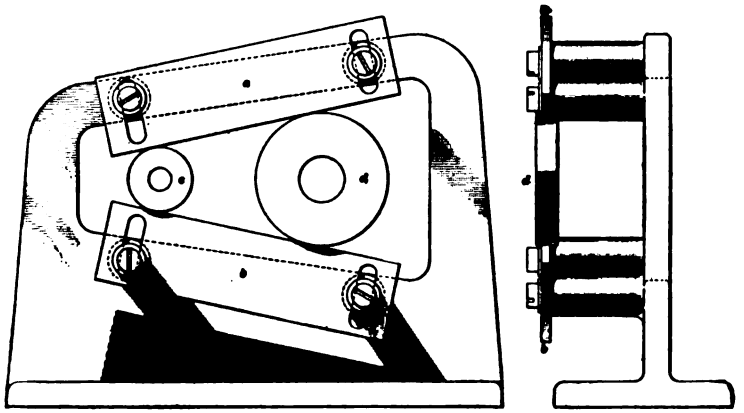

FIG. 6.

principle that is involved in originating a taper or angle allows the same method to be used to measure accurately a taper or angle whose exact measure is not known.

In Fig. 6, *a* and *b* are two straightedges that are ground and lapped as near true as possible. They are so mounted in a suitable frame that they can readily be shifted and then locked rigidly. Steel disks *c* and *d* ground and lapped truly cylindrical and of any convenient diameter are placed between the straightedges and in contact with them. Then, the diameters of the disks and their center-to-center distance, all of which dimensions can be accurately measured, definitely determine the taper included between the straightedges, or the angle, and these data can then be calculated by the following rules.

10. If the taper is measured in accordance with the method shown in Fig. 4 (*a*) and (*d*), the taper included between the straightedges is calculated as follows:

Rule.—*Divide the difference in the diameters of the disks by twice their distance from center to center. From a table of natural sines, take the angle corresponding to the quotient. Then, in a table of natural tangents, find the tangent corresponding to this angle. Multiply the tangent by 24.*

If the taper is measured in accordance with Fig. 4 (*b*), divide by 2 the result obtained by the rule just given.

EXAMPLE.—The disks being 2 inches and 4 inches in diameter, and their center-to-center distance being 4.5 inches, (*a*) what is the taper in inches per foot if measured in accordance with Fig. 4 (*a*) or (*d*)? (*b*) What is the taper if measured as in Fig. 4 (*b*)?

SOLUTION.—(*a*) Applying the rule given, we get $\frac{4-2}{2\times 4.5} = .22222$ as the sine. The nearest angle is 12° 50′. The tangent corresponding to this angle is .22781. Then, the taper is $.22781 \times 24 = 5.4674$ inches per foot. Ans. (*b*) Dividing answer in (*a*) by 2, we get $5.4674 \div 2 = 2.7337$ inches per foot. Ans.

11. If the taper is measured according to Fig. 4 (*c*), use the following rule:

Rule.—*Divide the difference in the diameters of the disks by twice their distance from center to center. Find the corresponding angle in a table of sines; double the angle thus found and find its tangent. Multiply the tangent by 12.*

EXAMPLE.—Taking the same values as in the previous example, what will be the taper per foot if measured in accordance with Fig. 4 (*c*)?

SOLUTION.—Applying the rule just given, we get $\frac{4-2}{2\times 4.5} = .22222$ as the sine. The nearest angle is 12° 50′. Doubling this angle, we get 25° 40′. The corresponding tangent is .48055. Then, the taper is $.48055 \times 12 = 5.7666$ inches per foot. Ans.

12. When the taper in inches per foot is given, to find the diameters of the disks and their center-to-center distance:

Rule.—*Assume the diameters of the disks as dictated by judgment. Divide the taper by 24, if the taper is measured*

in accordance with Fig. 4 (a) or (d). If measured in accordance with Fig. 4 (b), divide the taper by 12. From a table of natural tangents, find the angle corresponding to the quotient. Then, from a table of natural sines, take the sine corresponding to the angle. Finally, divide the difference in the diameters of the disks by twice the sine.

EXAMPLE.—If a taper of 2 inches per foot is to be originated, what must be the center-to-center distance of the disks, assuming them to be 2 inches and 3.5 inches in diameter, (*a*) if the taper is measured according to Fig. 4 (*a*) and (*d*)? (*b*) if the taper is measured according to Fig. 4 (*b*)?

SOLUTION.—(*a*) By the rule just given, $2 \div 24 = .08333$. The nearest angle corresponding to this tangent is 4° 46′. The sine of this angle is .0831. Then, $\frac{3.5 - 2}{.0831 \times 2} = 9.0253$ inches. Ans. (*b*) $2 \div 12 = .16666$. The nearest angle corresponding to this tangent is 9° 28′. The sine of this angle is .16447. Then, $\frac{3.5 - 2}{.16447 \times 2} = 4.560$ inches. Ans.

13. When the taper is given in accordance with Fig. 4 (*c*), assume the diameters of the disks as dictated by judgment. Then, to find their center-to-center distance:

Rule.—*Divide the taper by 12. From a table of natural tangents, find the corresponding angle. Find the sine of half the angle thus found, and divide the difference in the diameters of the disks by double the sine.*

EXAMPLE.—If the disks are 2 inches and 3.5 inches in diameter, what must be their center-to-center distance to produce a taper of 2 inches per foot measured in accordance with Fig. 4 (*c*)?

SOLUTION.—Applying the rule just given, $2 \div 12 = .16666$. The nearest angle corresponding to this tangent is 9° 28′. Half of this angle is 4° 44′. The sine corresponding is .08252. Then, $\frac{3.5 - 2}{.08252 \times 2} =$ 9.0887 inches. Ans.

14. It occasionally happens that it is desired to find the angle included between the lines *a b* and *e f*, Fig. 4, when the taper is given. Then, if the taper is measured as in Fig. 4 (*a*) and (*d*):

Rule.—*Divide the taper by 24. Look up this value in a table of natural tangents and double the corresponding angle.*

EXAMPLE.—What angle corresponds to a taper of 3 inches per foot, if the taper is measured as in Fig. 4 (*a*) and (*d*)?

SOLUTION.—By the rule just given, $3 \div 24 = .125$. The nearest angle is 7° 8′, and twice this angle is 14° 16′. Ans.

15. If the taper is measured as in Fig. 4 (*b*):

Rule.—*Divide the taper by 12. Find the corresponding angle in a table of natural tangents and double it.*

EXAMPLE.—A taper of 3 inches per foot is given in accordance with Fig. 4 (*b*). What is the angle?

SOLUTION.— $3 \div 12 = .25$. The nearest angle is 14° 2′. Then, the required angle is $14° 2' \times 2 = 28° 4'$. Ans.

16. If the measurement for taper is made according to Fig. 4 (*c*):

Rule.—*Divide the taper by 12. From a table of natural tangents, find the angle corresponding to the quotient.*

EXAMPLE.—What angle corresponds to a taper of 3 inches per foot measured as in Fig. 4 (*c*)?

SOLUTION.— $3 \div 12 = .25$. The nearest angle = 14° 2′. Ans.

17. When the straightedges of Fig. 6 are to be set to a given angle by means of the disks, their center-to-center distance may be found as follows:

Rule.—*Take the sine of half the angle from a table of natural sines. Divide the difference in the diameters of the disks by double the sine.*

EXAMPLE.—If an angle of 20° is to be originated, and the disks are 2 inches and 4 inches in diameter, what must be their center-to-center distance?

SOLUTION.— $20° \div 2 = 10°$. The sine of 10° = .17365. Then, $\frac{4 - 2}{.17365 \times 2} = 5.7587$ inches. Ans.

18. In case it is desired to measure the angle included between the straightedges:

Rule.—*Divide the difference in the diameters of the disks by twice their center-to-center distance. From a table of natural sines, take the angle corresponding to the quotient and double it.*

EXAMPLE.—The disks being 2 inches and 5 inches in diameter, and 5 inches from center to center, what is the angle included between the straightedges?

SOLUTION.— $\frac{5-2}{2\times 5}=.3$. The nearest angle is 17° 27′. Then, 17° 27′ × 2 = 34° 54′. Ans.

19. If the center-to-center distance calculated by any of the rules previously given is less than half the sum of the diameters of the disk, either one of the disks must be made smaller or the other one larger, and the calculation repeated until the distance becomes larger than half the sum of the diameters.

The center-to-center distance can be measured in two ways: Measure the distance between the disks and add half the sum of the diameters; or measure the distance over the outside of the disks and subtract half the sum of the diameters.

20. In order to originate an accurate taper gauge for flat work, the device shown in Fig. 6 is set to the given taper. A male gauge is then fitted to it, continuing the fitting until no daylight can be seen when the gauge is placed between the straightedges. The female gauge is then carefully fitted to the male gauge just made; it thus becomes a duplicate of the taper (or angle) included between the straightedges. If necessary, either one of the pair of gauges is kept as a reference gauge to show wear of the other.

21. Taper gauges for round work (conical work) are made both as male and female gauges. The device is first set to the angle (or taper) required; the plug gauge is then ground until no daylight can be seen when it is placed between the straightedges. The female or ring gauge is next ground until it exactly fits the plug gauge, using the finest grade of Prussian blue as a marker to show the fit.

22. Originating a 60° Angle.—A 60° angle can be originated most readily by the method first used by Pratt & Whitney for originating a standard with which thread

gauges could be compared. The principle made use of is that in an equilateral triangle each interior angle is equal to 60°. Then, if three bars are made, as *a*, *b*, and *c*, Fig. 7,

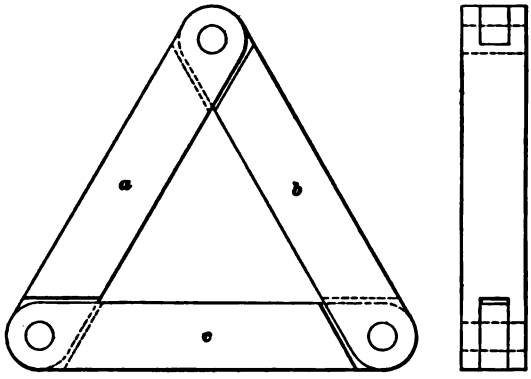

FIG. 7.

each of them exactly equal to the other, and with the holes the same distance apart and in the same relative positions in regard to the sides, the center lines of these bars when connected by pins passing through the holes will form an equilateral triangle; and, as the inside and outside surfaces of the bars are parallel to the center line, all angles included between the inside or outside of the bars will be 60° angles.

23. Making a Try Square.— A 90° angle may be originated in several ways. The first method here given will produce two **try squares,** both of which, if skilfully made, will be about as correct as it is possible to produce them. There is one appliance necessary, however, on the truth of which the correctness of the try squares will depend. This appliance may be either a straightedge or a surface plate; either one of them may be used, but is absolutely required to be as true as skill and ingenuity can make it.

When making try squares, it is easiest, as a general rule, to do all truing on the blade, since the amount of metal to be removed is usually quite small. Then, to make the try squares, finish the stocks by grinding their top and

bottom surfaces parallel and as near plane as possible. A surface-grinding machine is invaluable for this work. If it has to be done by hand, great care is required to make as good a job of it as can be done by the surface-grinding machine. The two stocks having been finished, insert and fasten the blades, which have been previously ground true and parallel. Select the square that seems to be the most accurate, using judgment in the selection. Fit the other square to it until they fit either way, when stock is placed against stock and blade against blade, as shown in Fig. 8 (*a*).

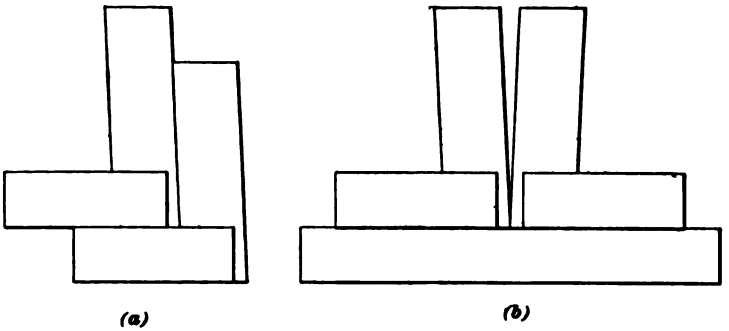

FIG. 8.

The two squares are now duplicates of each other, but it is not known as yet whether the angle between stock and blade is correct, or if not, which way the squares are out. To test this, place both squares blade to blade on a surface plate or straightedge, as shown in Fig. 8 (*b*), and with the stocks resting on the surface plate or straightedge, observe if the blades are in contact with each other throughout their length. If they touch so that no daylight can be seen between them, both squares are correct. Suppose, however, that there is an opening at the top, as shown in Fig. 8 (*b*). Then, this shows that the angle between stock and blade is smaller than 90°; conversely, if the opening is at the bottom, the angle is larger than 90°. Next, take one of the squares and shift its blade one-half the amount indicated. If the shifting must be done by grinding the blade, grind off the probable amount on one side and then make the other side

absolutely parallel to it. Now, fit the second square to the first square just corrected; place them blade to blade again on the surface plate or straightedge, and repeat the cycle of operations until the squares will fit when placed stock to stock and blade to blade. Both squares will then be correct.

24. Testing Try Squares.—If a try square is to be tested for correctness, the most obvious way is to compare it with a test or reference try square. If there is none at hand and circumstances permit, an excellent substitute for a test square may be made as shown in Fig. 9. Take a piece of good machinery steel or well-annealed tool steel having a length not less than the length of the blade of the try square, and a diameter of not more than the inside length of the stock. Recess one end about $\frac{1}{16}$ inch deep, making the diameter of the recess about $\frac{1}{8}$ inch less than the outside diameter. Turn the outside true and straight; slightly bevel the edge at the recessed end and then finish by grinding and lapping between dead centers, and finally, without previous removal from the grinding machine, accurately face the annular ring at the cupped end. Obviously, if the cylinder is finished true and straight, the angle between the plane of the ring and the cylindrical surface is a right angle.

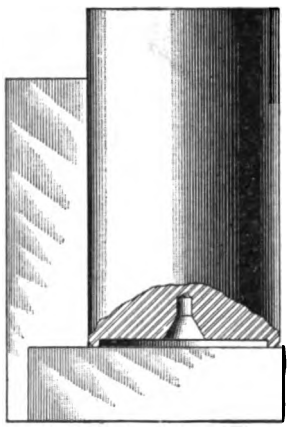

FIG. 9.

Since there should not be any difficulty in lapping the device straight within a variation of .00002 inch, and since the ring can be ground to be in a plane perpendicular to the axis within an insensible amount of variation, it is believed that this is the most accurate method of originating a 90° angle that has been devised. This device may be used for testing the truth of the inside and outside angles of a try square. To test the inside angle, the try square is applied

directly to the device, as shown in Fig. 9. To test the outside angle, the device and try square are both placed on a surface plate and brought in contact with each other. Practical considerations will fix a limit within which this device can be used. These considerations are the weight allowable and the facilities for grinding and lapping; from these, the toolmaker can readily determine the limits within which the method just given is applicable.

25. A simple method of testing try squares intended for comparatively rough work is shown in Fig. 10. One

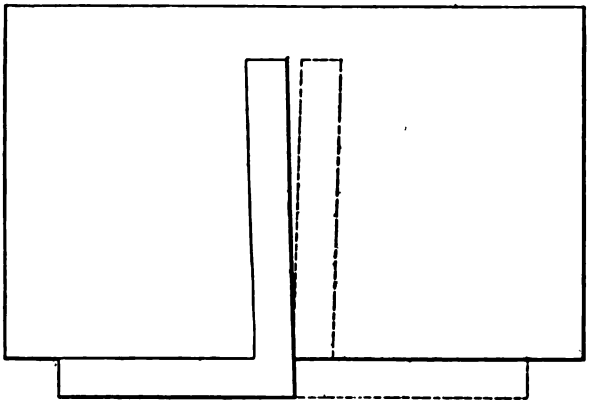

FIG. 10.

edge of a wooden or metal plate that forms a fair approximation to a plane surface is trued up to a straightedge. The stock of the square is then placed against this edge and a faint line is scribed along the blade. The square is now reversed, as shown in the dotted lines; if the blade coincides with the scribed line, the square is true. If the blade is farther away from the line at the top than it is near the stock, it shows that the angle is less than 90°; conversely, if it is farther away near the stock than at the end of the blade, the angle is larger than 90°. This method shows double the error.

26. Making a Test Block.—A refined method of making a test block for testing try squares was made public

in 1896 by Mr. G. A. Bates, an expert toolmaker of Brooklyn, New York. The construction of the test block is shown in Fig. 11. It consists of a rectangular cast-iron frame *a*, which has a groove of rectangular cross-section all around its circumference. The sides of the groove are finished straight and parallel by planing or milling. Four separate blades, as *b*, *b*, are closely fitted to the groove in the frame; they are connected to the frame by well-fitted fulcrum pins *c*, *c* located near one end of the blades. The

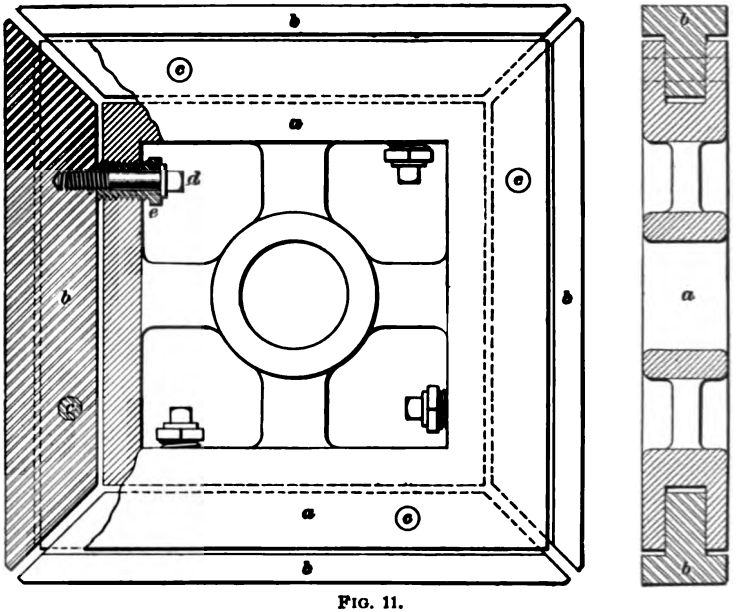

FIG. 11.

end of the blades opposite the pins is connected to the frame by small bolts, as *d*, which fit tapped holes in the blades and pass through a clearance hole in setscrews, as *e*; these setscrews are fitted to holes tapped in the frame. Evidently, by moving the setscrews and setting up the locking bolts, each blade can be rotated slightly around its fulcrum and then locked in position. While the blades are shown as having a T shape, they may be made rectangular as well, or, if considered desirable, the edges

projecting from the frame may be thinned down by beveling. The measuring surfaces of the blades are filed and scraped so as to make true plane surfaces, scraping them either to a true surface plate or to a true straightedge. It should be remembered that the value of the test block depends, to a large extent, on the straightness of the measuring edges; hence, these must be made as perfect as skill and ingenuity can make them. The setscrews *e* and locking bolts *d* should have a rather fine pitch of thread, say 40 threads per inch, or even finer, as a sensitive adjustment can then be readily obtained. The screws *e* must be a good snug fit, since any looseness would destroy the value of the testing block.

27. In order to set the test block so that any two adjacent blades are at a right angle to each other, a temporary try square is made out of sheet iron or sheet steel. A very convenient form of such a try square is shown in Fig. 12. Instead of finishing the inside of the blades throughout their length, they are cut away in order to leave the small projections shown. When any change is required, it is easier to dress down the projections than to refinish the blade throughout its length.

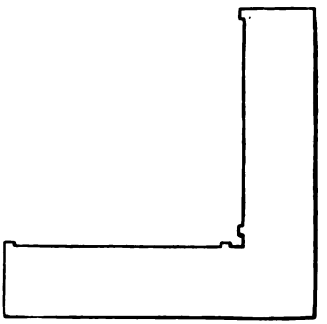

FIG. 12.

The try square having been finished until it is believed to be fairly accurate, it is applied to two adjacent blades of the test block. One of these blades is then adjusted until both blades fit the temporary try square. Suppose the try square has been used on the top and right-hand blade of the test block and that the top blade has been adjusted. Then, it is next applied to the top and left-hand blade; the latter is now adjusted to fit the try square. The bottom blade is finally adjusted from the left-hand blade and to the try square; on

applying the try square to the bottom and right-hand blade, any error of the try square will be shown multiplied four times. The try square is now corrected and the blades of the test block readjusted. These operations are repeated until the try square fits exactly all around the test block; when this is the case, any two adjacent blades of the test block are at a right angle to each other, and the try square is also truly square.

28. Originating a Straightedge. — A correct straightedge can be produced either by fitting it to an absolutely correct surface plate, or it can be originated in accordance with the following axiom: *Three straightedges cannot fit one another unless all three are straight.* The facilities at command of the toolmaker will determine which method is to be used.

Three straightedges having been finished all over, select one of these as a trial straightedge; preferably select the

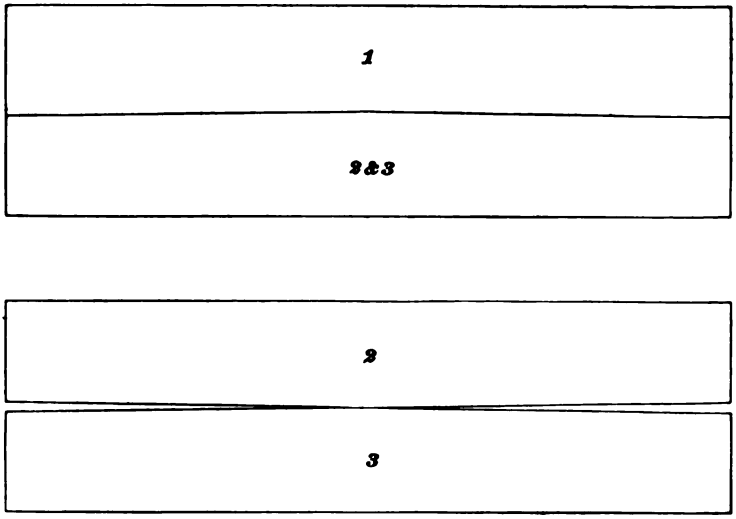

FIG. 13.

one that is believed to be nearest correct. Mark this *1*, and mark the two others *2* and *3*, respectively. Carefully fit straightedges *2* and *3* to *1*, as shown in Fig. 13, until no

daylight can be seen between *1* and *2* and *1* and *3* when holding them up against a strong light. This done, place *2* and *3* together, as shown in the illustration. Any deviation from a straight line will now show double. Take one of these two equal straightedges, say *2*, and reduce its error. Use this as a trial straightedge and fit *1* and *3* to it. Place *1* and *3* together, observe the error and reduce it on number *3*. Use *3* as a trial straightedge and fit *1* and *2* to it. Place *1* and *2* together, reduce the error of *1* and use it as a trial straightedge once more, fitting *2* and *3* to it. Repeat these operations until all three straightedges fit one another; all three will then be straight.

It is not possible to use fewer than three straightedges, since two straightedges can be perfectly fitted to each other, and be a perfect fit on each other in any position in which they are placed, without being anywhere near true.

29. Forms of Straightedges. — Straightedges are made in various forms. Most generally they are made rectangular in cross-section, and of uniform width throughout their length. They must then be made wide and thick enough to give stiffness sufficient to prevent any sensible deflection with reasonable care in their use. If their width is made equal to .12 times the length increased by .6 inch, and their thickness equal to .005 times the length increased by .05 inch, a satisfactory degree of stiffness can usually be obtained, provided the length of the straightedge does not exceed 40 inches. Since toolmakers are by no means agreed upon what deflection is permissible, the proportions here given are to be considered as those that in the opinion of the writer will give satisfactory results.

30. Straightedges become more sensitive, that is, they will more readily show a minute deviation, as their measuring edge is made narrower. They are most sensitive when made so that they touch the work merely along a line; i. e., when they are in line contact with it instead of in surface contact. Then, carrying out this idea, a straightedge may be given sufficient thickness and width in order to give

stiffness, and it may be beveled at its measuring edge in order to give sensitiveness. Beveled straightedges are usually beveled sufficient to leave the measuring edge $\frac{1}{16}$ inch wide. When beveled off more than that, the cross-section bears a close resemblance to that of a knife blade, and the straightedge is then called a **knife-edge straightedge.**

A very satisfactory cross-section of a knife-edge straightedge is that adopted by Pratt & Whitney and shown in Fig. 14 (*a*). This form combines stiffness, lightness, and convenience of handling. The more common form is shown in Fig. 14 (*b*); it is simply beveled on both sides to give a narrow edge. In both forms of knife-edge straightedges, the actual testing edge *a* has a semicircular cross-section; in other words, the testing edge, instead of forming a plane surface, forms part of a cylindrical surface. When thus made, they can be held at a slight angle to the work, without in any way interfering with the correctness of the measurement. Hence, they are more easily used than straightedges in which the testing edge forms a plane surface; these must be held so that the testing surface is in contact all over with the surface to be tested, for if canted over so that one edge of the testing surface is in contact with the work, a wrong indication will be given if that edge should be out of true. As a general rule, in making straightedges with a plane-surface testing edge, little attention is paid to making the bounding edges of the testing surface absolutely straight; this would add considerably to the cost without gaining any particular advantage. Besides, the sharp edges would rapidly wear out of true.

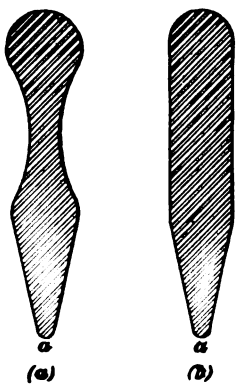

FIG. 14.

31. Knife-edge straightedges cannot be very readily originated by making three fit one another. The reason is that it is practically impossible to hold two of them together

so as to be in contact all along. On account of this difficulty, knife-edge straightedges are usually fitted to a straightedge having a plane-surface testing edge, or to an accurate surface plate.

32. Hardening Straightedges.—Straightedges intended for work in the shop are usually hardened on the testing edge, and occasionally all over. The object of hardening is to reduce the liability of wear. Since the hardening process sets up severe internal stresses, which are gradually released by the aging of the steel, hardened straightedges will occasionally become crooked and require refitting. If the edge alone is hardened and the back is left soft, this change of shape will, as a general rule, be small enough to be negligible. Straightedges intended for reference only, i. e., for testing working straightedges, may be left soft; large straightedges must usually be left soft on account of the difficulty of hardening.

33. To harden a straightedge on the edge only, place it between iron bars clamped to it, leaving the edge exposed. Heat evenly all over and then quench. The iron bars prevent the water from coming in contact with the back and sides, which are consequently left soft.

34. Finishing the Testing Edge. — To make a straightedge with a plane-surface testing edge, it should be ground as near straight as possible on a surface grinder, if hardened, and then finished by stoning and lapping. If left soft, it is finished by filing, scraping, and lapping. The straightedge having been finished very nearly true by filing with a dead smooth file, scraping is begun. A neat device for scraping, and one that has proved very useful in this connection, is shown in Fig. 15. For want of a better name, and from its resemblance to the carpenter's plane, it may be called a **scraping plane.** As shown in the figure, it consists of a body, one side of which, as *b*, is finished by planing to suit the shape of the straightedge that it is intended for. The scraping tool is set so that its cutting edge is at an angle of about 60° with the line of motion of

the plane; it will then take a shaving cut. The edge of the scraping tool slightly projects beyond the surface *a*, say about .0005 inch. It is stoned to a very keen edge, as near straight as possible; if made with a triangular cross-section of cutting edge, as shown, it will cut both ways, and make a very good job if supplied with plenty of lard oil and kept

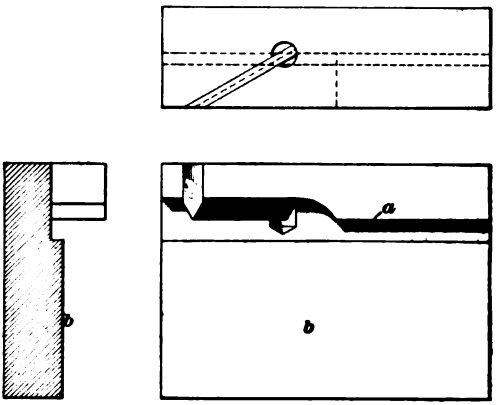

FIG. 15.

sharp. Suppose now that the plane is held with its surface *b* against the side of the straightedge, and, with the scraper resting on the testing edge, is moved back and forth. Then, it follows that, the scraper being prevented from canting over to one side or the other, the angle between the side of the straightedge and its measuring edge will be constant throughout the length.

In the illustration, the scraping tool is shown as being held in place by friction; if well fitted to the sides of the slot, this will be sufficient. If considered necessary, it may be held in place by a key, or by screws; adjusting screws for setting it out may also be provided.

35. For the final finishing by lapping, a small L-shaped piece of cast iron may be provided. If the lapping is then done with one leg of the lap resting against the side of the straightedge, the lap cannot be canted to one side or the

other, and, consequently, a good job can be done more rapidly than could be done otherwise.

36. Knife-edge straightedges, while the most sensitive straightedges that have been devised, are, at the same time, the most difficult ones to make. After grinding them as nearly straight and true as circumstances permit, they must be finished by oilstoning with a very fine Arkansas oilstone, frequently comparing them with a plane-surface straightedge. No special directions that could be given will make their production an easy matter; it is a matter of patiently stoning down the high spots until the knife edge fits the reference straightedge all along at any angle within range at which it may be held.

37. Very large straightedges, say above 40 inches long, are rarely made as knife-edge straightedges; the usual plan is to make them in the form of a narrow surface plate and of cast iron. They may have a T shape, with a rib of ample depth and thickness to prevent deflection. Straightedges of this form are originated in the same manner as surface plates; one being kept as a reference straightedge, others may be made from it by comparison.

SPECIAL GAUGES.

38. Where a large number of pieces are to be made interchangeable, this quality can only be preserved by **limit gauges** so constructed as to caliper the piece in all essential directions. In some cases, one set of limit gauges will be sufficient; in others again, two or more sets may be required owing to the difficulty, if not impossibility, of gauging the work all over in one operation. Owing to the infinite number of shapes possible, no definite rules can be given as to the construction of special gauges; each case must be treated on its own merits, and the toolmaker must exercise his ingenuity as to the best way of designing and constructing the gauges. The only general directions that can be given are to make the gauges as simple, durable, and

capable of exact duplication as circumstances permit. Furthermore, always provide means of getting the work out of the gauge, or the gauge away from the work without ruining the gauge, in case the work should stick.

A few special cases of gauge making are given below; the gauges shown and the remarks made in regard to them are intended only as suggestions of how a gauge may be made for the pieces of work shown. It is not to be inferred that the way the gauges are made is, in each instance, the best method of construction possible and the only one applicable. Circumstances alter cases; while a gauge designed as shown may be eminently suitable for one set of conditions, it may be either too refined or not refined enough for other conditions and requirements.

39. In Fig. 16 (*a*) is shown a rather simple piece of work, which is finished on the edges in a profiling machine,

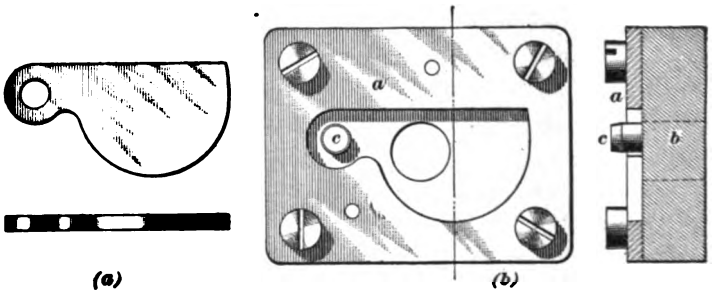

FIG. 16.

and has a hole through one end. The sides are to be parallel and of a given thickness. It is required to gauge the shape in relation to the hole; it is also essential that the hole and the thickness be correct. To gauge the hole, a cylindrical limit gauge may be employed; for the thickness, a limit snap gauge is best adapted; for gauging the shape, a gauge may be made as shown in Fig. 16 (*b*). The gauge consists essentially of a flat plate *a* pierced by a hole of the same shape and size as the work. This plate is mounted on a block *b*, which carries the pin *c*, and the latter serves to

locate the work properly in the gauge. The pin is made the minimum size allowable for the hole in the work. Then, if the work is placed over the pin and if it drops into the hole pierced through *a*, it is known that the shape of the piece is not over the size.

The degree of accuracy with which the work fits into the gauge is determined by ocular inspection. While the gauge shown determines whether the piece of work will go into place or not when the machine or device that it is intended for is assembled, it does not determine whether it is too small to satisfactorily perform its allotted function. But, if another gauge is made similar to that shown in Fig. 16 (*b*), preferably on the same block, and if this second gauge is made slightly below the minimum size permissible, a limit gauge would be thus obtained. In that case, if the work enters the smaller gauge, it is proved to be too small; if it refuses to enter the larger gauge, it is shown to be too large; but, if it enters the large gauge and does not enter the small one, it is correct in size within the amount of variation existing between the large and the small gauge.

In order that the work may readily be removed from the gauge, a large hole may be drilled through the block *b*, as shown in the illustration. The work is then pushed out of the gauge either with the fingers or with a small wooden or metallic rod.

40. A somewhat different case of gauging is shown in Fig. 17. In this instance, the object of gauging is to determine whether the center-to-center distance *a* of the holes is correct within the predetermined limit of variation. The simplest kind of gauge for this work is a plate with two fixed gauge pins of correct diameter placed the required distance apart. Such a gauge is open to one objection, however: If the pins happen to fit the holes in the work rather closely, it is quite difficult to remove the work from the pins after it has been forced on, since it is not an easy job to draw the work off squarely. This objection can be overcome by making one of the pins, as *b*, movable; it is then to be made a

good sliding fit in the body of the gauge. The other pin,

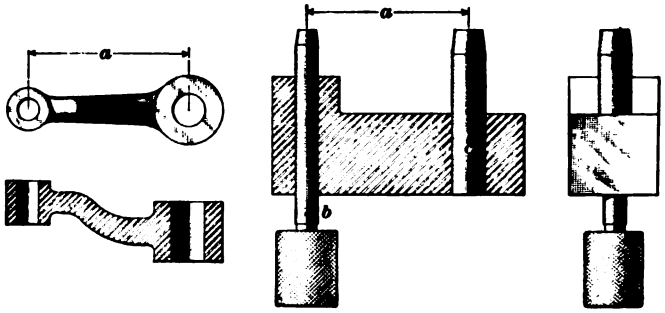

FIG. 17.

as *c*, is rigidly fixed. Withdrawing the movable pin allows the work to be readily drawn off the fixed gauge pin.

41. A pin gauge of the construction shown in Fig. 17 apparently forms at the same time a limit gauge. Referring to Fig. 18, let *b* and *c* be the gauge pins. Let them be placed 1.180 inches from center to center. Assume that the holes in the work, by previous gauging, have been proved to be larger than .449 and smaller than .451 inch. Then, obviously, the gauge pins must be made small enough to enter the holes when their size is the smallest permissible, i. e., .449 inch. Now, assuming that the holes are larger, say .451 inch, the work will go over the gauge when the side of the holes touches the inside of the gauge pins, as in Fig. 18 (*a*), or the outside of the gauge pins, as in Fig. 18 (*b*), and also when the center-to-center distance, for the size of hole assumed, varies between these two extreme positions. In the first extreme position, the center-to-center distance will be

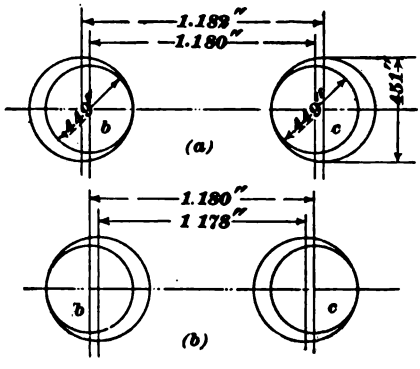

FIG. 18.

1.182 inches; in the other, it will be 1.178 inches. We thus obtain as the extreme limit of variation 1.182 inches — 1.178 inches = .004 inch, or, as the limit of variation in the size of the holes is .451 inch — .449 inch = .002 inch, a variation double that permitted in the size of the holes.

Now, suppose that the holes in the work happen to be the same size as the gauge pins. Then, the work will not enter at all unless the center-to-center distance of the holes coincides with that of the guide pins. If it varies but .001 inch from it, the gauge will not go into the holes; the work may thus appear worthless when in reality the holes may be located quite within the permissible limit of variation.

Now, suppose that the gauge pins are made smaller than the smallest size of hole permissible, say .002 inch, thus making their diameter .447 inch. Then, if they are placed 1.180 inches from center to center, the work will go over the pins if the center-to-center distance of the holes varies between 1.178 and 1.182 inches, if the holes are the smallest permissible size. If, however, they are the largest size allowable, as .451 inch, the work will go over the gauge pins if the center-to-center distance varies between 1.176 and 1.184 inches.

42. Having seen that reducing the diameter of the gauge pins results in an increase of the range of variation within which the work will pass over the gauge pins, we will now investigate how this range can be reduced.

The most obvious way is to reduce the limit of variation in the size of the holes. Suppose that the holes being nominally .450 inch in diameter, we place their limiting sizes at .4495 and .4505 inch. If the holes are small, say below 1 inch, there is not much difficulty in reaming them within this limit. Then, if the gauge pins are made .0005 inch below the smallest permissible size of hole, or .4495—.0005 = .449 inch, the work will go over the pins if the center-to-center distance of the holes in the work varies between the limits of 1.1785 and 1.1815 inches; that is, if it varies .0015 inch either way from the nominal center-to-center distance.

The limit of variation in the center-to-center distance of the holes that can be detected by a pin gauge can be further reduced by constructing one of the pins, preferably the fixed pin, in such a manner that it can be centrally expanded to fit the hole in the work. If this is done, the limit of variation in the center-to-center distance within which the work will go on the gauge will be reduced to one-half of that obtained otherwise.

43. A satisfactory way that may be suggested for gauging the center-to-center distance of holes is to make both pins adjustable to the size of the hole; one pin is then rigidly fixed and the other is mounted on a slide provided with a vernier that reads to zero when the center-to-center distance is correct. If the work is placed over the pins and both pins are then expanded to fit the holes, the amount that their center-to-center distance differs from the nominal distance is then read off directly by aid of the vernier. Such a gauge is rather expensive; the circumstances of each case must determine if the investment is advisable.

44. In Fig. 19 is shown a suggestion for a gauge intended to gauge the center-to-center distance *a* of holes

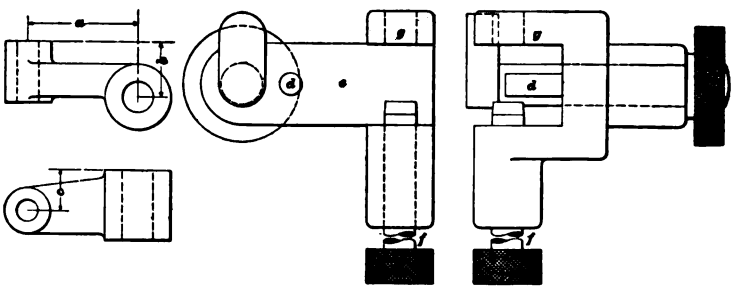

FIG. 19.

at a right angle to each other. At the same time, it is intended to gauge the distances *b* and *c* between the faces indicated and the axes or center lines of the holes. A gauge pin, as *d*, may be made to fit closely in the hole in the left-hand boss; this pin is inserted at a right angle to the surface *c*.

The movable gauge pin *f* fits the hole in the right-hand boss; it is placed with its center line parallel to the surface *e* and the distance *b* from it. Then, if the work is placed over the gauge pin *d* and then held or clamped with the clamping bolt shown against the surface *e*, while the upper surface of the right-hand boss is against the stop *g*, it will be seen that the gauge pin *f* cannot enter and pass through the hole of the right-hand boss unless the distances *a*, *b*, and *c* are correct.

INTEGRAL DIVISION OF CIRCLES AND LINES.

DIVISION OF THE CIRCLE.

45. The problem of dividing the circle into a given number of **integral divisions** is one that frequently presents itself to the toolmaker in one form or another. In one case, it may be the making of an original index plate, with holes equidistant from the center and each other and piercing the index plate at a right angle to its surface; in another case, it may be the spacing of notches equidistant around the periphery, or the similar problem of dividing the rim by lines or dots into equidistant divisions.

46. There are quite a number of ways in which a circle may be divided mechanically; some of these require the use of scientific apparatus not to be found in tool rooms, while others require nothing beyond the facilities ordinarily at the command of the toolmaker. Some of these latter methods are here explained; each one of them has actually been used and proved satisfactory when reasonable skill was displayed by the workman. The ultimate accuracy attainable by either one of the methods given largely depends on the skill and patience of the toolmaker; neither one of the methods given is here recommended as in general superior to the others. Hence, the choice of method must be governed by

the circumstances of each case, selecting that method which is best adapted to the nature of the job and the facilities at the command of the toolmaker.

DIVIDING BY MECHANICAL CORRECTION OF ERRORS.

47. In Fig. 20, one way of accurately dividing a jig or index plate into a given number of divisions is shown. This method was first made public by Mr. Wm. Baxter in the columns of the "American Machinist." While there is

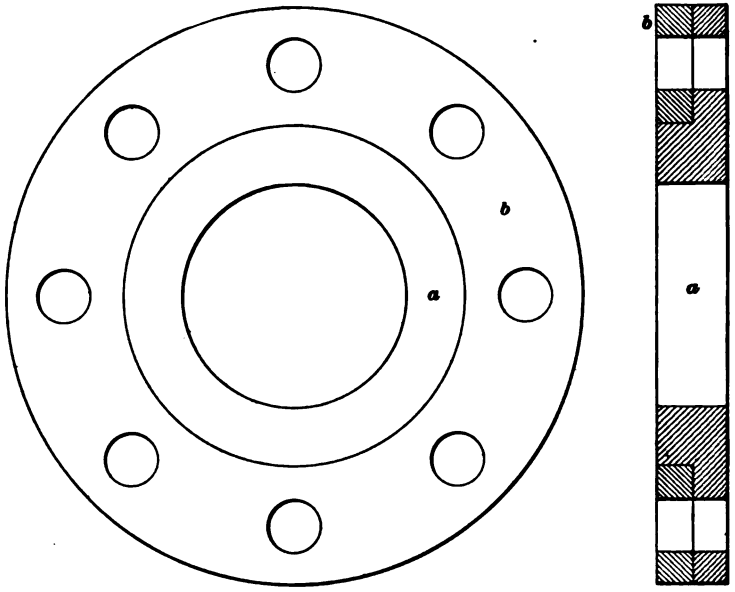

FIG. 20.

little doubt that by its use it is possible to space holes equidistant from the center and each other within an uncommonly small limit of error if sufficient patience is exercised, it cannot be claimed for it that it will also accurately locate the holes on a circle of a given predetermined diameter. Hence, if great accuracy in the diameter of the circle on which the holes are located is an essential condition, the method is not applicable.

48. In the illustration, let *a* be the jig that is to be pierced to receive hardened steel bushings. Make a ring *b* of the same material and approximately of the same thickness as the flange of *a*, fitting the inside of the ring carefully to the projecting rim of *a*. On the surface of the ring *b*, the centers are laid out as carefully as possible, spacing them with a pair of dividers on a scribed circle of the given diameter. The ring and jig is then clamped together and the holes are drilled through both. After the holes have been drilled, a taper reamer and two pins of exactly the same taper are needed. If the holes have been drilled with a ¼-inch drill, a reamer about 5 inches long on the cutting edge and tapering from a scant ¼ inch at the small end to about ⅜ inch at the large end, will usually be about right.

After drilling, if the ring *b* be shifted one hole, it will be found that the other holes do not match. To make them match, proceed as follows: Place the ring so that one pair of holes fairly matches and clamp jig and ring together. Ream out this pair of holes until the reamer cuts through *b* and just enters *a*. Drive one of the taper pins lightly into this hole. Ream out a hole opposite the first one and insert the other pin. These two pins prevent any shifting of the ring on the jig in the subsequent operations. Now, ream out all the holes, running the reamer in to the same depth in each one. If it should happen that two corresponding holes are so far out of line as to require the reamer to be run in deeper than in the first hole in order to cut all around the edge of the hole in the jig, ream out until this is accomplished and then go over the holes previously reamed and ream them out to the same size as the last hole. All holes having been reamed, take off the clamps and take out the taper pins; shift the ring *b* one hole ahead, match the holes, clamp the ring and jig together, ream out an opposite pair of corresponding holes, insert the pins, and reream all the holes. Shift one hole ahead again and continue this until all holes match in the ring and jig. If the holes have been located fairly accurate at first, it is rarely necessary to repeat the operation more than six or eight times to bring

them in line. If the holes should match before the reamer has cut all the way through the jig, the operation of shifting one hole ahead and rereaming should be continued until it does.

It is not advisable to run the reamer all the way through in one position of the ring and jig, even though the holes match perfectly; it is much better to remove only a little metal from each hole and then shift the ring again. If it is desired that the holes should be cylindrical instead of conical, the large end of the taper reamer may be made parallel beyond the taper and then run through all the way, removing only a small amount of metal from each hole and then shifting again. This job may be done most conveniently in a drill press. When finished, both ring and jig will be duplicates of each other and both will be correct; the ring may afterwards be used as an original index plate, or may be converted into a duplicate jig. The accuracy that may be obtained by this method is believed to be greater with a relatively thin ring and jig than with thicker ones, and depends more on patience than on skill.

DIVIDING BY CONTACT MEASUREMENTS.

49. Another method that differs considerably from the previous one is shown in Fig. 21. By this method, holes can be located very closely within a given distance from the center; it is believed that after holes bored by this method are corrected again by that shown in Fig. 20, the holes can be spaced within a practically insensible amount of error and thus perhaps the closest approximation to true spacing that is possible by purely mechanical means may be obtained. In the illustration, let *a* be the work that is to be pierced by holes perpendicular to its surface. Let *a'* be a projection intended to center the jig on the work. Then, a circle of approximately correct diameter having been scribed centrally on *a*, divide this circle with dividers into the required number of divisions, and drill and tap at the points of division for a small machine screw of convenient size. Make a

number of steel bushings or buttons having an inside diameter about $\frac{1}{8}$ inch larger than the diameter of the machine screw and an outside diameter of any convenient size. Assemble

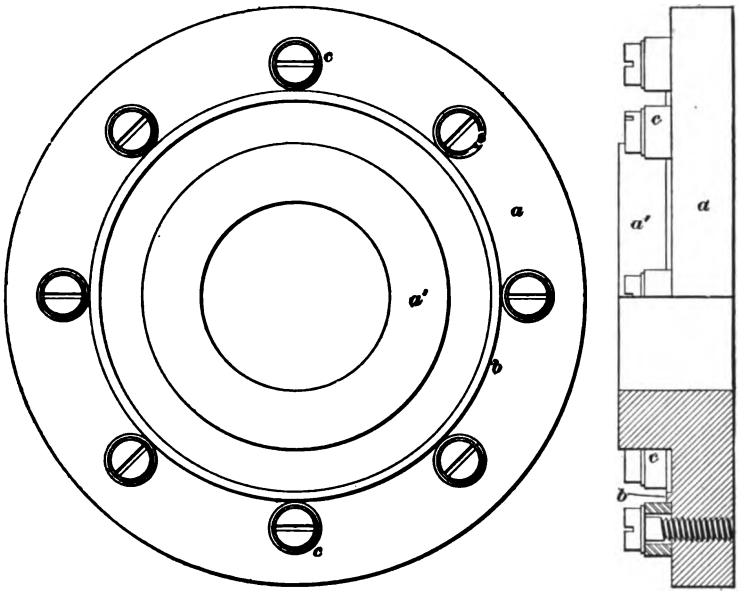

FIG. 21.

these bushings on a long arbor and grind them truly round and to the same diameter. Finish the outside by lapping carefully to insure that all bushings are the same diameter. As far as the diameter is concerned, it need not be any accurate size; the only thing essential is that all bushings have the same diameter.

The height of the bushings is immaterial; it is necessary, however, that the top and bottom surfaces of each bushing shall be parallel and in planes at a right angle to the axis of the bushing. The inside of the bushings does not need to be finished to any extent. The bushings having been made, caliper their size with a micrometer. Subtract this diameter from the diameter of the circle on which the holes are to be located; the remainder will be the outside diameter of a narrow ledge, as *b*, that is turned centrally with *a'*. Evidently,

if the buttons are in contact with the ledge, their distance from the center of the button to the center of the jig will be equal. Fasten the buttons *c*, *c* by means of machine screws, placing a smooth washer that has parallel sides between the head of the screw and each button. Then, each button being in contact with the ledge *b*, adjust buttons about 90° apart until, by calipering over their cylindrical surface, they are shown to be spaced equidistant. Then, adjust the buttons located between those just adjusted until calipering shows all the buttons to be equidistant.

After each adjustment is made, tighten the screws sufficiently to prevent any accidental shifting of the button. The buttons being properly located, mount the jig on a true running face plate and true it until one of the buttons runs true, as shown by a sensitive indicator. Remove this button and bore the hole carefully. In the same manner, bore all the other holes.

In this method, the errors that preclude absolute accuracy are chiefly the error made in locating the buttons and the error in truing up by them. However, with careful workmanship and a fairly sensitive sense of touch, a remarkable degree of accuracy can be obtained; if the spacing is to be still more accurate, follow by the method shown in connection with Fig. 20.

DIVIDING BY CHORD MEASUREMENTS.

50. Fig. 22 shows a method of originating an accurate index plate that was devised and successfully used by the writer. While, for practical reasons, it is limited in its application, there are undoubtedly many jobs on which this method can be used with good results, as far as accuracy and low first cost are concerned. As shown in the figure, there are a number of bars, as *a*, *a*, connected together at their ends by concentric hardened steel bushings *b*, *b*, fitting closely in the holes in the bars. A cylindrical projection on the work is carefully turned down centrally with the axis of the plate until it fits the inside of the bars closely. Then,

if all bars have the same center-to-center distance between their holes, and if the holes in each bar occupy the same relative position in regard to the inside surface of the bars, holes drilled and reamed through the connecting bushings after clamping the device to the work must be equidistant from each other and equidistant from the center of the work. The degree of accuracy attainable by this device, as

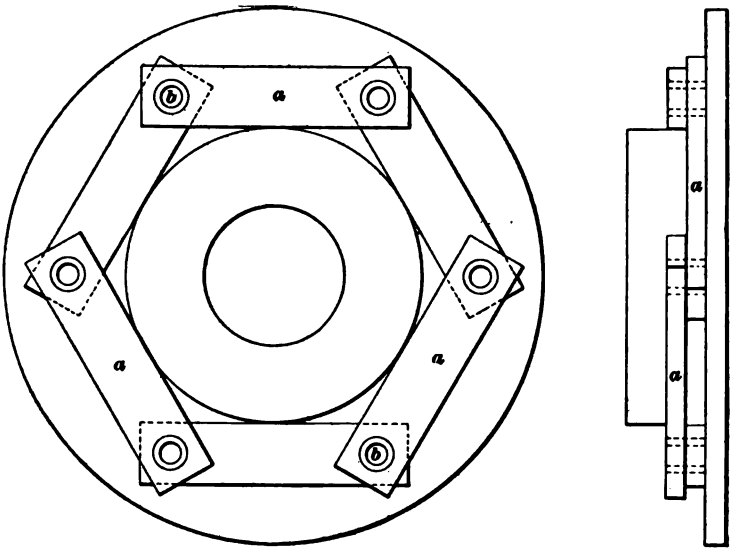

FIG. 22.

far as the division of the circle is concerned, depends on the limit of variation within which the bars can be made alike in their essential dimensions.

A temporary jig may be constructed for the bars; after drilling the holes in all the bars, use a rose reamer that fits very closely into the bushings of the jig and run it through while flooded with oil. The difference in the center-to-center distance of the various bars may thus be well kept within a limit of .0001 inch, and if the work is done at all carefully, this limit of variation need not be exceeded in the relative positions of the holes in respect to the edge intended to bear against the cylindrical central projection of the work. The

limit of accuracy within which the holes can be located on a circle of a given diameter is dependent primarily on the degree of accuracy within which the center-to-center distance of the holes in the bars agrees with the calculated distance. A straight line drawn between the centers of the holes of each bar is the chord of a circle. By geometry, the chord of a circle is equal to twice the sine of half the angle included between the lines drawn from the center of the circle to the extremities of the chord. Then, to find the center-to-center distance of the holes in the bars required in order that the centers will lay on a circle of a given diameter:

Rule.—*Divide 360 by twice the number of divisions into which the circle is to be divided. From a table of natural sines, take the sine corresponding to this angle and multiply it by the diameter of the circle.*

To prevent any mistake in assembling, it is well to finish only one side and edge of the bars by planing. Then, insert all bars the same way in the jig, with the planed edge against the stops and the planed side down; finally assemble with the planed edge inside and the planed side down. The sides of the bars should be fairly parallel; the finished edge of each bar should be scraped to a straight edge.

DIVIDING BY ASSEMBLY OF EQUAL PIECES.

51. While most index plates are provided with correctly spaced holes that receive an axially movable index pin, it may also be made with notches or similar spaces that receive a latch of suitable form. Such an index plate is shown in Fig. 23. It was first employed in connection with some part of the Thorne type-setting machine, where a great accuracy of division was required. As shown in the figure, the circle is subdivided into exactly equal divisions by placing circular disks, equal in number to the number of divisions required, in contact with one another and also in contact with a central circular projection on the index plate. The

index latch pin is then made to suit the approximately triangular space between adjacent disks.

To make an index plate in this manner, make the disks truly circular and of exactly the same diameter by mounting as many as possible, preferably the whole lot if circumstances permit, on an arbor; grind them true and then finish

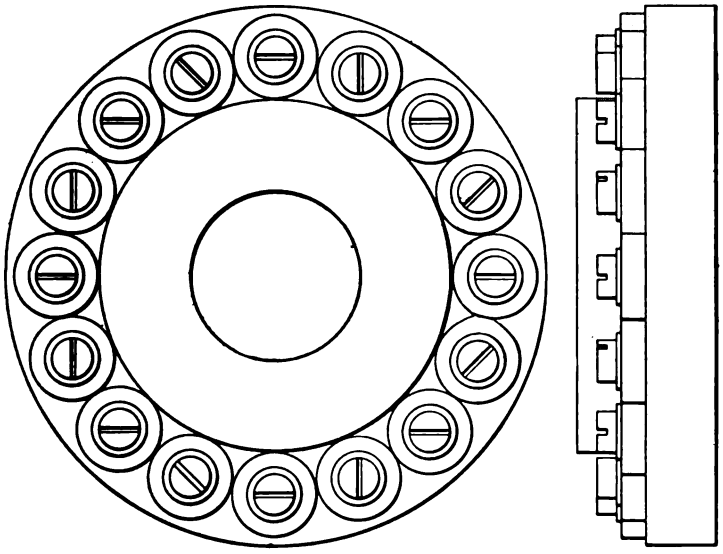

FIG. 23.

by lapping as if it were a plug gauge. The screw holes having been drilled and tapped in the body of the plate, by careful grinding reduce the diameter of the central projection until all disks will touch the projection and one another. If great accuracy is required, the central projection must be ground while the index plate is in its proper place. This will then insure that it is central with the axis around which it rotates. Great care is required not to grind the projection too small; it should be remembered that any reduction in its diameter means that the circumference is shortened more than three times that amount.

DIVIDING BY CORRECTING THE ACCUMULATED ERROR.

52. Fig. 24 illustrates a method of dividing a circle that differs entirely from any of those previously shown. This

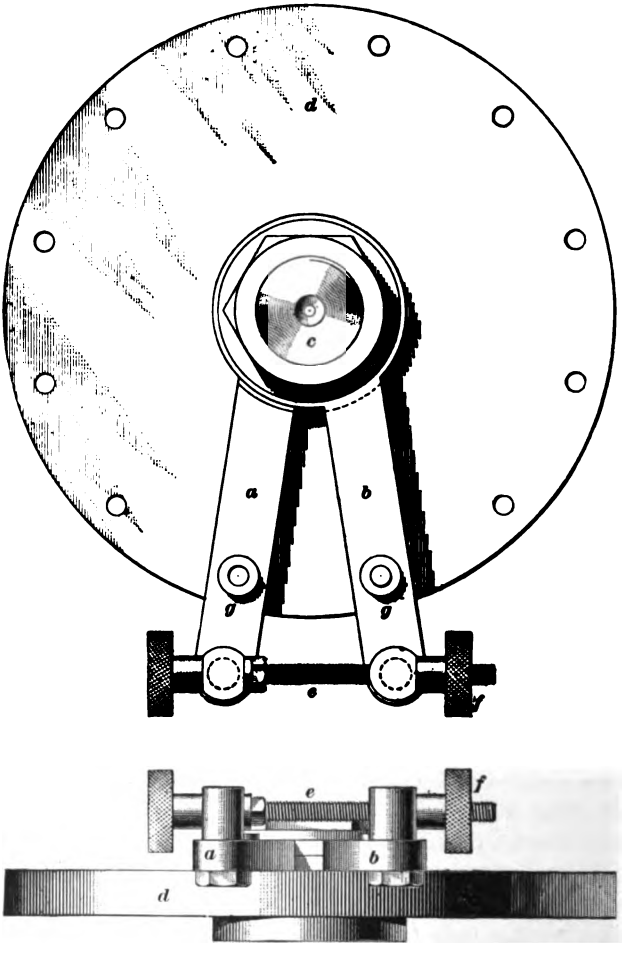

FIG. 24.

method is based on the principle that when successive equal measurements are made, the final error will be the product

of the error of each individual measurement and the number of measurements. Referring to Fig. 24, *a* and *b* are two movable arms free to rotate about a central cylindrical plug *c*, which is closely fitted to a central hole in the work *d*. The angular distance between the arms is adjustable by means of the screw *e*, made with a very fine pitch of thread. A locknut *f* placed on the screw *e* prevents any motion of the arms after adjustment. Each arm is pierced with a hole that receives hardened steel bushings *g*, *g*; these bushings must be exactly the same distance from the center of rotation of the arms, and, at the same time, their distance from the center must be equal to the radius of the circle on which the holes in the work are to be located. The bushings are made a nice fit in the arms; the hole through the bushings must be exactly concentric with their outside.

To use this device, the center-to-center distance between the holes is first calculated by the rule given in Art. **50**; plugs are then inserted in the bushing holes, and, by measuring over them or between them with a vernier caliper or micrometer, the center-to-center distance of the holes in the arms is adjusted by means of the screw *e* to coincide as closely as circumstances permit with the calculated distance. The bushings are then inserted and one hole is drilled and reamed through the work. A closely fitting plug is pushed through the bushing into the hole just reamed and the second hole is drilled and reamed. The plug is now withdrawn and the device shifted until the plug can be inserted into the last hole. Another hole is now put through the work and this operation is continued until all holes have been drilled. It will now be usually found that the center-to-center distance between the last hole and the hole first drilled differs from the center-to-center distance of the other holes. If it is less, it shows that the arms are too far apart; if it is more, they are too close together. Readjust the arms, remembering that the error has been multiplied; substitute new bushings with a larger hole and reream all the holes. Continue until the center-to-center distance between the first and the last hole is equal to that of all the other holes.

53. The device shown may be varied to suit circumstances. Thus, it may readily be adapted for drilling radial holes equally spaced around the periphery; or it may be used for graduating the face or the periphery, substituting a slide carrying a marking point for the bushing in one arm and placing a microscope with cross-hairs in the place of the other bushing. In that case, a suitable clamping device must, of course, be added. Knowing the principles involved, numerous modifications will suggest themselves upon reflection.

DIVISION OF LINES.

MECHANICAL DIVISION.

54. The most familiar and most common form in which this problem presents itself to the toolmaker is the equidistant spacing of holes that are located on a straight line. One way of locating the holes is by means of steel buttons

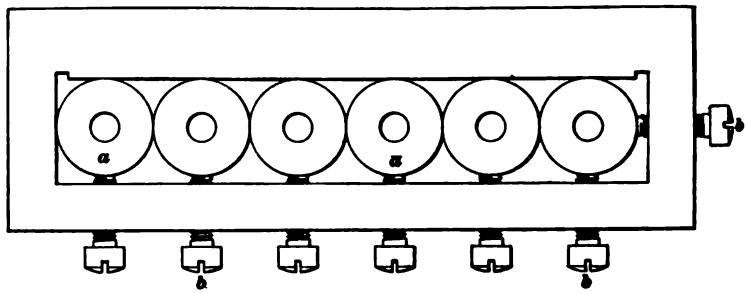

FIG. 25.

located in a straight line by being brought in contact with a straightedge and placed at the correct center-to-center distance by contact measurements. Another method that will produce very accurate results and is applicable to a great many different jobs is shown in Fig. 25. A number of hardened steel disks, as *a*, *a*, equal in diameter to the center-to-center distance of the holes, are put into a frame and held in contact with one another and with one side of the frame that forms a straightedge by means of the

setscrews *b*, *b*. Evidently, if the disks are pierced by holes central with their outside, and if holes are drilled and reamed through these disks, these holes will be equidistant and on a straight line.

The accuracy in spacing attainable depends primarily on the accuracy in diameter of the disks and the concentricity of the holes in them, while the accuracy within which the holes lie in a straight line depends on the stiffness and on the accuracy with which the straightedge of the frame is formed. The error in the center-to-center distance of the end holes is evidently the product of the error in diameter of a single disk and the number of disks. With proper facilities, there should be little trouble in making the diameter of the disks equal within an insensible amount of variation; and as the diameter need not vary more than .0001 inch from the true diameter, and while it is feasible to make the holes in the disks concentric with the outside within a negligible amount of variation, it follows that the total error between the end holes should be very small indeed.

When a rather large number of holes are required, this device may be made to include, say, six holes and then be shifted forwards, being centered by a pin passing through the first disk into the last hole. If this is adopted, the whole device must be shifted along a straightedge of sufficient length; the outside of the frame must then be finished parallel to the line passing through the centers of the disks.

55. Another method of mechanically spacing holes in work is to locate the first hole by means of a center-punch mark or a steel button, the work being mounted on the face plate of a lathe. A straightedge is then clamped to the face plate in contact with one side of the work. After the first hole is finished, a vernier depth gauge or a special micrometer head is clamped opposite the end of the work and the distance to the work measured. The clamps on the work are then loosened and the piece shifted the proper distance along the straightedge, the distance being measured by the vernier or micrometer. The work is again

clamped and the second hole finished. Fig. 26 shows a handy form of special micrometer that may be used for such work.

FIG. 26.

Holes in work can also be spaced by mounting the work on the table of a milling machine and obtaining the spacing, either vertical or horizontal, by means of the graduated dials on the feed-screws.

DIVIDING BY CORRECTING THE ACCUMULATED ERROR.

56. Fig. 27 shows a modification of the method explained in connection with Fig. 24 for dividing a circle. In this case, the problem is to subdivide the distance between two holes into an equal number of divisions. The movable arms of Fig. 24 are here replaced by a block with movable slides *a* and *b*, which carry the bushings. In its simplest form, the device is without any adjusting screws; for refined

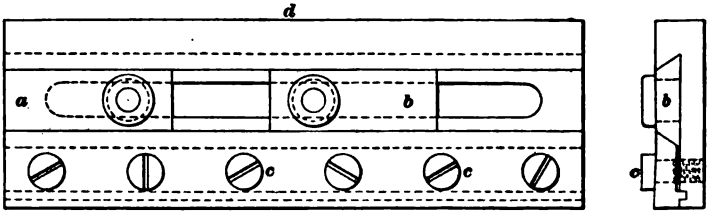

FIG. 27.

work, these screws are needed, and they may be applied either to one or to both slides, as desired. By tightening the screws *c*, *c*, the slides and block are locked together without disturbing the center-to-center distance of the bushings. The device must be used in conjunction with a straightedge if the holes are to be on a straight line, or a curved guide of suitable curvature if the holes lie on a circular

arc. The side *d* is intended to slide along the straightedge or the curved guide and must be made to suit.

Suppose that the distance between two holes is to be subdivided by a number of equally spaced holes that are required to lie on a straight line. A straightedge of sufficient length is clamped to the work in such a position that when the device is in contact with the straightedge, a closely fitting plug will pass through the bushings into both holes when shifted from one to the other. The slides are then set about the required distance apart and locked. A plug is pushed through one bushing into the hole in the work and a hole is drilled and reamed through the other bushing. The device is then shifted along and the other holes are put through the work.

When the last hole has been reamed, the distance between it and the end hole is most likely to differ somewhat from the center-to-center distance between the bushings. The difference is then split in accordance with the direction in which observation showed the center-to-center distance to vary and the operation of reaming is repeated. This process is repeated until plugs passing through both bushings will enter the end hole and the one adjoining it. When making a device as shown in Fig. 27, it is to be observed that it is essential to have the centers of both bushings at the same distance from the edge *d* when it is required that the holes in the work shall be in a straight line.

TOOLMAKING.

(PART 5.)

DIEMAKING.

CUTTING DIES.

CLASSIFICATION AND NOMENCLATURE.

1. **Dies** that are intended for cutting materials in the punching press are generally divided into three distinct classes, which are: **plain dies, gang dies,** and **compound dies.**

The term *die* is usually applied collectively to the die block and punch; the **die block** is that part of the die which contains a hole of the same outline as that of the piece to be punched, while the **punch** is the block that fits into the hole of the die block.

2. The die block is made up of four distinct essential parts, which are: the hardened and tempered **block** *a*, Fig. 1, which does the cutting; the **stripper plate** *b*, which strips the stock from the punch; the **guide strip** *c*, which guides the stock; and the **gauge pin** *d*, which gauges the location of the holes punched in the stock. By *stock* is here meant the material to be punched, which in most cases comes in

Copyright, 1901, by THE COLLIERY ENGINEER COMPANY.
Entered at Stationers' Hall, London.
All rights reserved.

long parallel strips, and is gradually fed along by hand or automatically.

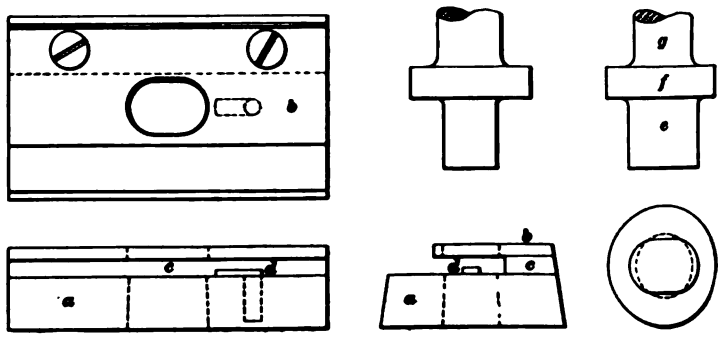

FIG. 1.

3. The punch consists of not less than three essential parts, which are: the **punching block** *e*, which does the cutting; the **collar** *f*, which takes the thrust; and the **shank** *g*, by means of which the punch is attached to the ram of the press. These three parts may be one piece, as shown, or they may be separate pieces united by suitable means to form the punch.

PLAIN DIE.

4. The term **plain die** is commonly applied to a die intended to punch a given shape in one continuous cutting operation from flat material, which may be either stock or a punching obtained by a preceding operation. It may be intended to pierce a hole of a given shape through the material, in which case the punching is the waste material, or *scrap*, as it is commonly termed, or it may be that the punching is the article desired, in which case the remainder of the stock is the scrap.

5. Self-Centering Die. — Dies intended chiefly for producing holes do not always need a gauge pin; in many cases, the material in which the holes are to be punched is

center-punched at the point where the hole is to be located; the punch may then be provided with a small conical point, as *a* in Fig. 2, which enters the center-punch mark and thus centers the work. When holes are to be punched equidistant, in many cases a gauge pin will be found of great advantage, inasmuch as by it the laying out of the holes on the work can be avoided. The conditions that exist in each case will readily determine whether a gauge pin can advantageously be used or not.

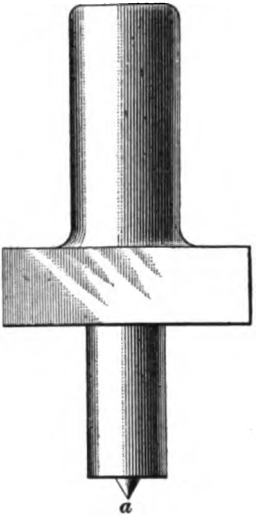

FIG. 2.

6. Multiple Die.—A plain die may often be provided advantageously with several similar openings in the die block, and have a number of punching blocks fitted to one punch, thus punching several pieces in one operation. When this construction is deemed advisable, the openings must be spaced far enough apart to leave sufficient material between any two punched holes in the stock to allow it to be passed through a second time, when the material left between the holes is punched out. The object of this is simply to leave sufficient steel between the openings in the die block to support the cutting edges.

7. When the piece to be punched is of such shape that cutting is to be done within the space enclosed by the bounding edges of the punching, it may be done in a second plain die, thus accomplishing the required punching in two separate operations.

8. Gauge Die.—The die for the second operation may be arranged as shown in Fig. 3. In the illustration, the punching, or **blank,** as it is often termed, turned out by

the first operation is shown at (*a*); this is to be pierced by the holes *a* and *a'*, see Fig. 3 (*b*). The die block is pierced with properly located holes of correct diameter and the punch is provided with two punching blocks, as *b* and *b'*. The sectional view of the die block is taken on the line *A B*. The guide strip and gauge pin of the first plain die are here replaced by a **gauge plate** *c* attached to the die block. This gauge plate is fastened in such a position that it will properly locate the blank in relation to the holes in the die block.

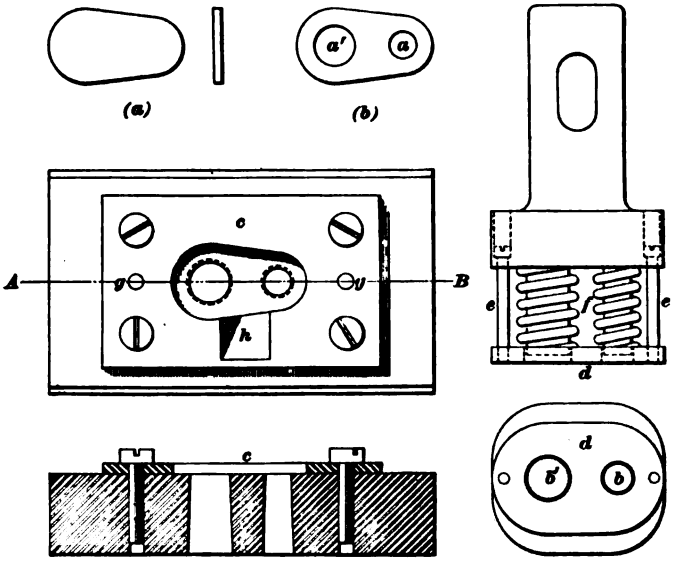

FIG. 8.

The gauge plate has an opening of the same shape as the blank, but sufficiently larger to allow it to be freely inserted. Reflection will show that if a stripper plate is attached to the die block, it will not only be difficult to insert the blank in the gauge plate, but it will also be difficult to remove it. Besides, it is then almost impossible to clean out the opening in the gauge plate. To overcome these objections, the stripper plate may be fitted to the punch. Referring to

Fig. 3, the stripper plate *d* is attached to the punch by means of two screws *c*, *c*, which permit the plate to move axially. Heavy coiled springs *f* hold the stripper plate in its lowest position, which is so governed by the length of the screws that the lower surface of the stripper plate projects slightly beyond the faces of the punching blocks *b* and *b'*.

Imagine the die to be in place and that a blank is placed in the opening of the gauge plate. Then, if the punch descends, the stripper plate comes in contact with the blank and remains stationary. As the punch continues to descend, the coiled springs are compressed; the punching blocks pass through the blank, and, finally, when the punch returns, the springs, by acting on the stripper plate, strip the blank from the punching blocks.

9. In order that the gauge plate may not shift, it is doweled to the die block by means of the dowel pins *g*, *g*, and is held down by flat-headed or fillister-headed screws. To allow the blank to be readily removed from the gauge plate, a part of the circumference of the opening may be beveled, as shown at *h*. A wedge can then be used for prying the blank out. For rapid work, it may be advisable to design some lever arrangement, operated by some moving part of the press, that will automatically throw the blank out of the gauge plate after punching. The gauge plate is often made so that it encircles about one-half of the blank, which is then pushed against the gauge and after punching can be removed by slipping it out. This arrangement is somewhat objectionable on account of the liability of the blank moving slightly away from the gauge before the punch strikes it.

10. By using a second die fitted with a gauge plate for punching the holes within the blank, these holes can be located very closely, so that all punchings will be very nearly duplicates. However, since this requires a second operation, the time cost per punching will be more than double what it would be if the blank and the holes could be produced in one operation.

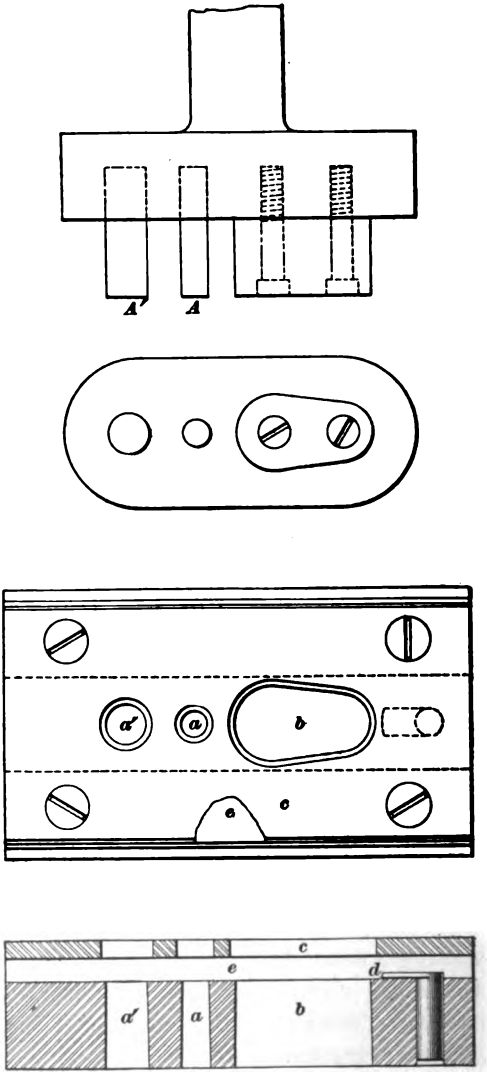

FIG. 4.

GANG DIE.

11. The **gang die** is intended to remedy the defect of excessive time cost; some designs of gang dies are open to the objection that, while they accomplish their primary object, they cannot be relied on to produce duplicate work, since they depend largely on the straightness of the stock and the skill of the press operator to produce good work.

12. Plain Gang Die.—The most common design of a gang die is shown in Fig. 4; the die shown is laid out to punch the same piece that is shown in Fig. 3 (*b*). For this purpose, the die block contains three holes; *a* and *a'* are the holes that receive the punching blocks for punching the holes within the blank, and *b* is the hole for punching the blank itself. The stripper plate is shown at *c* and the gauge pin at *d*. Two guide strips *e*, *e* guide the stock between them.

13. When starting a strip of stock, it is inserted below the stripper and pushed in until its end rests against the gauge pin *d*. The punch then cuts out one blank without holes in it, and this blank is thrown away. The punching blocks *A* and *A'* at the same time punch the holes *a* and *a'*. The stock is then pushed along until the left-hand edge of the large punched hole in the stock comes against the gauge pin. The holes *a* and *a'* in the stock are now in their correct positions above the opening *b* in the die block; as the punch descends, it cuts out a finished punching at *b*, and at the same time cuts a new pair of holes *a* and *a'* through the stock. Now, assuming that the die is correctly laid out and the gauge pin correctly located, it is readily seen that if the operator fails to push the stock against the gauge pin, the holes will not be correctly located in the blank. Hence, although when in skilled hands, this design of a gang die will produce fairly accurate work, it cannot be relied on to make exact duplicate pieces. Whether this consideration is of sufficient moment to prevent the use of the design just given must be decided upon the merits of each case.

14. In the design shown, there are two guide strips, placed the required distance apart. Two guides are employed, in order to insure that the stock is fed in properly; two guides can only be used, however, when the stock is uniform in width, and straight. When the stock is not of

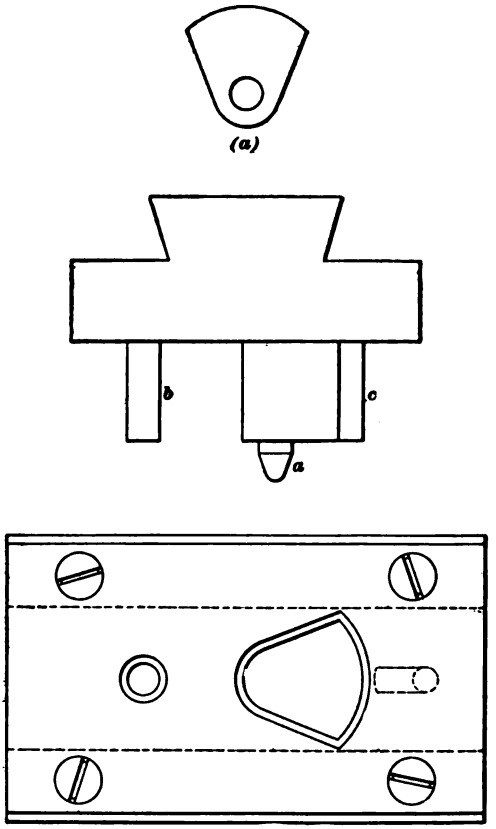

FIG. 5.

uniform width, or somewhat crooked, one guide strip is all that can be used; the operator in feeding the stock must then always push it against and along the guide strip. Should he fail to do this every time, the holes will be improperly located within some of the punchings.

15. Self-Centering Gang Die.—Fig. 5 shows a design for a gang die that is intended to overcome, to a large extent, the defects of the ordinary gang die. Referring to the figure, the piece to be punched is shown at (*a*). In order that the stock may be properly centered in case the operator should fail to push it against the gauge pin, the punch is provided with a centering pin *a*, which is beveled, as shown. The upper cylindrical part of the pin is made an easy fit in the circular hole that is punched in the stock by the punching block *b*. The centering pin is located on the punching block *c* so that its center line coincides with the center of the hole in the punching.

16. This style of a gang die will produce duplicate work within quite a small limit of variation. Evidently, the centering pin must be a loose fit in the hole within the punching, so that the latter will not stick to the punch. Then, the limit of variation within which the hole will be located inside of the punching is equal to the difference in the diameters of the centering pin and the hole. The punch shown is open to one objection, however. Should the punch come down when the stock is not in such a position that the centering pin is fairly over a hole, it is pretty sure to be broken. This objection, if circumstances permit it, may be overcome by making the centering pin movable in an axial direction and providing a helical spring that will be compressed by the receding of the pin in case it strikes solid stock.

COMPOUND DIE.

17. When punchings that are pierced by holes are required to be exact duplicates of one another, a so-called compound die must be used. The compound die differs from the plain die and the gang die in that each half of the die has a die block, a punching block, and a stripper plate. The compound die does not depend in any way on the skill of the operator, and will make all punchings exactly alike, as will be apparent when its construction is studied.

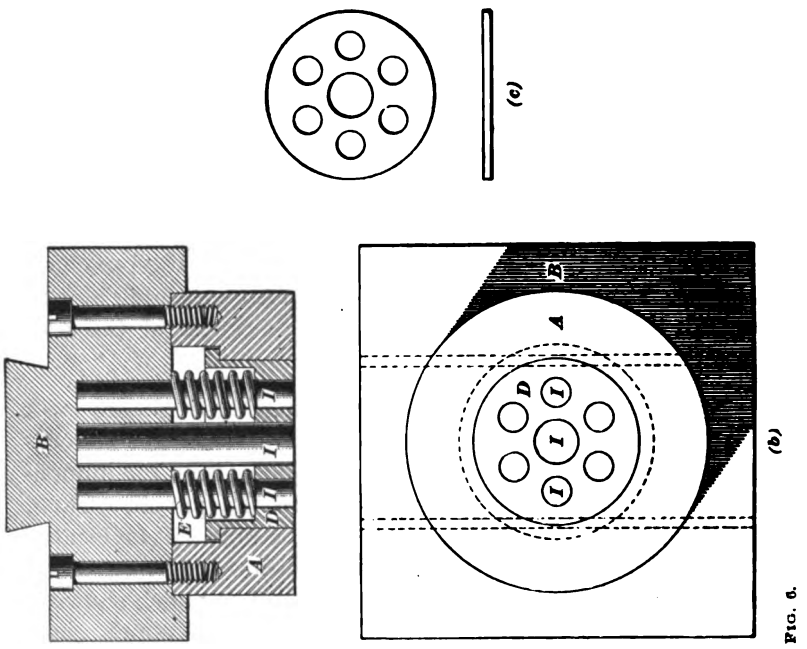

FIG. 6.

18. An approved design for a compound die is shown in Fig. 6. In Fig. 6 (*a*) a sectional elevation and a plan view of the lower part of the die are given; Fig. 6 (*b*) shows a sectional elevation and a bottom view of the upper part of the die; while Fig. 6 (*c*) shows the complete punching, which is accomplished in one operation. Referring to Fig. 6 (*a*), the tool-steel block *a* is at one and the same time a die block and a punching block. It is fitted to a recess cut into the base plate *b* and is attached to it by means of the screws shown. The block *a* is surrounded by the axially movable stripper plate *c*, which is confined as to its uppermost position by the heads of the screws *d*, *d*, which engage a shoulder within the base. The stripper plate is held up by heavy helical springs *e*, *e*. The guide strip *f* and gauge pin *g* are fastened to the stripper plate.

The upper part of the die differs from the lower in that the die block *A* and the punching blocks *I*, *I* are separate. All are rigidly fastened to the head-block *B*, which fits the ram head of the press. The stripper plate *D* fits in the die block and surrounds the punching blocks; it is axially movable, being confined as to its lowest position by a shoulder on the die block and held down by helical springs *E*, which in this particular case surround the punching blocks. The outside of the block *a*, Fig. 6 (*a*), fits the inside of the die block *A*, Fig. 6 (*b*); the punching blocks *I* fit the holes in *a*.

19. The operation is as follows: The stock having been placed against the guide and the gauge pin, the upper die in descending first depresses the lower stripper plate until the stock touches the upper surface of the block *a*. As the upper die continues to descend, it punches out the circumference of the punching and the inside holes at the same time; the punching passes into the upper die, pushing the stripper plate *D* upwards. When the upper die moves upwards again, the lower stripper plate *c*, under the influence of its springs, strips the stock from the block *a*; at the same time, the upper stripper plate *D* ejects the punching from

the upper die. The scrap punched from within the punching discharges down through the holes in the lower die block, which are given clearance to facilitate it. No clearance is given to the hole within the upper die block.

20. A compound die, by reason of its construction, will produce the most accurate work ; at the same time, it is the most expensive die as far as first cost is concerned. Hence, if accuracy is not a paramount consideration, a gang die may be used advantageously; if accuracy is absolutely essential, use a compound die. A compound die is believed to have been first designed by Mr. A. L. Denison, of Waltham, Massachusetts.

LAYING OUT DIES.

21. Economy in the Use of Stock.—Before a die is laid out, i. e., before the outline of the hole and the exact location of the gauge pin can be marked on the surface of the die block, the toolmaker must determine which is the most economical way of punching the stock. Then, he must so lay out the die that the greatest number of punchings can be obtained from a given weight of stock, in order to reduce the waste to its lowest value. This is a matter that requires a great deal of judgment; diemakers have found it a good plan to cut a few pieces of paper to the required outline of the punching, then, by arranging them in different ways, they can usually determine quite rapidly the most economical way of punching the stock.

22. A case illustrating right and wrong ways of punching stock is shown in Fig. 7. In the figure, *a* represents the stock and *b*, *b* the holes remaining after the punching has been done. Referring to Fig. 7 (*a*), the strip of stock is seen to have passed but once through the press, leaving an enormous amount of waste. In Fig. 7 (*b*), the gauge pin was so located that there was sufficient stock left between each pair of holes, after passing the strip entirely through the press, to allow it to be reversed and passed through once

marked at a distance from the outline of the hole sufficient leave ample support to the cutting edges. The distance tween the opening and the gauge pin against which the ck is pushed is readily determined from the paper models l on the stock. Measure, on a line parallel to the edge of stock, the distance between corresponding points of the ne of those two nearest models that occupy the same on in relation to the edge. This is the distance that d of the gauge pin must be from a point of the open- the die block that lies on a line parallel to the guide d passes through the gauge pin, and on the side of ing farthest from the gauge pin. This distance en marked on the die, the laying-out process is

ying Out a Gang Die.—When laying out a ust be remembered that the holes first punched, located afterwards within the outline of the be located in such a relation to the guiding uge pin that they will occupy their correct stock is against the end of the gauge pin. larly difficult matter if a rational method ted.

l *C* in Fig. 9 (*a*) be paper models of the e been pasted on a piece of stock in t is believed the most economical use n, draw any line, as *a a'*, through the e edge of the stock. The distance points of intersection on models ative positions, as between *c* and *d*, is rresponding points must be apart on outline of the hole within the punch- ay be laid out as follows: On the y out the line of the punching ation to guide strip that the n to the of the ck. If a y be laid on surface the out- cribing around through

left after punching, it can be seen that by using stock wide enough to punch staggered holes, as in Fig. 8 (*b*), less material will be required for a given number of punchings than is needed when using a narrow strip, as in Fig. 8 (*a*). By measuring the width, it will be seen that the wide stock is not twice as wide as the narrow stock, although it will practically give twice the number of punchings for equal lengths of strips. Paper or sheet-tin models having the required outline can also be used advantageously for finding the best width of stock.

24. Position of the Gauge Pin. — The part of the gauge pin that forms the stop for the stock determines by its position the amount of stock that remains between the punched holes. This amount at the narrowest point between adjacent holes should, in general, never be less than the thickness of the stock, and may be slightly more for very thin material. It should not be forgotten that the punch in passing through the stock tends to draw, and actually does draw, some of the surrounding material toward its cutting edges; if there is too little stock around its periphery, it is liable to draw it inwards into the die block, which is likely to either jam or break the punch and die, or, at the best, make a ragged punching.

25. Laying Out a Plain Die.—To lay out the die block of a plain die, the upper surface is finished smooth by filing or grinding, and then coppered by using a solution of 1 part of blue stone (sulphate of copper) and 10 parts of water. Have the surface absolutely free from grease, and cover it lightly with the solution. In a few minutes, the solution will have dried; a very thin film of copper will now be found deposited on the surface, and will adhere quite firmly to it. The object of coppering is to make fine lines that are scribed, after coppering, more visible by the contrast in color between the steel and the copper. The outline of the hole is now laid out by scribed lines in the same position in relation to the guide strip that it is to occupy in relation to the edge of the stock. A center for the gauge pin is then

marked at a distance from the outline of the hole sufficient to leave ample support to the cutting edges. The distance between the opening and the gauge pin against which the stock is pushed is readily determined from the paper models laid on the stock. Measure, on a line parallel to the edge of the stock, the distance between corresponding points of the outline of those two nearest models that occupy the same position in relation to the edge. This is the distance that the end of the gauge pin must be from a point of the opening in the die block that lies on a line parallel to the guide strip and passes through the gauge pin, and on the side of the opening farthest from the gauge pin. This distance having been marked on the die, the laying-out process is complete.

26. Laying Out a Gang Die.—When laying out a gang die, it must be remembered that the holes first punched, which are to be located afterwards within the outline of the punching, must be located in such a relation to the guiding strip and the gauge pin that they will occupy their correct positions when the stock is against the end of the gauge pin. This is not a particularly difficult matter if a rational method of procedure is adopted.

27. Let *A*, *B*, and *C* in Fig. 9 (*a*) be paper models of the given outline that have been pasted on a piece of stock in the position in which it is believed the most economical use can be made of it. Then, draw any line, as *a a'*, through the models, and parallel to the edge of the stock. The distance between corresponding points of intersection on models occupying the same relative positions, as between *c* and *d*, is the distance that any corresponding points must be apart on the die block. When the outline of the hole within the punching is circular, the die may be laid out as follows: On the surface of the die block, lay out the outline of the punching in the same position in relation to the guide strip that the model occupies in relation to the edge of the stock. If a model is given, this may be laid on the surface and the outline transferred by scribing around it. Also scribe through

the hole within the model, and then, on the surface of the die block, mark its center by a fine center-punch mark. If

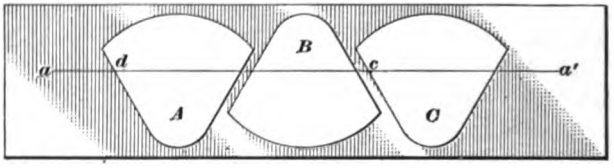

(a)

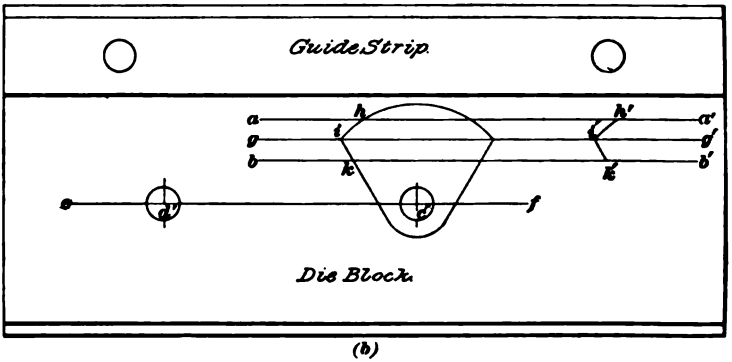

(b)

FIG. 9.

no model has been given, the outline and positions of the holes within the punching must be transferred from the drawing.

Next, through the center-punch mark just made, as c' in Fig. 9 (*b*), draw a straight line, as $e\,f$, parallel to the guide strip. On this line, lay off the distance $c'\,d'$ equal to $c\,d$ of Fig. 9 (*a*); the point d' will then be the center of the hole. By extending this method of laying out, the correct location of any point on the end of the gauge pin may be determined. If possible, the gauge pin should be so located that the act of pushing the stock against it will also force it against the guide strip. Suppose that it has been determined to locate the gauge pin within the space included by the lines $a\,a'$ and $b\,b'$; then draw the lines $a\,a'$, $g\,g'$, and $b\,b'$ parallel to the guide strip. From the points where these lines intersect the outline, and farthest away from the proposed location

of the gauge pin, as *h*, *i*, and *k*, set off on them the distances *h h'*, *i i'*, and *k k'* equal to *c d*. The points *h'*, *i'*, and *k'* are then points on the face of the gauge pin. It is not necessary to draw just three lines for the purpose of locating the gauge pin; any convenient number of lines from one up may be used.

28. A mechanical way of laying out the holes of a gang die involves the use of a model and a templet. Both of these may be made advantageously of a piece of medium heavy sheet tin; if this is not available, thin sheet steel or sheet brass may be used.

Cut off a strip of the same width as the stock, and cut a hole in it to exactly fit the outline of the model that has

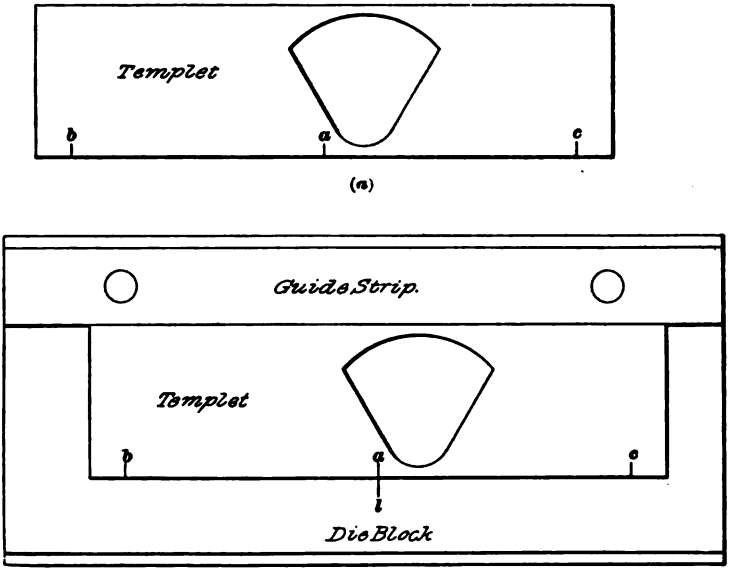

FIG. 10.

previously been made. Cut the hole in the same position relative to one edge that the punched holes are to occupy relative to the edge of the stock. On this templet, in any convenient place on the edge, make a mark, as *a* in Fig. 10 (*a*);

then, to the right and left of it, lay off the distances *a b* and *a c* equal to *c d* of Fig. 9 (*a*). Now place the templet on the surface of the die block and against the guide; shift it to where it has been determined to place the largest opening, and, after clamping it, scribe through the opening in the die plate. Make a mark, as *l*, Fig. 10 (*b*), on the surface of the die in line with the mark *a* on the templet. Shift the templet along the guide strip until mark *b* coincides with *l* and scribe through again. This scribed outline gives the location of the edge of the gauge pin. Next insert the model into the opening of the templet and shift it along the guide strip until mark *c* on it is in line with mark *l*. Now scribe through the holes in the model. The laying out is thus completed. It is a good idea to lay out the die on a piece of paper first; this will greatly aid in locating the openings centrally in the die block.

29. Laying Out a Compound Die.—As far as the laying out of a compound die is concerned, there are no special directions needed. Probably the best practice is to make the lower die first; the gauge pin may be located on the stripper in exactly the same manner as with a plain die.

MAKING THE DIE.

30. Cutting the Openings in the Die Block.—The required outlines of the openings having been scribed on

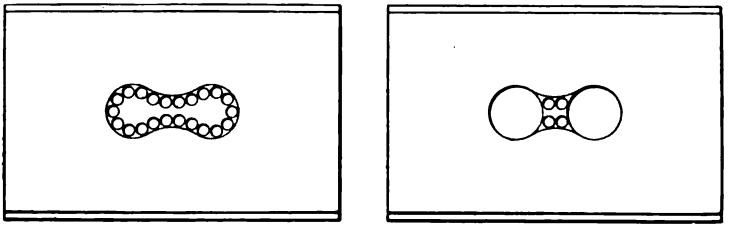

FIG. 11.

the die block, they may be cut through the die by drilling a series of small holes close together, as shown in Fig. 11 (*a*),

and then cutting out the metal between the holes with a narrow drift. The die is usually finished by filing to the scribed lines, making the openings larger at the bottom, so that the punchings may easily drop out. The clearance given may be from 1° to 2°; to determine if the clearance is the same all around, a diemaker's square will be found advantageous. The diemaker's square differs from the try square in that its blade, instead of making an angle of 90° with the stock, makes an angle of 90° plus the clearance angle. Obviously, the blade of the square must be very narrow in order that it may be used for small openings.

31. When cutting the openings in the die block, the toolmaker can often save himself considerable work, and make a better job at the same time, by forming circular arcs through drilling, counterboring, or reaming, if their formation by such means is possible. Referring again to Fig. 11, instead of drilling a series of small holes, two large holes may be drilled, as shown at (*b*), and clearance may then be given by reaming from the bottom with a taper reamer; considerable filing is thus saved, and, at the same time, the circular arcs at the two ends of the opening will be more nearly circular than filing could produce them. The metal remaining between the two large holes can then be cut out by drilling the small holes shown, and the die can be finished by filing the two reversed arcs to the scribed lines.

32. Filing Templet for Symmetrical Work.— Die blocks for work that has an axis of symmetry, as *a b*, in Fig. 12 (*a*), can often be made advantageously by the aid of a hardened steel **filing** or **profiling templet.** Such a templet is shown in plan view in Fig. 12 (*b*). Thin sheet tool steel, about a scant $\frac{1}{32}$ inch thick, is very good material from which to make this templet. Scribe a straight line *a' b'* on the templet, to represent the axis of symmetry. Then, to one side of it lay out one-half of the required outline, as *c d e f*. On the other side, lay out lines, as *c g f*, sufficiently removed from the axis of symmetry to clear the other half of the outline. Next, on

lines perpendicular to a' b', mark the centers of the holes h, h equidistant from a' b'. These holes receive fillister-headed screws by means of which the templet is to be attached to the die block. Drill two small dowel-pin holes, as i and i', so that their centers lie on a' b'. Drill the holes h, h; cut out the opening in the templet, filing very carefully to the line c d e f, and then harden it. If the templet is hardened in water or oil, it will be sprung considerably. A better way of hardening it is to place it quickly after heating between two planed cast-iron blocks; the templet will then come out almost flat. Now lay the

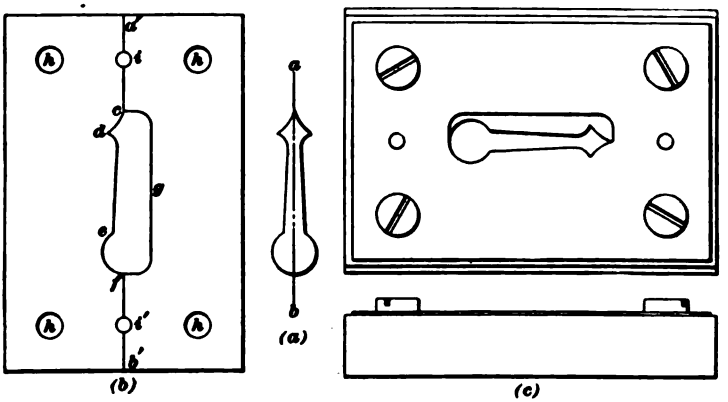

FIG. 12.

templet on the die block and clamp it to it. Using the templet as a jig, drill the dowel-pin holes, spot the location of the holding-down screws, and drill and tap holes to receive them. If circumstances permit, it is a good idea to locate the holes h, h so that they can be used afterwards for attaching the guide strips to the die block. Fit dowel pins to the holes drilled for them, and place the templet over them. Mark one-half of the outline on the die block by scribing from the templet; then turn the templet over and scribe the other half. Rough out the opening in the die block and then attach the templet to it by means of screws. One-half of the outline can now be filed to the templet,

which is then reversed as shown in Fig. 12 (*c*), and the other half finished. Obviously, both halves of the outline will be perfectly alike.

33. Giving Clearance.—Clearance may be given to die blocks in several ways. If the opening is rather small, it can usually be done only by filing; when the opening is large, a tapering milling cutter of small diameter can often be used to advantage to rough out the hole. In some cases, the die block may be strapped to an angle plate that is inclined to the right angle; it may then be roughed out by planing or shaping with a single-pointed tool. In general, it will be necessary to finish by filing. As a general rule, the clearance should not extend directly to the cutting edge, but only within about $\frac{1}{8}$ inch of it. Then, the sides of the opening down to the beginning of the clearance should be straight, and make an angle of 90° with the bottom surface of the die block. The objection to carrying the clearance clear to the cutting edge is that any sharpening of the die block will enlarge the size of the opening.

34. Hardening and Tempering the Die Block.— Prior to heating, plug all holes that are not intended for the cutting operation, such as the gauge-pin hole and the screw holes for the guide strips. Fireclay or asbestos may be used for plugging. Heat the die block very slowly and evenly in a clear fire and quench it, keeping it under the quenching fluid until perfectly cold. Many diemakers consider a strong salt brine the best quenching fluid, since with it the die can be hardened satisfactorily at a low heat. This brine can be made by placing in water as much ordinary salt as the water will dissolve. If the die block is hardened at a low heat, experience has shown that there is not only much less danger of cracking, but also that there is a great reduction of the warping. In general, it will prove advisable to harden at as low a heat as is possible with the grade of steel used, no matter what quenching fluid is used. Since brine has a much greater conductivity than clear water, it will abstract the heat much faster from the steel inserted in it.

Since experience has shown that the hardening of steel depends primarily on the rapidity with which the heat is abstracted from it, and, to a much smaller extent, on the temperature range through which it is cooled, it follows that by using brine the same degree of hardness may be obtained from a lower quenching heat.

35. The block having been hardened, brighten its upper surface and temper it evenly. A very good way of drawing the temper is to place a rather heavy iron plate, say from ¼ to ⅜ inch thick, on the fire and then place the die block bottom side down on it. Move it around constantly on this hot plate, so as to avoid local heating; a very good job can thus be made. The color to which the die block should be drawn depends largely on the nature of the material that is to be punched and on the degree of hardness that was obtained in hardening. Generally speaking, dies intended for very thin and easily severed material can be left harder than those intended for severe duty. The average color to which the die block is drawn is a deep straw color; however, practical experience alone can determine if this is the proper color to give in order that the die block may last well.

After tempering, grind the bottom side of the die block to a plane surface; a surface grinder is the best machine that can be used for the purpose. Sharpen the cutting edges by grinding the top surface and try the model in the opening. If this has closed in somewhat, bring it to the right size again by oilstoning. The die block is now completed by putting in the gauge pin.

36. Fitting the Punch.—In American practice, the punch is almost invariably made after the die block has been completed. The rough block is faced square and flat on its lower surface, which is then coppered. The outline of the opening in the die block is now transferred to the punching block by scribing, and it is roughed out nearly to the line by milling, planing, or even by chipping and filing. The very end of the block is now carefully tapered, using the scribed outline as a guide until it will just enter into the die

block. The punching block is then pressed in slightly, preferably in the press, just enough to make a distinct witness mark showing where metal is to be removed. This is repeated until the punching block fits throughout its length. It is then faced off again slightly on its lower surface in order to get rid of all traces of the original beveling, and is now ready for hardening. When fitting a punch for a gang die, it is advisable to first fit the punch to the largest opening, and then the smaller ones afterwards.

37. Hardening and Tempering the Punch.—The hardening is usually done in brine, using a clear fire for heating the punching block. In case the punch is made in one piece, only the end is hardened; it is then drawn to the right color. As in the case of the die block, experience alone can determine which is the best color; generally speaking, the punching block is claimed to last better if made slightly softer than the die block. Thus, if the die block has been drawn to a deep straw color, the punching block may be drawn to a purple or even to a blue color. After drawing the temper, try the punching block in the die block; if it is found to have swollen in hardening, bring it to size again by grinding or oilstoning.

38. While directions have been here given for hardening and tempering dies, it must not be inferred that all dies intended for cutting operations must be hardened. In many cases, the extra expense of hardening is not warranted, as, for instance, when only a relatively small number of punchings of soft material is required. In that case, both the die block and the punch may be left soft. Judgment must be used in determining whether to harden a die or not; if the material is of such a nature that it will rapidly wear out the cutting edges, hardening may be necessary even for a small number of punchings.

39. Fit of Dies.—When relatively thin metal is to be punched, the punching block must be made a very good fit in the die block, otherwise the punching will have ragged

edges. The thicker the metal to be punched, the less perfect the fit need be. Thus, when punching $1\frac{1}{4}$-inch holes through a $\frac{3}{4}$-inch sheet of steel, the punching block is often made as much as $\frac{1}{16}$ inch smaller than the opening in the die block. The punching, and also the hole in the stock that is being punched, will then be tapering. It is claimed that if this is done, there is less danger of breaking the punch and die, as less force is supposed to be required for punching. Obviously, if the punch and die do not fit closely, neither the punchings nor the holes that are punched can be expected to be exact duplicates. If it is essential that the work turned out shall be exactly alike and free from ragged edges, the punch and die must be a good fit in each other.

40. Shear. — Die blocks and, occasionally, punching blocks, may have their cutting edges so formed that the punching is cut from the stock by a shearing cut. The die is then said to have **shear.** The object of giving shear is most commonly the reduction in the force required to do the punching; in other words, it allows a press of a given capacity to punch work for which ordinarily it would not be

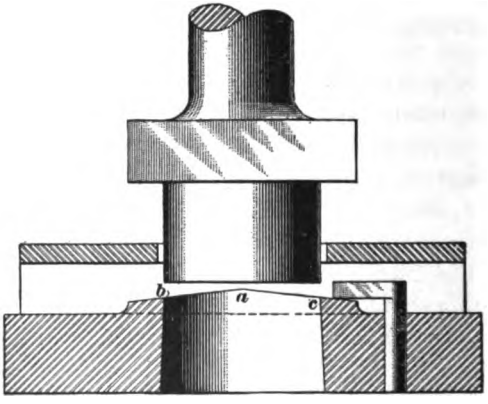

FIG. 18.

powerful enough. Shear may be given either to the die block or to the punching block, and even to both.

41. A common way of giving shear to the die block is shown in Fig. 13, which is a section taken through a die. In this case, the punch is flat at its cutting end. In coming down on the stock, cutting will evidently commence at *a* and proceed toward *b* and *c* at the same time. If the punch is given a shear the reverse of that on the die, the shear will evidently be doubled. Dies intended to have shear are usually made with a raised boss around the opening, as shown in the illustration. This makes it easier to sharpen the die.

42. Sometimes the effect of shear may be obtained in other ways. Thus, referring to Fig. 14, where several holes

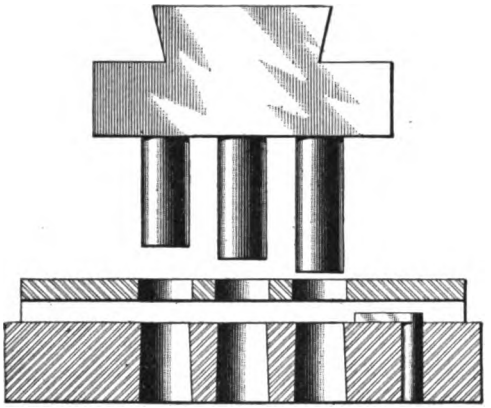

FIG. 14.

are to be punched in one operation, each punching block may be made longer than the one adjoining it on the left. Then, if their difference in length is made slightly more than the thickness of the stock to be punched, the right-hand punching block will have completely passed through the stock before the middle one comes down on it, thus leaving the full power of the press available for each punching block.

43. When the effect of shear is obtained as in Fig. 14, neither the work nor the stock will be bent; if the shear is obtained as in Fig. 13, the stock that is being punched will

come out bent, but the punching will remain almost flat. If the shear is given to the punch and the die block is left flat, the punching will come out crooked, but the stock will be left flat. If both punch and die block are given shear, usually both the stock and the punching will come out crooked. From these considerations, the toolmaker must determine where to put the shear.

SHAPING DIES.

SHAPING OPERATIONS.

44. All metals when in a state susceptible to cutting operations are also more or less susceptible to **shaping operations** of various kinds. The degree to which they are susceptible to these operations depends chiefly on their ductility. There is also a number of non-metallic substances on which shaping operations can be performed to a greater or less degree, such as paper, wood pulp, hard rubber, fiber, etc. The most important of these operations are *bending*, *forming*, *drawing*, *embossing*, *redrawing*, and *curling*. Only such processes as are applicable to materials that can be obtained in the form of sheets will be considered here.

45. Bending.—The process in which part of the surface of a material is pushed from its original plane into a new shape along any line other than a closed curve or closed system of lines, is usually called **bending.**

46. Forming.—**Forming** is a process in which a blank is formed into a hollow shape by being pressed into a cavity in a die.

47. Drawing. — In a certain sense, **drawing** is an extension of the forming process. It differs from it chiefly in the fact that an outer zone of the flat blank that is required to be formed into a hollow shape is confined between two rigid flat surfaces in such a manner that, as it is drawn radially inwards from between them, no wrinkles can form.

48. Embossing.—The raising up of part of a surface to a slight degree beyond its original plane is usually known as **embossing.** It is rather difficult to draw a distinct line of demarkation between forming and embossing, since embossing is a forming process.

49. Redrawing.—The process of **redrawing** is an extension of the drawing process; in other words, it is simply the drawing process repeated in order to deepen the hollow shape formed by drawing.

50. Curling.—The **curling** process may be defined as that process in which the end of each element of a hollow object with walls of uniform thickness is bent either outwards or inwards into an approximate circle, thus forming a hollow cylindrical ring at the end of the object.

BENDING DIES.

51. The simplest form of a **bending die** is the one shown in Fig. 15. Here the upper and the lower part of

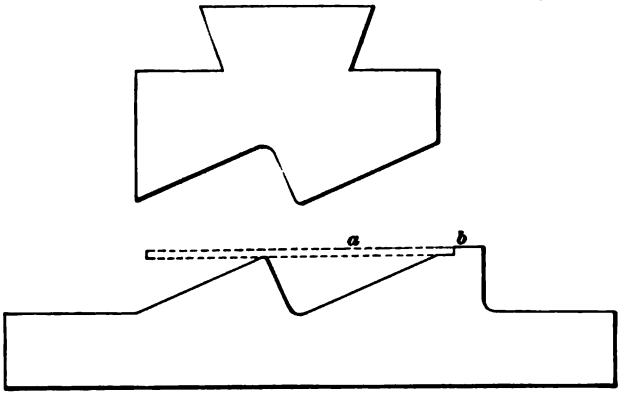

FIG. 15.

the die is so formed that when the upper part is forced down on the blank strip *a* indicated by dotted lines, it will bend it to the required shape. In a bending die, some form of a gauge ring or stop is necessary in order to locate the blank

properly; this must be made to suit the shape of the blank, and, in its simplest form, may be a shoulder, as shown at *b*.

52. When the piece bent by a bending die, as, for instance, that shown in Fig. 16, is examined, it will be found to have a shape slightly different from that of the die. Thus, if the dotted lines represent the shape of the piece while between the faces of the die, on removal it will assume the shape shown in the full lines, by reason of the elasticity of the material. Hence, it follows that for elastic materials the bending surfaces must be arranged to bend the material slightly beyond the required angle of the bend. How much the material must be bent beyond this angle must be determined by experiment in each particular case. In general, the amount will be least for comparatively non-elastic materials, as annealed iron, copper, or brass, and most for more perfectly elastic metals.

FIG. 16.

53. When making any die for a shaping operation, it is to be observed that the lower and upper die cannot have the same shape. This is shown in Fig. 17, where a comparatively thick piece of material *c* is shown between the bending surfaces of the upper die *a* and the lower die *b*. Evidently, the upper die must have, on its bending surface, a curve of a radius equal to that of the lower die *increased by the thickness of the material*. Due attention must be paid to this fact when making any kind of a forming die. It is also to be observed that any material will bend more easily around a curve than around a sharp corner, and at the same time

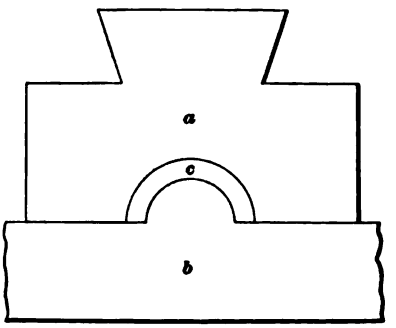

FIG. 17.

there is less liability of forming a crack at the exterior surface of the bend. For this reason, the corners of the bending surfaces should be rounded off. When the substance to be bent is thin and ductile, very little rounding off is needed; the harder and thicker the material, the more rounding off must be given, in order to prevent a crack from forming in the bend.

FORMING DIES.

54. One of the simplest and most common examples of **forming** is the shaping of a flat circular blank, as shown in

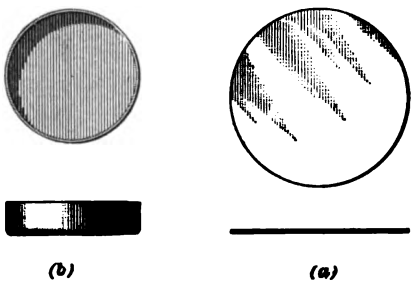

FIG. 18.

Fig. 18 (*a*), into a cup, as shown in Fig. 18 (*b*). This can readily be done in an ordinary single-action press by the aid of a **forming die.** A single-action press is here defined as one that has but one ram.

55. The forming die may be constructed as shown in Fig. 19. Referring to the figure, *a* is a bolster bolted to the table of the press. The die ring *b*, which is bored out to the outside diameter of the cup and then highly polished inside, is fastened to the bolster in some convenient manner; one way of doing this is to attach it by means of the gauge ring *c*. This gauge ring is bored out centrally to the size of the blank; its correct position in reference to the die block is insured by fitting it to a raised cylindrical projection on the die block. Two or more holes may be drilled near the circumference of the gauge ring, to receive the pins of a spanner

wrench. The plunger *d* of the upper part of the die is made equal in diameter to the inside diameter of the cup that is to be formed; the inside diameter of the cup evidently equals the outside diameter diminished by twice the thickness of the material. The blank having been inserted in the gauge ring, the descent of the plunger *d* folds up, or rather bends up, the circumference of the blank, and, in passing through the die block, the plunger straightens out the folds that form. The plunger with the work on the lower end of

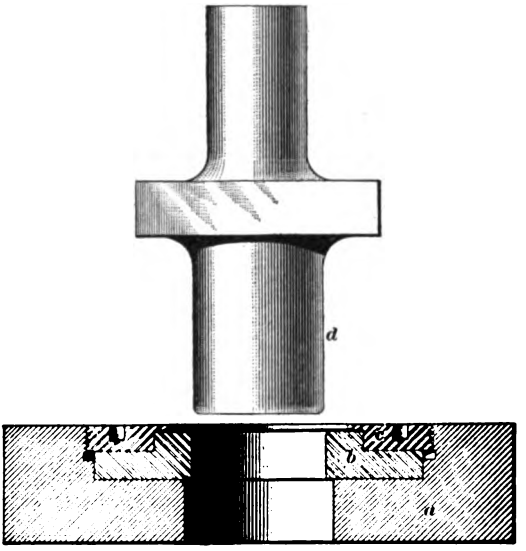

FIG. 19.

it having passed completely through the die block, the upturned edges of the work spring slightly away from the plunger; as the plunger ascends again, the edges catch against the sharp lower edge of the die block and the work is thus stripped off the plunger and falls through the opening in the table of the press. The upper edge of the die block must be rounded over to a radius of about $\frac{1}{8}$ inch.

56. The die here shown, it will be observed, performs but one operation, which is the forming of the blank into the

required shape. Such a die is known as a **plain forming die.** A plain forming die may also be used for forming shallow hollow articles with a flat bottom and tapering or curvilinear sides, such as the well-known pie tins and similar work. In that case, the lower die is solid, but may be fitted with a spring-actuated ejector in case the form of the work is such that it cannot readily be lifted from the lower die after the forming operation has been completed.

DRAWING DIES.

57. When an attempt is made to form a rather deep article from a blank in a forming die, it will be noticed that the edges of the blank commence to wrinkle, and in extreme cases will even fold up so that the folds will lie on top of each other. These incipient folds, as the wrinkles may be called, are well shown in Fig. 20, which is a reproduction of the appearance of a tin-can cover that has been produced by a forming die. Inspecting it closely, it will be seen that, for a short distance beyond the flat end, the sides of the rim are smooth. Farther up, the wrinkles commence to form, and gradually become larger toward the edge of the rim. It is not known who first discovered that if an annular zone of the blank be confined between two flat surfaces strongly pressed together by springs or other means, and that if the metal be then drawn out from between them, no wrinkles will be formed. This discovery is of comparatively recent origin, but has proved of a far-reaching influence in the cheap production of many articles, especially household goods.

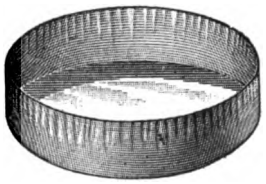

FIG. 20.

58. Plain Drawing Die.—A **plain drawing die** is shown in Fig. 21; this particular die is intended to draw the same piece that was illustrated in Fig. 18 (*b*). Referring to the figure, it is seen that the lower part of the die is identical with that of the die shown in Fig. 19. The upper part

of the die is surrounded by the so-called **blank holder** *a*, which is held in its lowest position by a powerful helical spring *b*. The plunger is free to slide through the blank holder when the latter comes to rest by reason of coming in contact with the blank lying in the gauge ring; to allow this to occur, the stem of the blank holder is slotted, as shown

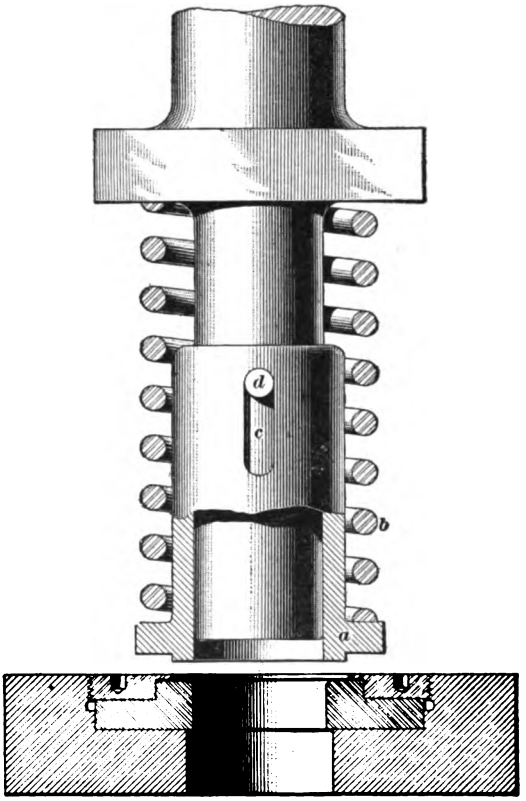

FIG. 21.

at *c*. A cylindrical pin *d* driven into the plunger holds the blank holder. As the plunger descends, the blank holder is forced up and the spring is compressed before the plunger strikes the blank; as the plunger continues to descend, the annular ring confined between the lower surface of the blank

holder and the upper surface of the die block is gradually drawn radially inwards, and, passing over the rounded upper edge of the die block, is gradually formed into a rim without any wrinkles.

59. The work is shown in different stages in Fig. 22. Referring to the illustration, view (*a*) shows a cross-section of the blank; view (*b*) shows the cross-section when the plunger has partially entered the die block; and view (*c*) shows the work when the plunger is fully in the die block. In the die shown, which is designed to be used in a single-action press, the work is stripped off the plunger by the sharp lower edge of the die block.

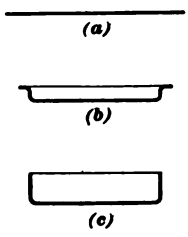

FIG. 22.

60. If the rim formed by the drawing operation shows wrinkles, it indicates that the pressure with which the outer zone of the blank was held was insufficient. The remedy is to stiffen the spring or substitute a heavier one. On the other hand, if the plunger tears through the blank, the spring is too stiff, and must either be eased or a weaker one made.

61. It is essential to successful drawing that the working parts of the die are highly polished, and that the material that is to be drawn is soft. The depth to which a cup can be drawn in one operation depends on the ductility of the material; with well-annealed copper, a depth equal to two-thirds the diameter is often obtained. Experiment alone can determine for each particular case what depth can be attained by one drawing operation.

62. Combined Cutting and Drawing Die.—It is obvious that for drawing a cup as shown, two separate dies are needed, and that two separate operations must be performed in order to form the cup. The first die needed is the cutting die that cuts the blank from the stock; the second die is the drawing die. When a very large number of pieces are to be drawn, however, a die may be designed that will

cut the blank and form the cup in one operation, thus greatly reducing the time cost per piece. Such a die for a single-action press will be about twice as expensive as two single dies.

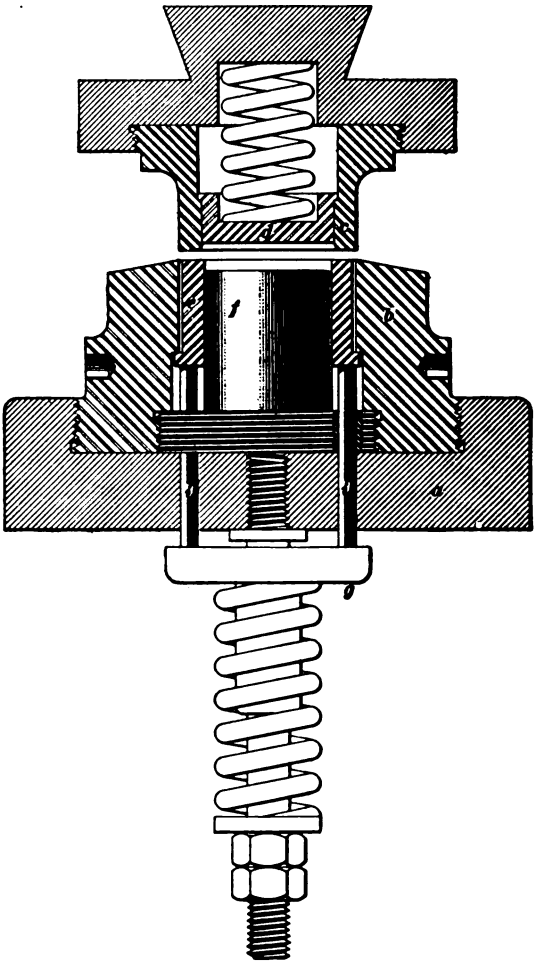

FIG. 23.

63. A common design, usually known as a **spring drawing die,** is shown in Fig. 23. This die is intended to

draw the same piece that was shown in Fig. 18 (*b*). Referring to the figure, *a* is the bolster that is bolted to the table of the press. A die block *b* is fastened to the bolster, and is bored to the diameter of the blank. Its upper edge is sharpened. The blank is cut out by the punching block *c*, the outer edge of which is sharpened to form a cutting edge. The punching block is bored out centrally to the outside diameter of the cup and the inner edge is nicely rounded. A stripper *d*, actuated by the helical spring shown, serves to strip the cup from the upper die in case it should stick there. This stripper, which is free to move in the direction of its axis, is confined as to its lowest position by a shoulder in the punching block and a corresponding flange on the stripper.

The blank holder *e* is placed within the lower die; it surrounds the plunger *f*, which is stationary in this case. The blank holder also serves to strip the finished cup from the plunger. The pressure necessary for successful drawing is obtained from a heavy helical spring placed below the bolster; this spring operates on a movable sleeve *g* with a large flange in which pins, as *i*, *i*, are carried. These pins pass freely through holes in the bolster and the flange of the plunger; they butt against the lower surface of the blank holder, which is thus actuated by the spring. The lower die must be provided with a suitable guide strip, gauge pin, and stripper for the stock, arranged in the same manner as for any ordinary cutting die. These appurtenances have been omitted in the drawing for the sake of clearness.

64. The operation of the die is as follows: The descending upper die cuts the blank from the stock; the blank is immediately gripped by the blank holder and confined between the upper surface of the blank holder and the lower surface of the punching block, the spring below the bolster giving the pressure necessary to prevent wrinkling during the drawing. As the upper die keeps on descending, the blank and blank holder are carried down until they strike the upper surface of the plunger *f*; the outer zone of the blank is then gradually pulled out from between the blank

holder and punching block and the cup is formed around the plunger. The appearance of the work in successive stages is the same as was shown in Fig. 22, except that the work will be bottom side up.

65. In order that the blank holder can be inserted, the lower die and plunger must be made separate. They may then be connected together in any convenient way that will insure that the plunger is central to the die block, as, for instance, by providing the plunger with a threaded flange that is screwed into a threaded recess of the die block, as shown.

66. When a double-action press is available, a very much simpler design of a drawing die is possible. By

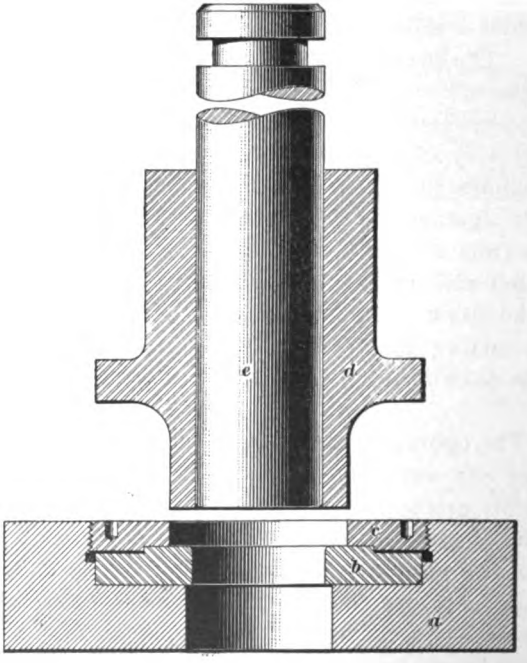

FIG. 24.

double-action press is here meant one that is provided with

two rams working within each other and independently adjustable. The outer ram is so actuated that, for a certain period of the revolution of the press shaft, it will be at rest. Fig. 24 shows a design of a drawing die for a double-action press; the die shown is intended to form the cup shown in Fig. 18 (*b*). Referring to the figure, *a* is the bolster bored to receive the drawing die block *b* and threaded to receive the cutting die block *c*. To insure correct location of the two die blocks with reference to each other, the one may be recessed to fit a central projecting shoulder of the other, as shown. The two die blocks may be rigidly held together by any convenient means; for instance, the outside of the cutting die block may be threaded, and suitable holes may be provided to receive a spanner wrench, as shown in the illustration.

The upper die is made in two parts, of which the outer part *d*, which is the blank holder and at the same time the cutting punch for the blank, is fitted to the outer ram, and the inner part, or drawing plunger *e*, is fitted to the inner ram. The outer ram is so adjusted that when the punch *d* has descended and is at rest, it is close enough to hug the blank confined between its lower surface and the upper surface of the die block, and thus furnish the pressure necessary to prevent wrinkling. The drawing plunger is to be so timed that it will not strike the blank until it has been confined by the blank holder. The cup is then drawn by the plunger. The finished cup is stripped off by the sharp lower edge of the drawing die block. This kind of a die is comparatively inexpensive; its price should not be much more than that of a plain drawing die, and should be considerably less than that of a cutting and drawing die for a single-action press.

67. So far, only the drawing of cups with walls at a right angle to a flat surface has been considered. It is possible to draw work with tapering or curved walls, however, as, for instance, the work shown in cross-section between the upper and lower dies of Fig. 25. In this case, a flange is left on the open end of the work, which is done by not drawing the

metal entirely from between the blank holder *b* and the upper surface of the drawing die block *a*. The die shown is a combined cutting and drawing die; the cutting edge of the lower die is formed on a removable ring *c* and, hence, is easily renewable in case of wear or accident. In order to eject the drawn work from the lower die, an ejector *d* may

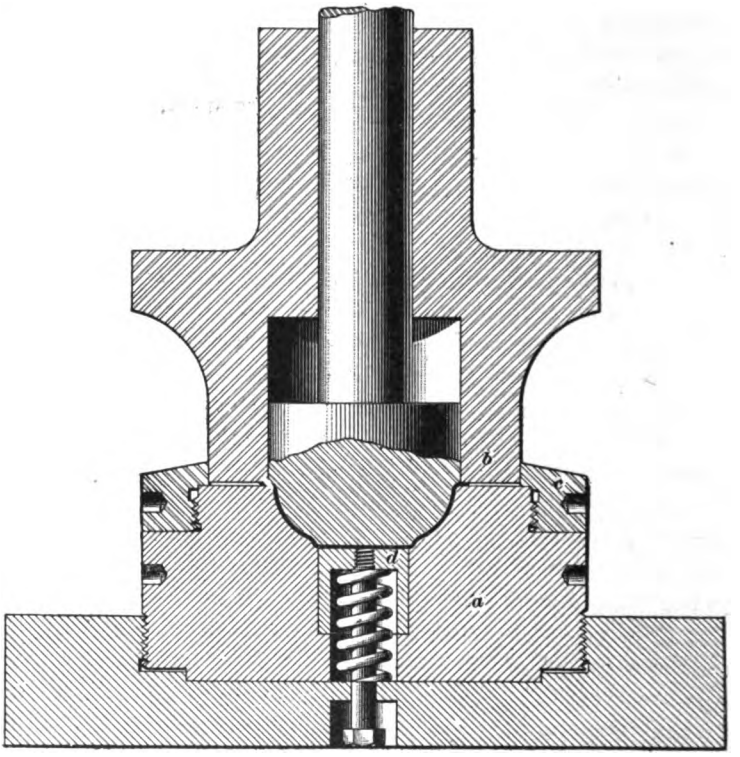

FIG. 25.

be fitted. This may be spring-actuated, as shown, or it may be positively operated by some moving part of the press. Whether or not an ejector (often known as a knock-out) is to be fitted depends on the shape of the work. In many cases, this is such that it can easily be lifted out of the lower die; in that case, the ejector may be omitted in order to cheapen

the die. Drawing dies for work as shown need not always be made of tool steel; in many cases, they may be made advantageously of close-grained cast iron.

68. The particular design of die shown in Fig. 25 is intended for a double-action press; it is also possible to design a combined cutting and drawing die for the same work for use in a single-action press. It may then be constructed on the same general principles as the die shown in Fig. 23.

In order to prevent wrinkles from forming in the walls of work having a cross-section similar to that shown in Fig. 25, the pressure of the blank holder on the confined outer zone of the blank must be quite heavy. If wrinkles cannot be prevented from forming in the body, they can afterwards be removed by spinning the work in a suitable lathe.

EMBOSSING DIES.

69. Plain Embossing Die. — An **embossing die** must consist of two parts, one of which is fastened to the table of the press and the other to the ram. One of the simplest designs of an embossing die is shown in Fig. 26. As shown in the illustration, the raised outline of the work is cut into one of the dies and the other one is worked out to suit the inside of the raised projection of the work. A **plain embossing die** is one that performs only the operation of embossing; it may readily be made, however, to cut the blank and do the embossing in one operation. If this is done, the part of the die that forms the punching

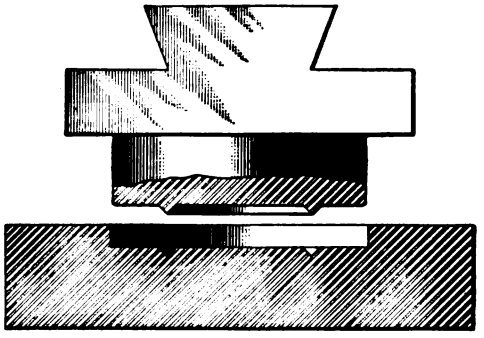

FIG. 26.

block should not have any projections extending beyond the plane of the cutting edge. If there are any projections, they will strike the stock before the cutting edges cut the blank; in consequence of this, the blank will be buckled and drawn out of shape. An ejector will usually have to be fitted to a combined cutting and embossing die. This may be spring-actuated, or be positively operated by some moving part of the press, as is most convenient.

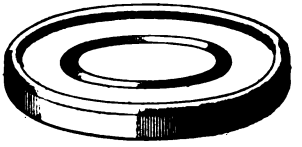

(a)

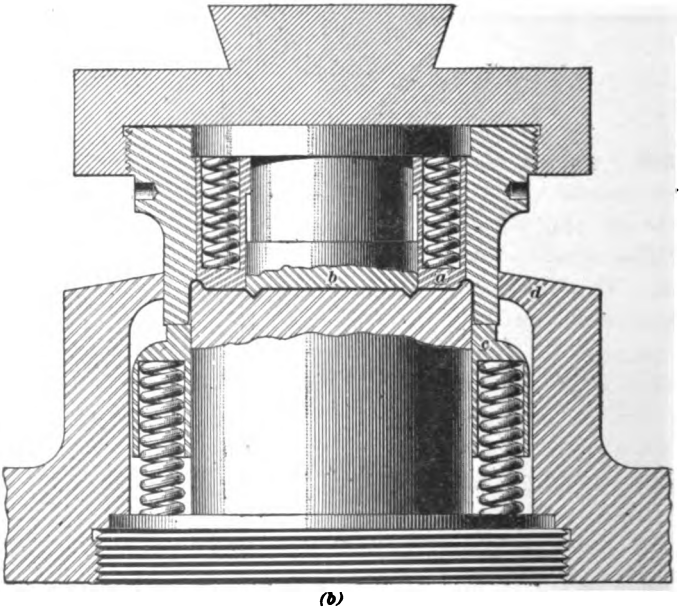

(b)

FIG. 27.

70. Combined Cutting, Drawing, and Embossing Die.—For work like that shown in Fig. 27 (*a*), a die may be designed that will cut the blank, draw the rim, and

emboss the flat top in one operation, thus enormously reducing the time cost per piece below what it would be in case these three operations were performed in separate dies. The design of a die for this class of work depends on the type of press that is available.

71. For a single-action press, the design shown in Fig. 27 (*b*) is a satisfactory one. As a matter of course, the design shown may be modified in various ways to suit conditions. In the illustration, the dies are shown hard together, with the work between them; when the dies are apart, the upper ejector *a* projects beyond the face of the embossing plunger *b*; the combined blank holder and stripper *c* in the lower die is then in its uppermost position. The pressure necessary for successful drawing is supplied by a number of heavy helical springs that may extend into recesses drilled into the blank holder in order to effect a saving in the height of the die. For the same reason, the springs for the upper stripper may be placed within recesses drilled in it, if circumstances permit. The cutting die block may be solid, as shown, or a small tool-steel ring may be attached to a cast-iron body. The point to be observed in making any kind of a combination die is to design it so that it is cheap in first cost, and that all wearing parts can be easily and cheaply renewed.

72. When a double-action press is available, the die may be designed as shown in Fig. 28. Evidently, no stripper will be needed for the upper die, as the embossing and drawing plunger *a* will automatically strip the finished work from the upper die. The lower embossing die *b* may act as an ejector by making it movable. It is then actuated by the spring shown. Comparing Figs. 27 and 28, it is seen that there is far less work required to make the die for a double-action press. The design shown may be modified in various ways, as deemed advisable or desirable by the toolmaker. Referring to Figs. 27 and 28, the lower die should be fitted with a suitable guide strip, gauge pin, and stripper for the stock. These

appurtenances have been omitted in the drawings for the sake of clearness.

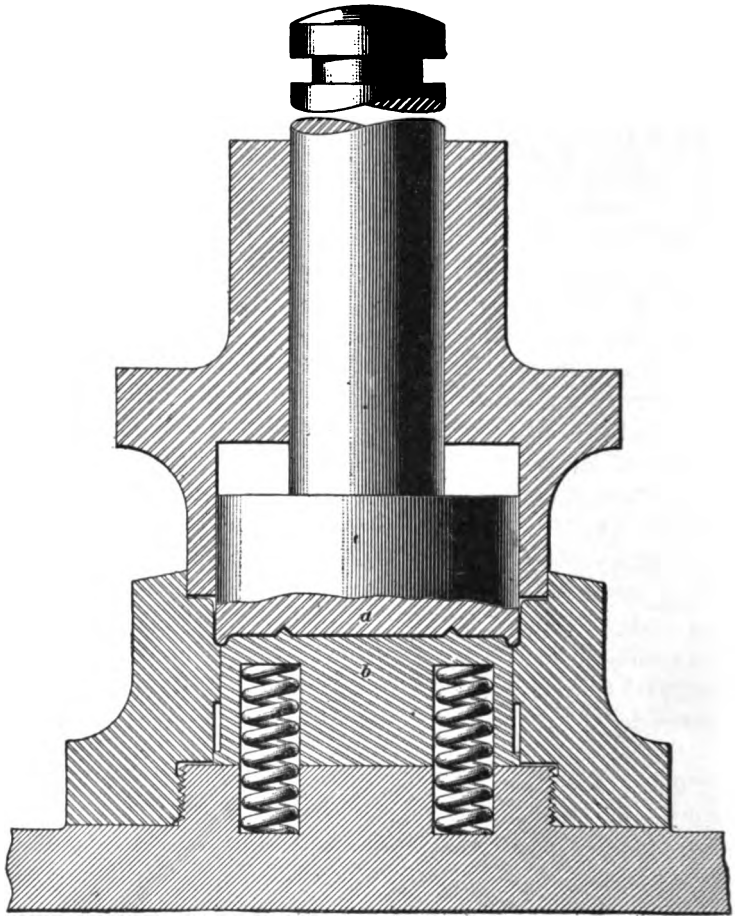

FIG. 28.

73. Both of the designs just shown will discharge the finished work on top of the lower die. In many cases, this is objectionable; the design may then be modified, as shown in Fig. 29, if circumstances permit. In this case, the lower embossing die *a* is entirely separate from the drawing die *b*

and is placed some distance below it. The blank holder *c* cuts the blank and holds it; the drawing and embossing plunger *d* first draws the rim of the work and finally embosses the bottom. As the plunger ascends, the sharp lower edge of the drawing die strips the work off the plunger; the

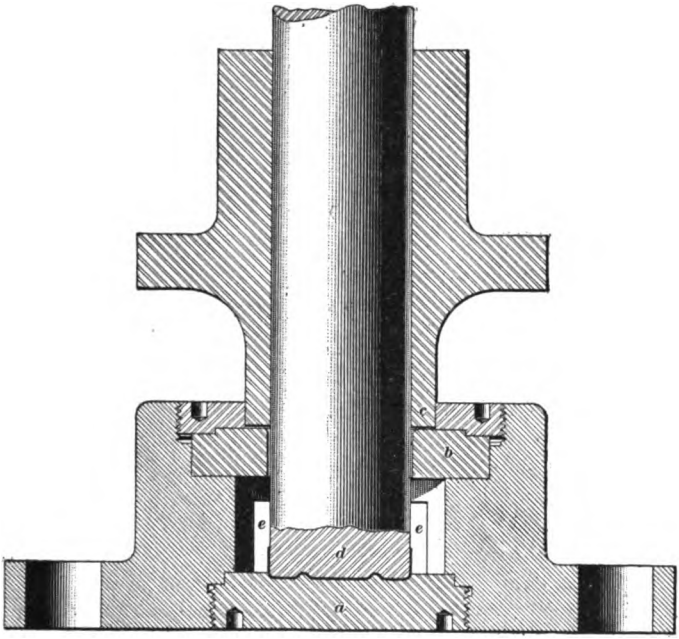

FIG. 29.

work then falls down and is removed through the opening *e* in the lower die. It will rarely be necessary to fit an ejector to the embossing die. Evidently, this design of die can be adopted only for work that can be pushed clear through the drawing die.

SIZE OF BLANKS FOR DRAWING AND FORMING.

74. The only sure method of getting the correct size or shape of a blank that is to be subjected to a drawing or forming operation is a tentative one. Naturally, it is likely

to prove expensive. A blank is cut as near to the correct size as judgment dictates; it is then drawn or formed and the results are observed. A new blank is then prepared, modified from the first one in accordance with the results obtained in the first trial. This is then drawn or formed, and the cycle of operations repeated until the correct size and shape of blank are obtained.

75. For work that is cylindrical, Mr. Oberlin Smith has prepared a formula for the diameter of the blank that will give quite a close approximation to the correct size of the blank.

Let d = diameter of cylindrical cup in inches;
h = height of cup in inches;
r = radius of corner in inches;
x = diameter of circular blank in inches.

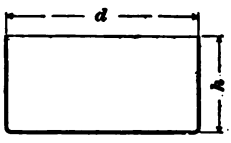

(a)

Then, for a sharp-cornered cup, as shown in Fig. 30 (*a*),

$$x = \sqrt{d^2 + 4dh}.$$

EXAMPLE.—Find a trial diameter of blank for a cup to be drawn 1 inch deep and 2 inches in diameter.

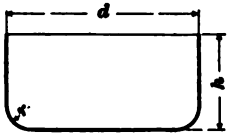

(b)

FIG. 30.

SOLUTION.—Applying the formula just given, and substituting values, we get

$$x = \sqrt{2^2 + 4 \times 2 \times 1} = 3.464 \text{ inches.} \quad \text{Ans.}$$

76. For a round-cornered cup, as shown in cross-section in Fig. 30 (*b*),

$$x = \sqrt{d^2 + 4dh} - r,$$

provided the radius of the corner is not more than $\frac{1}{4}$ the height of the cup.

EXAMPLE.—Find a trial diameter of blank for a cup having a radius of $\frac{1}{4}$ inch to the round corner, when the height of the cup is 1 inch and its diameter 2 inches.

SOLUTION.—Applying the formula just given, and substituting values, we get

$$x = \sqrt{2^2 + 4 \times 2 \times 1} - \tfrac{1}{4} = 3.214 \text{ inches.} \quad \text{Ans.}$$

77. For drawn or formed work that is not cylindrical, but circular in plan view, as, for instance, that shown in Fig. 31, Mr. Oberlin Smith gives the following method for obtaining the trial diameter of blank.

Make a full-size drawing of the profile that is to be formed, as in Fig. 31. Commencing at the intersection of the axis

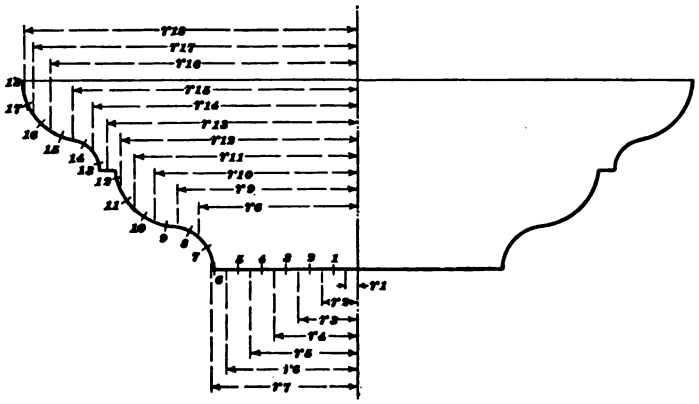

FIG. 31.

with the profile, and to one side of the axis, step off divisions $\frac{1}{8}$ inch long, as *1*, *2*, *3*, *4*, etc. From the center of each division thus stepped off, measure the perpendicular distance, as r_1, r_2, r_3, r_4, etc. to the axis, in inches. Add the distances and extract the square root of their sum to obtain the approximate diameter of the blank.

EXAMPLE.—Assuming that Fig. 31 is a full-size profile of the work, what should be the trial diameter of the blank?

SOLUTION.—Measuring the distances with a decimal scale, they are found to measure .06, .19, .31, .44, .56, .69, .75, .84, .95, 1.06, 1.17, 1.24, 1.31, 1.38, 1.48, 1.61, 1.70, and 1.74. Their sum is 17.46 inches, and the square root of this number is 4.18, which is the approximate diameter of the blank in inches.

REDRAWING DIES.

78. A **redrawing die** does not differ essentially from an ordinary plain drawing die, and may be designed in the same manner for a single-action or a double-action press.

The gauge ring is to be made to the external diameter of the cup, and the blank holder to the inside diameter. The appearance of the cup in successive stages of the drawing and redrawing process is shown in Fig. 32. At (*a*) the blank is shown, which is formed into the cup shown at (*b*) by a plain drawing die, or a combined cutting and drawing die. The cup, after annealing, is placed into the gauge ring of the redrawing die and the plunger in descending pulls the metal from between the blank holder and the upper surface of the drawing die block, first into the shape shown at (*c*) and finally into that of an elongated cup shown at (*d*). This cup after annealing may be redrawn again, its appearance when partially redrawn being shown at (*e*), and, when fully drawn, at (*f*). The greatest amount that the diameter of a cup can be reduced in each drawing operation is usually placed at two-fifths of the diameter. Thus, a cup 2 inches in diameter may in one redrawing be reduced to $2 - 2 \times \frac{2}{5} = 1\frac{1}{5}$ inches. Experiment alone will determine positively for each particular case if this reduction of diameter can be obtained.

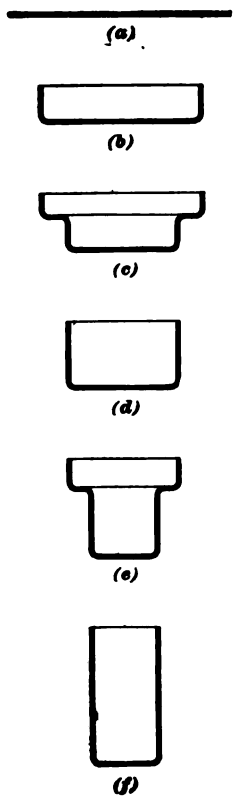

FIG. 32.

79. For some work, a process known as **reverse redrawing** may be used advantageously. Fig. 33 shows a die for reverse redrawing designed for a double-action press. The figure shows, between the plunger and drawing die, a cup that is partially redrawn; it will be observed that the cup is being redrawn in a direction the reverse from that in which it was drawn. In the illustration, *a* is the plunger, *b* the blank holder bored to fit snugly the outside of the cup,

and *c* is the drawing die, the outside of which is turned and polished to fit nicely the inside of the cup. Shapes that

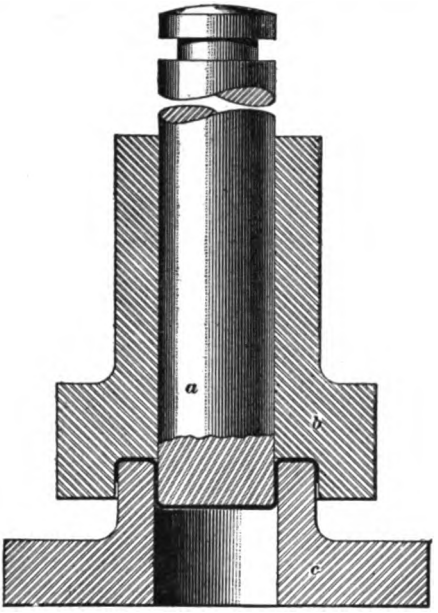

FIG. 33.

may be drawn by reverse redrawing are shown in Fig. 34; these will serve to suggest others.

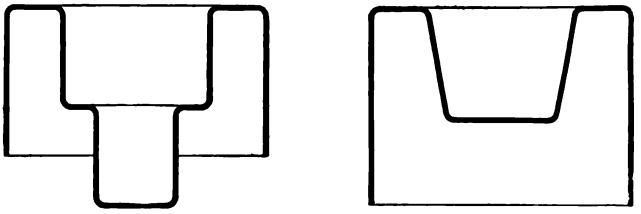

FIG. 34.

CURLING DIES.

80. A design for a **curling die** is shown in Fig. 35. The die shown is intended to curl a bead, as shown in Fig. 36 at *a*, around the open end of a piece of hollow ware. Referring to Fig. 35, the upper die *a* has a projection that

fits the inside of the work, and a semicircular groove is cut into the face of the die block at the base of the projection, as shown at *b*. The upper end of the lower die *c* is recessed

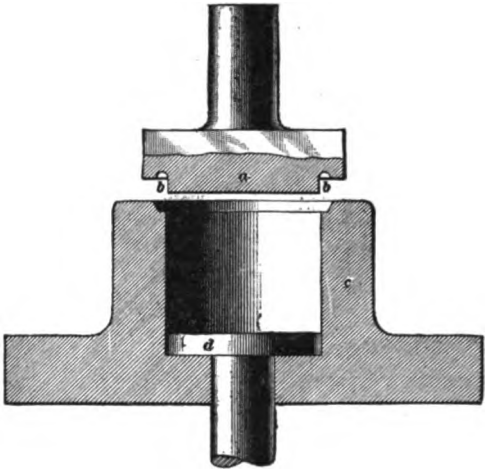

FIG. 35.

to receive the bead; the inclined surface of this recess assists in rolling the bead inwards. This is shown to an enlarged scale in Fig. 36, which shows the bead fully formed. The diameter of the curl, or bead, that can be produced is rarely over $\frac{3}{16}$ inch for a good quality of sheet tin; if a larger bead is produced, the metal will have to stretch so much that it will tear. If the metal is well annealed and has not been hardened by any previous drawing, forming, or embossing operation, a much larger bead can be formed. When the work is of such shape that it cannot readily be removed with the fingers from the lower die an ejector, as *d*, may be fitted to advantage. The same die may also be used for beading the edge of the work over a wire ring.

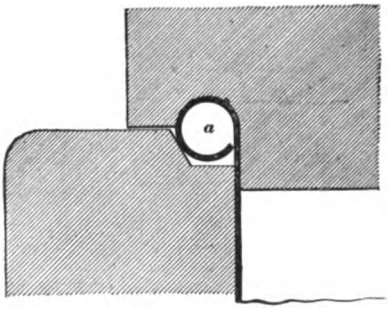

FIG. 36.

TOOLMAKING.

(PART 6.)

JIGS AND JIG MAKING.

GENERAL CONSIDERATIONS.

DEFINITIONS.

1. In the manufacture of duplicate parts, special devices or fixtures are largely used for guiding the cutting tools in such a manner that the work produced by them becomes alike in all essential features, independent of the skill of the operator. Such devices or fixtures are commonly called **jigs**; they are used chiefly for the production of holes of circular cross-section by drilling or reaming operations or by both in conjunction, and are also used occasionally for guiding taps.

2. Jigs are called **drill jigs, reaming jigs,** or **tapping jigs,** or, in case of several operations of different kinds, **combination jigs**; the name given implies the operation in the performance of which the jig is intended to aid. The design of jigs for any of these operations does not differ in any essential particular; hence, whenever the word "jig" is used hereafter, it will be understood to be applied in the general sense.

Copyright, 1901, by THE COLLIERY ENGINEER COMPANY.
Entered at Stationers' Hall, London.
All rights reserved.

ESSENTIAL PARTS.

3. All jigs consist of certain essential parts, which are: the **guides** for the cutting tools; the **body,** which supports the guides and the work; the **stops,** or **gauges,** which locate the work correctly in reference to the guides and to one or more points or surfaces of the work; the **clamping arrangement,** which serves to hold the work to the body; and the **supporting surface** or surfaces, which rest on the table of the drill press and insure parallelism of the axes of the guides with the axis of the spindle that carries the cutting tool.

4. The clamping arrangement and the supporting surface do not necessarily form an integral part of the jig, but may be separate therefrom. Thus, in some cases, the jig and the work may be held together by **C** clamps or machinists' clamps; likewise, the supporting surface may be some suitable part of the work itself. In all cases, however, these two features must exist in some form, and the plane of the supporting surface must be perpendicular to the axis of the guide.

TYPES OF JIGS.

5. Clamp Jigs and Box Jigs. — There are two general types of jigs in common use, each of which has its own sphere of usefulness. The one type is intended for work where the axes of all holes that are cut by the aid of the jig are parallel. The holes need not necessarily be located in the same plane, nor must they be drilled from the same side of the jig. Since jigs of this type frequently resemble some form of a clamp, they are by common consent termed **clamp jigs,** although in some cases the resemblance between the jig and a clamp is very faint, or has entirely disappeared. The other type of jig is intended for work that requires the holes that are to be cut through it, or into it, to be at various angles to one another. Since jigs of this type most frequently resemble some form of a box, the name of **box jig** is commonly applied to any jig intended for holes at angles to one another.

GENERAL REQUIREMENTS.

6. There are a number of general requirements, some or all of which must be partially or entirely fulfilled in the design and construction of any jig. The extent to which any or all of the requirements must be taken into consideration depends on circumstances; each particular case must be decided on its own merits with special reference to the commercial feature. Thus, it may be considered as the height of folly to make a jig worth $50 to do a job worth $20 and which, furthermore, will never be duplicated.

7. One of the most important requirements is the ease of inserting work into a jig and removing it from the jig. Evidently, the easier this necessary operation is performed, the more work can be turned out by an operator when all other conditions remain the same. Ease of insertion and removal under proper management means reduction of the time cost per piece.

8. A jig should be so constructed that it can easily be cleaned, especially those parts of it that act as stops and locate the work properly. Chips getting between the work and the stops will throw the work out of true, and, consequently, will result in an improper location of the holes. While the amount may not be very large, in many cases it will be sufficient to spoil the work. Now, since it is generally agreed that the most stringent orders will fail to make an operator clean the stops of a jig properly before inserting a new piece of work when a large output is demanded, it is considered best to make the stops self-cleaning, as far as can be done, or to design the jig so that it can be cleaned with a minimum effort and preferably without any special appliances.

9. Interchangeability of the work depends, in a great measure, on proper location of the stops, which should be so arranged as to give an invariable location of the work in relation to the guides of the jig. When work that is liable to vary slightly in its dimensions is to be operated upon in

a jig, the stops may occasionally have to be made adjustable in order to accommodate any slight variation in size or shape.

10. Ease of clamping the work to the jig, or *vice versa*, is a feature that may profitably be studied carefully if a large number of pieces are required to be made in the jig. A rapid clamping arrangement that needs little muscular effort is conducive to a reduction of the time cost per piece.

11. Clamping arrangements require to be so designed that the act of clamping the work to the jig, or *vice versa*, will not spring the work or the jig. If either is sprung out of true by the act of clamping, inaccurate work will naturally result.

12. Durability of a jig is a requirement that depends on the number of pieces the jig is to be used for as to the extent to which it is to be fulfilled. In general, only such durability should be provided as will serve the extent of service without any serious loss of accuracy.

13. Adaptability to conversion into a combination jig that may be used for either drilling, reaming, or tapping any or all the holes can readily be secured by removable guides of sufficient size, so arranged as to always center themselves during insertion. Since the guides almost invariably take the form of hardened concentric steel bushing, this is, as a general rule, a very easy matter.

14. Capability of accurate duplication is of prime importance not only when the jig is in constant demand, but also when a number of like jigs are required. In the first case, the natural wear and the unnatural abuse a jig is liable to receive will sooner or later call for its duplication; both in the first and in the second case, an accurate duplication can, in almost all instances, be readily provided for by making the jig or jigs either from a master jig preserved for this purpose, or from templets of suitable form made from the first jig and preserved.

15. Sufficient extent of supporting surface will prevent any canting of the jig under the downward pressure of drilling and reaming, and will thus result in a reduction of the breakage of cutting tools. The supporting surface need not necessarily be an unbroken plane; in many cases, three legs, which, of course, will give a steady support in spite of any slight inequalities of the drill-press table, are greatly preferable to an unbroken surface. In other cases, four, and even more, legs whose ends lie in the same plane may prove of advantage, especially when the distance that three legs must be apart in order to prevent canting is beyond the range of the drill press available. In order that the jig may not tip over under the pressure of cutting operations, all guides for the cutting tools must lie well within the polygon that is formed by connecting all adjacent points of support by straight lines.

16. Stiffness is not only desirable for most jigs, but also becomes essential when exact duplication of the work is required. The act of clamping the work to the jig, or the jig to the work, with many designs subjects the jig to bending stresses that tend to deform it. Since these bending stresses cannot be expected to be alike each time the jig is used, it follows that the amount of deformation will vary; consequently, the work done with the aid of the jig will also vary. Stiffness may best be obtained by properly distributing the metal to resist such bending stresses as the jig may be subjected to; the proper arrangement of supports and clamping arrangements will in a measure contribute toward stiffness.

17. Absence of sharp corners means ease of handling; any feature that makes a tool agreeable to the touch may confidently be expected to reduce the time cost per piece.

18. Accuracy of the jig itself, while mentioned last, is the most important requirement. It should always be remembered that any inaccuracy of the jig will be duplicated in the work; and if the cutting tools are loosely guided, the errors may enlarge. While accuracy is essential, there

is such a thing as carrying it to an extreme. The toolmaker should always aim to obtain the accuracy that is essential; any further reduction means a large outlay of money that is generally not warranted by the conditions of the case.

JIG DETAILS.

GUIDE BUSHINGS.

19. Permanent Bushings.—The guides for the cutting tools, which are usually drills, reamers, or taps, most frequently take the form of hardened steel **bushings** set into the jig body. The hole in the bushing is made to fit the drill, reamer, or tap shank closely; the outside of the bushing is exactly concentric with the inside.

20. The bushings may be made in various forms to suit different purposes. Common forms of plain bushings, intended to be driven into suitable holes in the jig body, are shown in Figs. 1 and 2. Referring to Fig. 1, the bushing is seen to be straight inside and outside, except that the end where the drill enters is rounded out to allow it to enter easily. This plain bushing is the cheapest bushing to make, and, if well fitted to the hole that receives it, is thoroughly satisfactory. The only objectionable feature is that when a drill too large for the hole is forced down on the bushing, it is liable to push the bushing through its seat. This is very liable to happen when the jig is used on a multiple-spindle drill press.

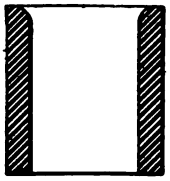

FIG. 1.

21. In order to prevent the bushing from being pushed through its seat, it may be made tapering on the outside, or it may be allowed to project from the seat. The projecting part is then enlarged to form a shoulder. While tapering the outside of the bushing will accomplish the object to be attained, it is an expensive form of bushing to produce.

Likewise, it is expensive to bore the seat for it, especially if great accuracy in the location of its axis is required. On the other hand, a tapered bushing is easily removed.

22. The most common form of a straight bushing with an enlarged head is shown in Fig. 2 (*a*). The shoulder

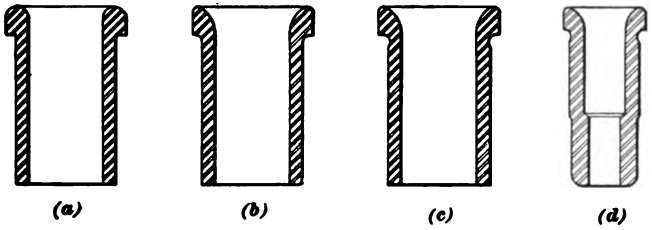

FIG. 2.

under the head is made square. This is objectionable, however, for two reasons. In the first place, in hardening the bushing, a crack is liable to form in the sharp corner; in the second place, while forcing the bushing home into its seat, the head is rather liable to be broken off. The end that receives the drill is rounded off inside and out, usually semicircular, as shown.

23. A better form of a straight bushing is shown in Fig. 2 (*b*). Here a liberal sized fillet is left under the head, which obviates the liability of cracking in hardening, and reduces the liability of breaking the head off while forcing the bushing home. In the bushing shown, the end is rounded out considerably more on the inside than on the outside; this makes it easier for the drill to find the hole and hence is preferable to the semicircular rounding off shown in Fig. 2 (*a*). When the bushing is to be ground on the outside after hardening, it is advisable to very slightly neck it down under the shoulder with a round-nosed tool; when grinding the outside, the emery wheel can then pass clear over the part being ground. The necking down is clearly shown in Fig. 2 (*c*).

24. In many cases, it is necessary for the bushing to project some distance beyond the lower part of its seat, in

order that the point of the drill or end of the reamer may be supported close to the work. In that case, the bushing may take the form shown in Fig. 2 (*d*). As shown in the illustration, it is counterbored part way down, in order to reduce the friction of the drill or reamer against the inner surface of the bushing. The part that serves to guide the cutting tool does not, in general, need to be any longer than twice its diameter.

The bushings so far shown are not intended to be removed except for the purpose of renewal when worn.

25. Removable Bushings.—Any ordinary jig can readily be converted into a combination jig by fitting it with two or more sets of bushings. One set may then be made to fit the drills; the second set may be made to guide the reamers; and the third set may suit the tap shanks. Obviously, the bushing must be easily removable. There are quite a number of ways in which this may be done.

26. The simplest way is to make a straight bushing a sliding fit in its seat and then confine it by a setscrew. While this can be done advantageously in many cases, in others the location of the bushing prevents the use of a setscrew. If that happens to be the case, some toolmakers will fit a tapered bushing to a tapered seat, relying on the friction to hold the bushing in place during the cutting operations.

27. Some forms of a tapered removable bushing are shown in Fig. 3. The simplest form is shown in Fig. 3 (*a*);

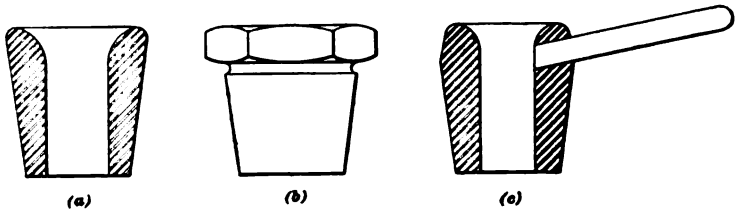

FIG. 3.

the bushing is removed by driving it out with a drift and a hammer. A better form is shown in Fig. 3 (*b*). Here the

bushing is made long enough to project beyond its seat; its projecting part is made hexagonal to receive a wrench, by means of which it may be loosened. In order that the time required for the handling of the wrench may be saved, the projecting part may have a handle permanently attached to it, as shown in Fig. 3 (*c*). The objection to this last form is that, in many cases, the handle may interfere with easy handling of the jig.

28. Tapered removable bushings are not only open to the objection that they are expensive to produce, but also are liable to be thrown out of their true location by any foreign matter, such as chips or waste, getting between the outside of the bushing and its seat. In this respect, a straight removable bushing will have the advantage, since it will push all foreign matter out of its hole during insertion. On the other hand, in the case of the tapered bushing, wear of the seat will not affect the accurate location of the bushings to an appreciable extent.

29. Removable bushings may be threaded on the outside, and may be provided with a hexagonal head, as shown in Fig. 4 (*a*). The seat for the bushing is then

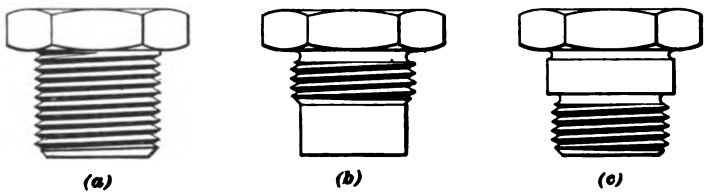

FIG. 4.

chased or tapped to suit. Since the bushing is very liable to change its shape and diameter in hardening, a bushing that is threaded should be finished entirely before chasing the thread in the seat. Obviously, after hardening, it is difficult to grind the thread truly concentric with the hole; for this reason, the use of a bushing of the form shown in Fig. 3 (*a*) is not to be recommended for work that requires very accurate location of the holes. Furthermore, the

unevenness of the thread induced by the hardening process will cause a rapid wear of the thread in the seat, thus destroying the accurate location.

30. A better form of a threaded bushing is shown in Fig. 4 (*b*) and (*c*). Here the thread is not relied on to center the bushing properly, but serves merely as a convenient means of attaching and detaching it. The bushing is centered by a cylindrical part that closely fits a corresponding part of the seat; the thread is made a fairly good fit in the seat. The cylindrical part of the bushing may be either below or above the threaded part; if it is above, the thread in the seat can be tapped clear through, which allows the use of a plug tap. This design of a threaded bushing is preferable for accurate work, since the cylindrical part, after hardening, can be ground true with the hole. While the bushings shown in Fig. 4 all have a hexagonal head, they may be, and occasionally are, made with a large nurled head, and also with a handle similar to that shown in Fig. 3 (*c*).

31. Clamp Bushings. — A jig bushing may serve a double purpose; that is, it may be used for guiding the cutting tool and, at the same time, for clamping the work to

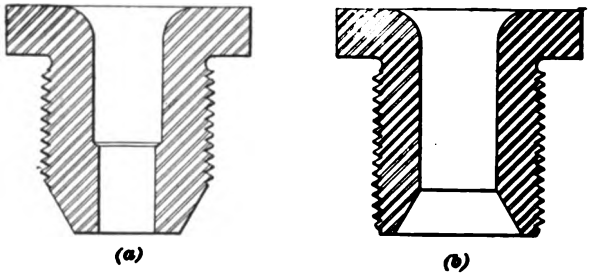

FIG. 5.

the jig body. This is done by making the threaded part of the bushing long enough to allow the end to be screwed down on the work. There are many cases where the adoption of one or more clamp bushings will allow a very simple design of a jig.

32. In some cases where the work has cylindrical projections or a recess, a jig bushing may be made to act as a stop for centering the work properly and clamping it at the same time. Thus, if the work has a cylindrical or conical recess, the lower end of the bushing may be turned conical, as shown in Fig. 5 (*a*). If the work is to be centered by a cylindrical or tapering projection, the lower end of the bushing may be recessed conical, as shown in Fig. 5 (*b*).

33. Size of Guide Hole.—The size of the hole in the bushing has a very important influence on the accuracy with which the holes are drilled into the work. In all cases, the drill or reamer must be loose enough in the bushing so as not to bind and seize. This looseness does not need to be much; if the hole is .001 inch larger than the cutting tool, there is little danger of sticking. How much the hole should be made larger than the drill would be easily determined if it were not for the fact that the commercial sizes of the drills do not, as a general rule, agree very closely with their nominal size. While the variation between different drills of the same nominal size is not very large, and not sufficient to be appreciable for ordinary work, this variation becomes quite appreciable when accurate work is to be done by jig drilling.

If a number of drills of the same nominal size are measured, some will be found over size, some under size, and, perhaps, a few correct size. The toolmaker now has the choice of several methods of procedure. He may make the guide hole sufficiently large to fit the largest drill in the lot, which involves a consequent serious looseness of fit of the under-size drills; or he may make the guide hole standard size and stone down all drills that are over size; or, further, he may make the bushing to suit the smallest under-size drill, and stone all other drills down to suit this size.

34. Which of these methods is to be adopted is purely a question of the accuracy with which the holes are to be located, and the accuracy with which the drilled holes are to represent their nominal size. When accuracy of location

is the most essential factor, the third method is preferable; if keeping the holes to the standard size is deemed most important, the second method may be adopted; and for a comparatively rough job, the first method may be chosen. In choosing a method, it is to be observed that great accuracy, in regard to keeping all holes drilled with the aid of the jig to the same size, must not be expected by drilling; as well known, a drill can drill a hole considerably larger than itself if it is ground so that its point is out of center.

35. Material for Bushings.—The material to be chosen for making the bushings depends on the resistance to wear that is deemed essential. Hardened tool-steel bushings left as hard as fire and water can make them will resist wear better than machinery-steel bushings that have been case-hardened with cyanide or prussiate of potassium. Machinery steel will answer very well for bushings that are intended for temporary jigs; if the jig is in constant use, however, it is usually advisable to choose tool steel and harden the bushings.

36. Grinding Bushings.—Since the hardening process not only changes the size but also the shape of the bushings, they should be ground both inside and outside after hardening, if great accuracy in the central location of the guide holes in reference to the seat is deemed essential. In many cases, however, dependence can be placed on the fact that forcing the bushing home will partially correct any deviation from roundness induced by hardening, especially if the walls of the bushings are thin. In that case, the bushings may be lapped to size after they have been forced home.

CLAMPING DEVICES.

37. Jigs are supplied with **clamping devices** of various forms for one or both of two different purposes: to clamp the work to the jig body or to clamp some part of the jig made movable to provide for inserting and removing work.

38. Clamps intended for the purpose first mentioned may be designed in various ways to suit different conditions. For some work the hook bolt shown in Fig. 6 is very well adapted, being cheap in construction and easily applied. The bolt proper passes through a hole in the jig, which it fits closely. It is made long enough to have the head hook over some projecting part of the work, and may be supplied with a wing nut as shown, or have an ordinary hexagonal nut. In some cases, a large nurled nut may be of advantage. The greatest clamping pressure can be obtained with a hexagonal nut and a wrench; a moderate pressure can be obtained with the wing nut or the nurled nut. However, the wing nut or nurled nut allows the hook bolt to be applied more rapidly. It will be understood that in order to allow the work to be inserted or removed, the loosened hook bolt is turned so that its head is away from the work; when the work has been inserted, the head is turned toward the work and hooks over it. The clamping is then done by screwing up the nut.

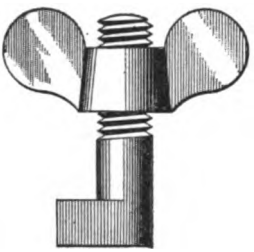

FIG. 6.

39. In jigs that partially or entirely surround the work, it is most commonly held in place by setscrews, which may be designed in several ways. When drop-forged thumbscrews are available, they are generally used, since comparatively little work is required to finish them. When these cannot be obtained, the setscrews may be made as shown in Fig. 7 by driving a cylindrical pin into a hole drilled through the head of the screw. In many cases, the ordinary setscrews that can be bought in the market may be used. These, however, require a wrench for tightening, and hence are not so readily used as thumbscrews, or the screw illustrated in Fig. 7.

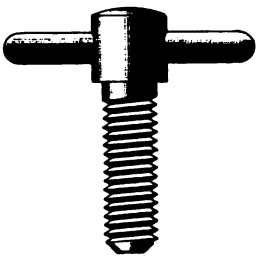

FIG. 7.

40. Fig. 8 shows a common clamping arrangement for locking two parts of a jig together. The thumbscrew shown

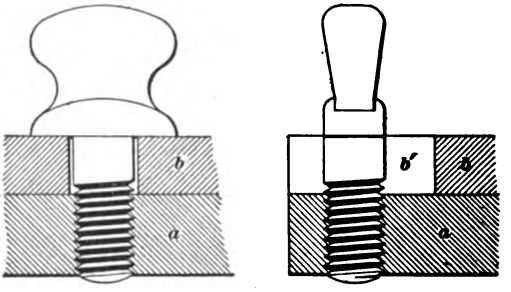

FIG. 8.

is screwed into a tapped hole in the jig body, as *a*. The shank passes through a slot *b'* in the movable part *b* of the jig. This slot is wide and long enough to allow the head to clear it when the screw has been given a quarter-turn from the position shown. Evidently, this is a very rapid clamping arrangement. The only objection is that, as the threads and the bearing surfaces wear, the head will finally come in line with the slot in the movable part.

41. Fig. 9 shows a hinged bolt, which is hinged to the stationary part *a* of the jig by means of the pin shown. The

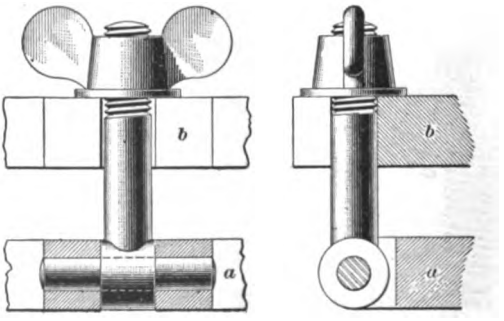

FIG. 9.

bolt passes through a slot in the movable part *b*, open on one end, and is provided with a nut and washer. The nut may

be a wing nut, as shown, or a hexagonal or nurled nut. Wear of the bearing surface or of the pin joint does not affect the clamping. As the nut must be unscrewed some distance to allow the bolt to be swung clear of the slot, this arrangement is not quite so rapid as that shown in Fig. 8.

42. Fig. 10 shows a hinged cam-lever pivoted to the stationary part *a* of the jig. Its shank passes into a slot in the

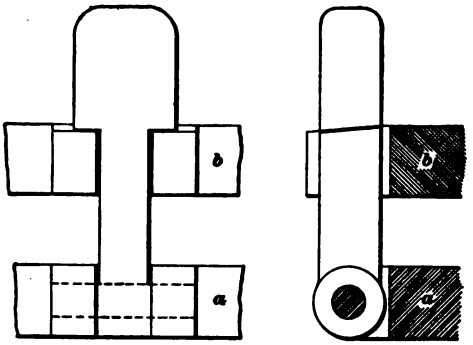

FIG. 10.

movable part *b*; the bearing surfaces of the head engage inclined surfaces of the movable part. Where extreme rapidity of clamping is desired, this design can be recommended.

STOP-PINS.

43. In order to prevent any shifting of the work in the jig during the cutting operations, one or more **stop-pins** may be provided. These are usually made cylindrical, and are closely fitted to the guide bushing. They should be provided with a suitable handle to facilitate withdrawal. To prevent shifting of the work, a stop-pin is pushed through the bushing into the hole in the work as soon as the hole has been drilled. Since the work must be confined at least in two places to surely prevent any liability of shifting, two stop-pins are often provided. It is a good idea always to select the holes that are the farthest apart for the stop-pins.

EXAMPLES OF JIG DESIGN.

44. Owing to the innumerable shapes that the work a jig is intended for may have, no specific directions can be given as to the design of a jig. The general requirements previously given should in each case be fulfilled to the extent that the circumstances render advisable. The designs given here will serve as suggestions to the toolmaker, but they must be modified to suit conditions and requirements.

45. The simplest form of a jig is shown in Fig. 11. The jig simply consists of a flat plate made of suitable material. The outline of the jig is the same as that of the work; holes are drilled in the jig to serve as guides. The jig is intended to be laid on the work and is then clamped to it by any suitable and convenient means so that its outline coincides with that of the work.

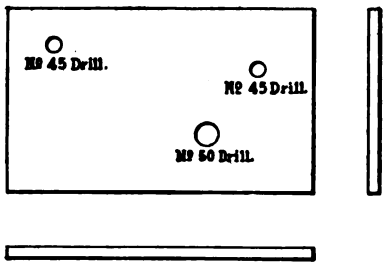

FIG. 11.

46. This style of a jig is cheap in construction, and will serve well for some work where extreme accuracy in the location of the holes is not essential. Obviously, its application is limited to flat work. For small work, such a jig may be made of sheet tool steel and hardened all over; it will then last quite well. Sometimes, when it is to be used for but a small number of pieces, it is advantageously made of machinery steel; in that case, the holes may be case-hardened. When the holes have worn too much, either a new jig must be made or the holes must be counterbored out to receive hardened steel bushings.

47. In the latter case, the jig takes the form shown in Fig. 12, which may be considered as the second step in the development of a jig. Since the bushings can be replaced easily when worn, the center-to-center distance of their axes can be accurately preserved. Beyond this fact, the design

shown is not particularly more advantageous than the one shown in Fig. 11, except that it may be used for sizes that would prevent heating and hardening the entire jig.

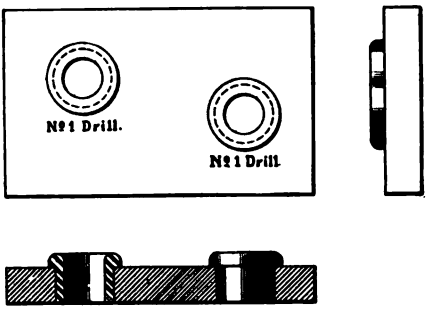

FIG. 12.

48. Fig. 13 illustrates a more advanced form, in which stops have been added for the purpose of alining the jig on the work. In this particular instance, the stops are formed by flanges *a*, *a* and pins *b*, *b*, so placed as to suit the outline of the work. If the different pieces of work are quite uniform, as, for instance, if the outline has been finished by profiling, punching, or milling, quite accurate work

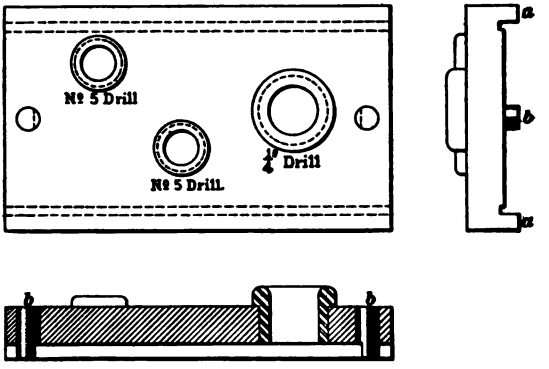

FIG. 13.

can be done in a jig of this design. In many instances, it is not even necessary to clamp the work to the jig, as the stops will often be sufficient to prevent shifting of the jig.

49. A further development of a jig is shown in Fig. 14, where a clamping attachment has been added. The jig is here made in two parts, hinged together at one end. The

pressure of the hand of the operator is intended to clamp

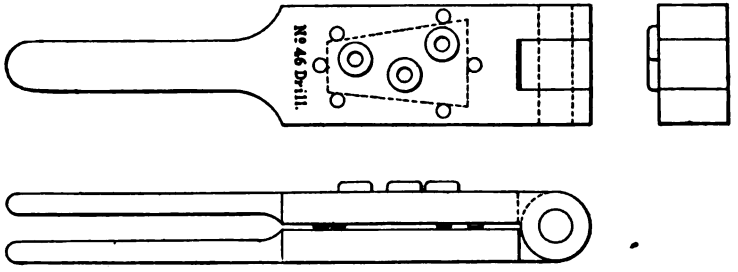

FIG. 14.

the work to the jig; stop-pins placed to suit the outline of the work insure an unvarying location of the holes in refer-

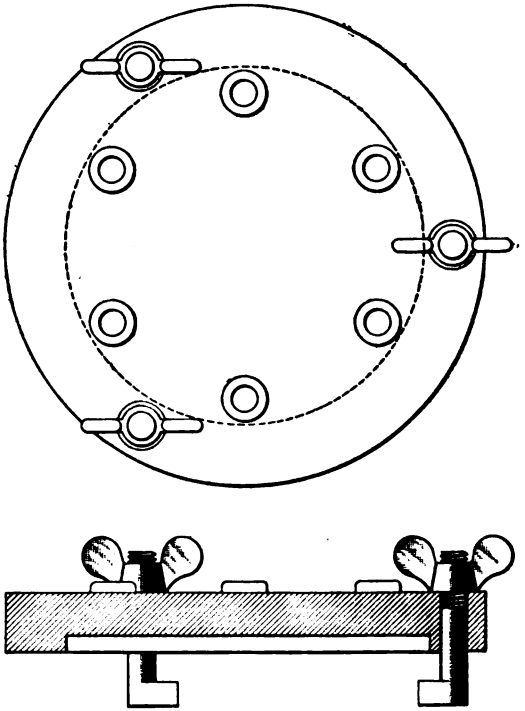

FIG. 15.

ence to the outline. A jig of this kind is well adapted for drilling holes through small flat work of uniform thickness.

50. Fig. 15 shows a jig design well adapted for drilling holes through flanges. The jig body is recessed to go over the flange, and the jig is attached and clamped by means of the hook bolts shown. Attention is called to the position of the hook bolts in reference to the bushings. They should always be so located that neither the head of the hook bolt nor the nut can ever come in the way of the drill, reamer, or tap that is intended to be guided by the bushing. Jigs of this design are readily modified to be alined to a bored or cored hole in the work by providing the lower surface with a projection of suitable shape instead of the recess shown.

51. With the exception of the jig illustrated in Fig. 14, all the designs thus far shown depend on the work itself for furnishing a supporting surface to sustain the downward thrust of the cutting operations. Fig. 16 shows a jig in

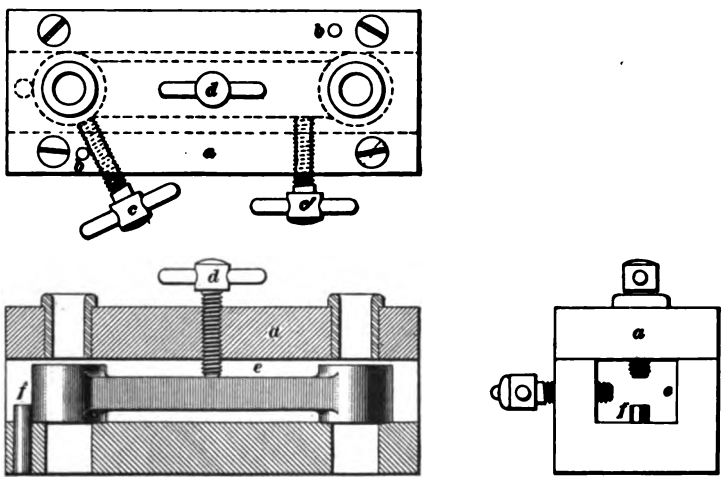

FIG. 16.

which the work is placed within the jig, and where, consequently, the thrust is taken by a suitable surface of the jig. Referring to the illustration, it is seen that the jig is made of two parts for the sake of convenience in machining it. The cover *a* is fastened by the screws shown; an invariable location of the bushings in reference to the stops is insured

by dowel pins *b*, *b*. This precaution is necessary when the stops are contained in a part of the jig that is separate from that which carries the bushings. The work is pushed against the stops by the setscrews *c* and *c'*; it is held down by the setscrew *d*. In this case, the surface *e* of the jig has been selected as a suitable stop to gauge the location of the work sidewise; its longitudinal location is gauged by the stop-pin *f*. It will be observed that the setscrew *c* is placed at an angle with *c'*. Owing to the way in which it bears against the work, the tightening up of the setscrew will not only push the work against both stops, but will also prevent any longitudinal movement, thus doing away with the necessity of placing another setscrew at the right-hand end of the jig.

The design shown possesses several disadvantages. In the first place, it is rather difficult to clean it properly; in the second place, it is easy to spring the work out of true with the setscrew *d*.

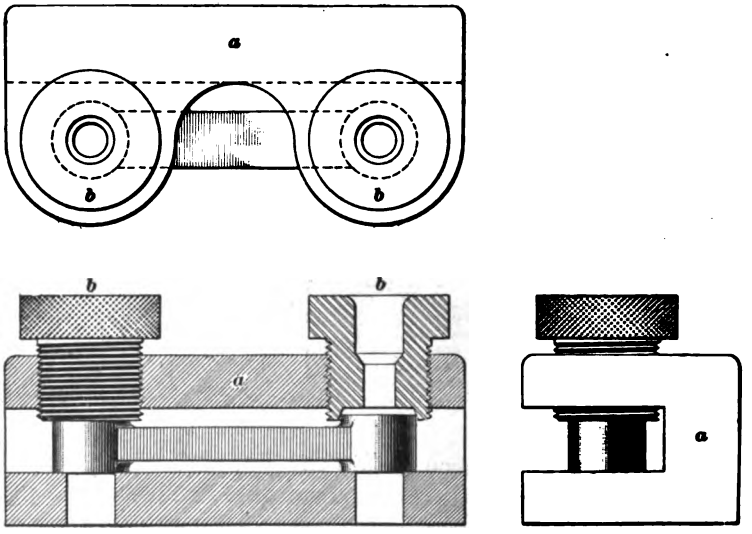

FIG. 17.

52. Fig. 17 shows how a jig may be made for the same piece that the design shown in Fig. 16 was intended for, in

order to overcome the objectionable features of that design. The jig body *a* is composed of one piece in this instance, which is open in front to allow easy insertion and removal of the work, and to make the jig accessible for cleaning. In order to do away with clamping screws and stops, the bushings *b*, *b* themselves are made to act as such. This makes a very simple and cheaply made jig, well adapted for work like that shown clamped in the jig.

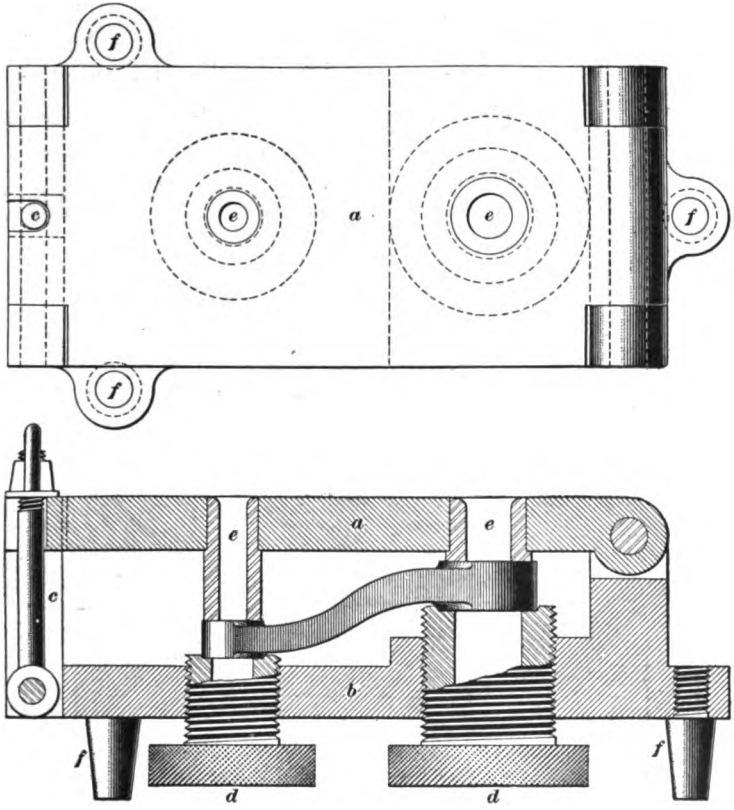

FIG. 18.

53. Ease of insertion and removal and accessibility for cleaning may often be secured by making some part of the jig movable. Thus, in Fig. 18, the top part *a* of the jig is

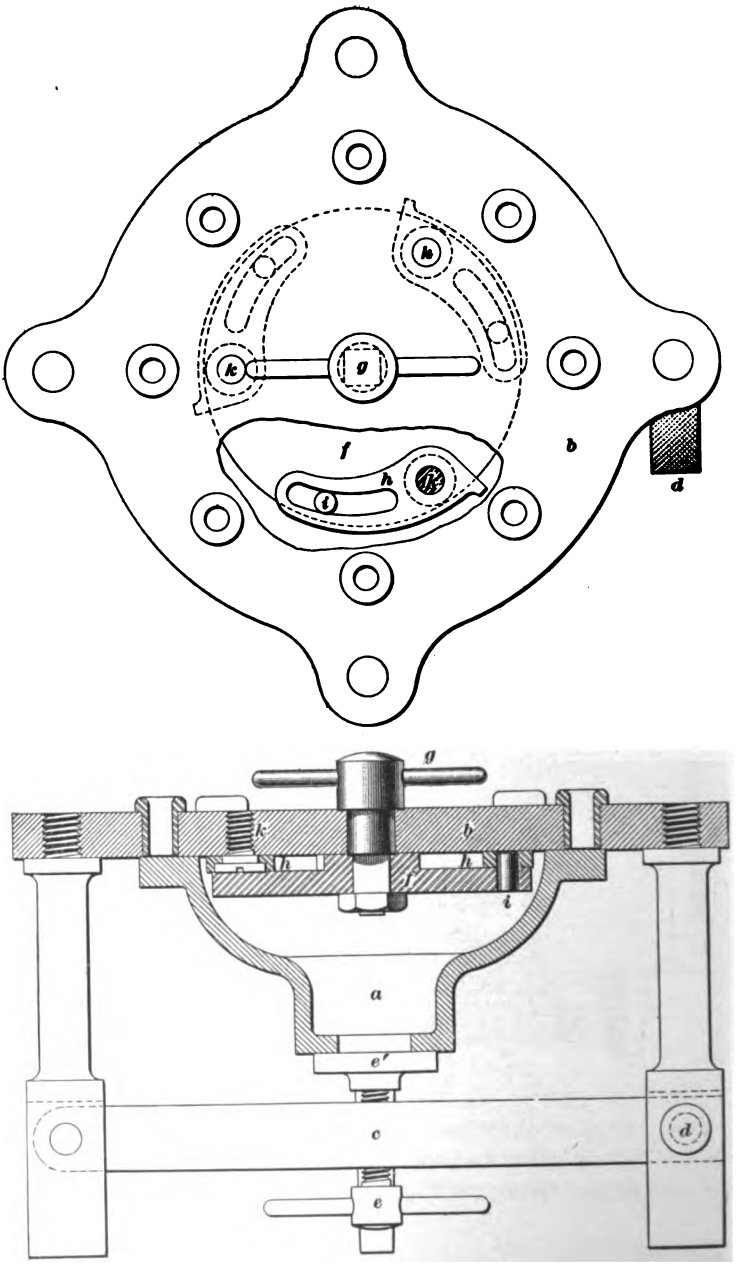

FIG. 19.

hinged to the body *b*; the two parts are clamped together by the hinged bolt *c*. In order to show the slot in *a* clearly, the wing nut and washer of this bolt are shown removed in the plan view. The work is supported against the thrust of the cutting operation by clamping bushings *d*, *d*, the ends of which are chamfered in order to act as stops at the same time. The guide bushings *e*, *e* in this case have a shoulder on their lower end for the purpose of preventing the upward pressure of the clamping bushings from moving them. Three legs *f*, *f* are fastened to the jig body; these legs rest on the drill-press table while the jig is in use. They must be made long enough to insure that the lower end of the clamping bushings will always come clear of the table.

The design is shown applied to work in which the holes do not lie in the same horizontal plane; it may be applied to other work, however. Every part of the jig is accessible; the work is automatically centered and the disadvantages of threaded guide bushings are avoided. The liability of springing the jig in the clamping operation is greatly reduced by providing the clamping bushings with nurled heads on which the fingers of the operator will slip before he can tighten them sufficiently to spring the jig out of true.

54. Fig. 19 shows a form of jig that is largely used for drilling holes in the flanges of work that has a cross-section similar to that shown in the illustration, where *a* represents the work. Since three legs would, in this case, make the jig rather complicated, four are used. The jig body *b* is simply a flat plate into which four legs are screwed. Two opposite legs are slotted to receive the yoke *c*, which is hinged at one end, and secured in position at the other end by a removable pin *d*. This yoke carries the setscrew *e*, by means of which the work is clamped to the jig. When the work has a hole in line with the setscrew, the latter may terminate in a circular plate, as *e'*. To insert or remove the work, the jig is turned upside down; the pin *d* is then removed and the yoke swung out of the way. When the

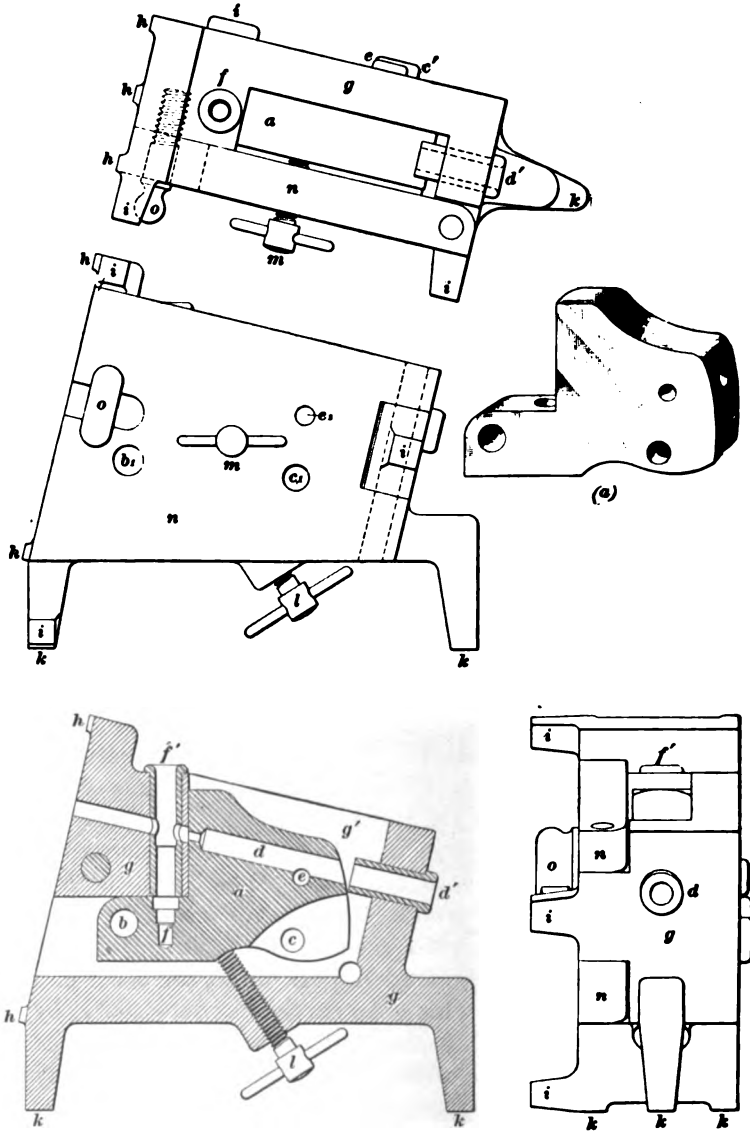

FIG. 20.

jig is used for castings, which, as well known, are bound to vary slightly in size, the jig may be provided with a self-centering arrangement.

Referring to the figure, *f* is a plate that can be rotated by means of the handle *g*. This plate carries three pins *i*, *i* that enter slots formed in the jaws *h*, *h*. These jaws are pivoted to the jig body by screws, as *k*, *k*, and their axes are placed nearer the axis of rotation of the plate *f* than the pins *i*, *i*. In consequence of this, a right-handed rotation of the plate will cause the jaws to swing around their fulcrum screws until they come against the work, which is thus centered. The design of centering arrangement is not given as the best one that could be devised, but simply shows one way of accomplishing the object to be attained.

55. All the jigs so far shown are intended for drilling work in which the axes of all holes are parallel. Fig. 20 shows a jig designed for drilling holes in three different directions in one chucking. Referring to Fig. 20, the work *a*, which is shown in perspective in Fig. 20 (*a*), is to be pierced by the holes *b*, *c*, *d*, and *e*, and is to have the blind hole *f* drilled to a clearance and tapping size. This hole *f* is recessed, as shown, in a separate operation. In the work shown, it is essential that the holes should be located correctly in reference to the two surfaces in contact with the stops of the jig body.

To allow the work to be easily inserted and removed and to give accessibility, the jig is made in two parts, of which the part *g* carries all the bushings, stops, and the legs that form the supporting surfaces. For drilling the hole *d*, the jig is supported on the three legs *h*, *h*, *h*, the plane of which is perpendicular to the axis of *d*. For drilling the holes *b*, *c*, and *e*, the jig is supported on the legs *i*, *i*, *i*. Three points of support, as *k*, *k*, *k*, are provided for drilling the hole *f*. An examination of the shape of the work shows that it can be held against the stops in two directions by a setscrew placed as *l*; it is held against the surface *g'* by the setscrew *m*, which is located in the movable hinged part *n* of the jig.

The part *n* is clamped by the clamp screw *o*. The guide bushings for drilling the holes *b*, *c*, *d*, *e*, and *f* are shown at *b'*, *c'*, *d'*, *e'*, and *f'*, respectively. As far as the holes *d* and *f* are concerned, the holes have two sizes each. The bushings for them are made to the larger sizes, and drilling is continued with smaller drills after the holes have been drilled their large size to the correct depth. The bushing *f'* is pierced by a clearance hole; since this hole penetrates above the guiding part of the bushing, there is no particular objection to piercing the bushing. Clearance holes as b_1, c_1, and e_1 are drilled through the movable cover in line with the bushings for the escape of chips.

LOCATING HOLES.

LOCATING HOLES FROM A DRAWING.

56. The problem of correctly locating the holes that receive the guide bushings presents itself usually in one of two different ways. Either the holes are to be laid out from a dimensioned drawing or they are to be transferred from a model of the work. The choice of method of procedure depends on the accuracy required and also on other conditions, such as the facilities at hand and the nature of the work.

57. When extreme accuracy is not required, the centers of the holes are laid out in the same manner in which the machinist lays out his work, that is, by scribing lines with scriber, surface gauge, etc. In that case, all dimensions are transferred from a steel rule. Since the intersections of the scribed lines represent the centers of the holes, they are carefully marked by a fine prick-punch mark and a witness circle slightly larger than the proposed hole is drawn from each prick-punch mark as a center. There is now the choice of two methods for putting the hole through the jig. The holes may be drilled and reamed in the drill press, or they may be bored in the lathe. Drilling and reaming the holes in the drill press has the advantage of cheapness, but will

insure only a fair degree of accuracy in the location of the holes, since any lack of homogeneity in the metal will cause the drill to run to one side or the other. With reasonable care in laying out the holes, and in the subsequent drilling and reaming, the holes, as a general rule, may be located within a limit of variation of .005 inch. If extreme care is used, the holes may be located within .003 inch; this may be considered as the limit of accuracy attainable by this method.

58. The relatively low degree of accuracy attainable by the use of the method just given is due to the existence of two errors, neither of which can be eliminated entirely by design, although, as the result of accident, either or both may occasionally be so small as to be insensible. One of these errors is that due to an accumulation of the individual errors of each successive stage of the laying-out process; this accumulation of errors finally appears as a lateral deviation of the axis of the prick-punch mark from the true location of the axis intended to be represented by it. The second error is due to running out of the drill, which is caused by lack of homogeneity of the metal or by carelessness, and, frequently, by a combination of both. Either error can be minimized by careful work; the extent to which it can be minimized is a quantity whose relative value depends entirely on the skill of the toolmaker.

59. In order to reduce the limit of variation, a modification of the method previously given may be employed. This modification will neither reduce nor eliminate the error of laying out, but will greatly reduce the error of putting the hole through the jig. In addition, it will insure that the axis of the hole is perpendicular to the supporting surface. After laying the holes out properly, the jig is strapped against a true-running straight face plate and is trued up successively to the various prick-punch marks by means of a sensitive center indicator. After each truing up, a hole is drilled clear through; the hole is then finished by careful boring with a sharp tool. In order to do accurate work, it

is necessary to counterbalance the weight of the jig by attaching a suitable weight to the face plate, and opposite the jig. The boxes in which the lathe spindle runs must be set quite close, and all end movement of the lathe spindle should be taken up. Also examine the belt lacing; if this shows a decided lump, relace the belt smoothly. Otherwise, every time the lacing strikes the cone of the live spindle it will cause the latter to jump to the extent of the looseness between the spindle and its boxes.

With extremely careful work in laying out, truing up, and boring, the holes may be located within a limit of variation as small as .0015 inch. The method given is limited in its application by the swing of the largest lathe available.

60. If the holes in the jig are to be located closer than is usually possible by the method given in Art. **59**, contact measurements, as far as practicable, must be substituted for measurements transferred by scribed lines. The tools required are a micrometer caliper of sufficient capacity or a measuring machine, and a number of annular circular steel buttons. These buttons may be of any convenient size; a good size is $\frac{1}{2}$ inch outside diameter, $\frac{1}{4}$ inch inside diameter, and $\frac{1}{4}$ inch thick. They are attached to the work by means of fillister-headed screws of about $\frac{3}{16}$ inch diameter; No. 10–32 machine screws will be found very convenient for this purpose. The buttons should be made of tool steel and they should be ground truly circular after hardening.

61. The method of using the buttons for a case where all holes are to be in the same plane is perhaps best shown by a concrete example. Let Fig. 21 be a working drawing of part of a jig in which the holes *a* and *b* are to be located with reference to each other and to the surfaces *c* and *d* within

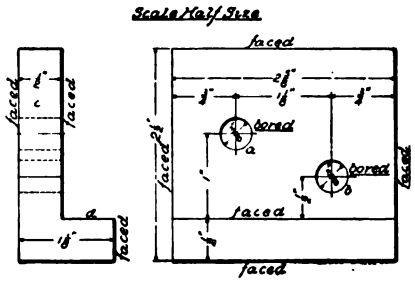

FIG. 21.

as small a limit of variation as possible. The position of the holes is first laid out by scribing lines with the aid of a surface gauge or scribing block, as *e* in Fig. 22, setting the point of the scriber *f* to a steel scale resting on the surface plate and

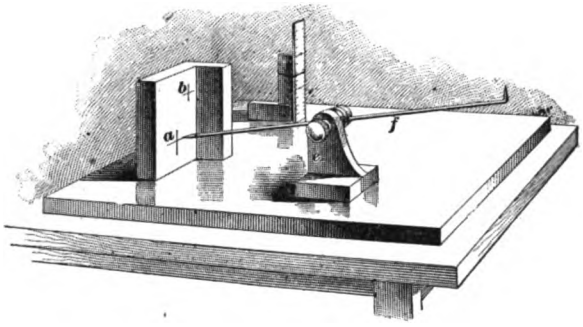

FIG. 22.

held upright by being placed against a square, as shown. For convenience, the scale may be secured to the square by one or two rubber bands. The centers of the holes having been laid out, they are center-punched and then drilled and tapped for the size of machine screw chosen.

The buttons, as *a'* and *b'* in Fig. 23, are now attached by means of the screws. Since the hole in the button is larger than the diameter of the screw, it follows that the buttons can be shifted a limited amount. Assume that the buttons are both .5 inch diameter. Then, to place the button *a'* at a distance of 1 inch (see Fig. 21) from *d*, first make a gauge, as *e*, Fig 23, equal in length to the difference between the radius of *a'* and the given dimension, or $1 - \frac{.5}{2}$ = .75 inch long. Then, shift the button until the gauge *e*, when perpendicular to *d*, will just touch *d* and *a'* with the same degree of tightness with which it fits the micrometer.

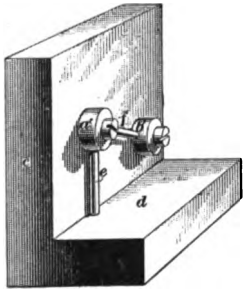

FIG. 23.

To locate the axis of *a'* in reference to *c*, the jig may be

placed on a surface plate with the surface *c* resting on the plate. Then, in a manner similar to that employed to locate the button in reference to *d*, it may be located at the proper distance from *c*. The screw may now be tightened and the proper adjustment of the button tested again, since the tightening process is liable to shift it.

The location of *b'* in respect to *d* is simply a repetition of the method employed to locate *a'*. When we come to locate it in reference to the button *a'*, two ways may be employed. We may obtain the center-to-center distance between *a'* and *b'* by trigonometrical calculation, subtract the sum of the radii of the two buttons from it and file a wire, as *f*, Fig. 23, to it, and use this wire to aline *b'*. If this is not feasible or desirable, the button *b'* may be located from the surface *c* in the same manner that *a'* was located in reference to that surface. After locating *b'*, it is clamped tightly to the piece and then tested again. If found correct, the piece may now be strapped to the face plate of a lathe and trued up by shifting until one of the buttons runs true ; that is, until its axis coincides with the axis of the lathe spindle. An indicator is indispensable for this.

It may be well to call attention to the fact that, in order to do any accurate work, the lathe spindle must be truly cylindrical and must fit the boxes very closely. The face plate should also be counterbalanced and the belt lacing properly fixed. After truing up, the button may be removed and the hole bored to the required size. The other hole is similarly treated.

62. When the guide bushings do not lie in the same horizontal plane, as, for instance, when a jig having the cross-section shown in Fig. 24 is to receive guide bushings in the places indicated by the dotted lines at *a* and *b*, respectively, it is evident that no direct-contact measurement between the buttons is feasible if they are attached to the top and flange of the jig. In such a case, a temporary flat plate, as *c*, may be attached and the buttons may then be fastened to this plate in order to bring them all into the

same plane. This plate must be straight and parallel, and so fastened as to preclude any possibility of shifting. After boring all holes through plate and jig, this plate may be saved; it will be of great value in duplicating the jig. To duplicate the jig, the plate is then fastened in the same

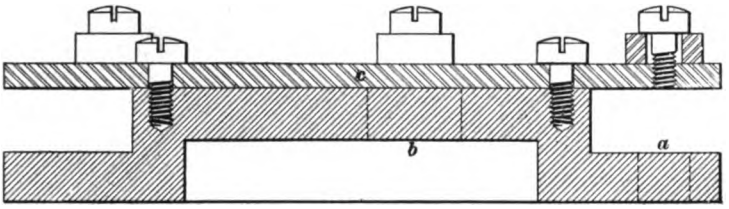

FIG. 24.

relative position it occupied on the jig first made; the jig is next trued up by the holes in the plate, using an indicator for the purpose of obtaining accuracy, and the holes are bored.

LOCATING HOLES FROM A MODEL.

63. When a jig is to be made to suit the holes in a model, there is usually a choice of several ways in which these may be transferred. The choice of method is influenced greatly by the shape of the work and the character of the holes in it. When the holes pass clear through the work, work and jig may often be clamped together and the holes transferred by drilling and reaming. Start the hole with a drill that fits the hole in the work; when the jig has been spotted sufficiently deep, use a drill one size smaller and finish with a rose reamer that closely fits the hole in the work. All holes having been drilled and reamed, enlarge the holes in the jig by counterboring with a counterbore whose teat closely fits the reamed hole.

64. When the hole in the work is blind, i. e., when it does not pass clear through, as the hole *a* in Fig. 25, or when other circumstances prevent a drill and reamer from passing through the hole from below, as in case of the

hole *b*, a different way of transferring must be adopted. The most common way is to transfer the holes as accurately as circumstances permit to the outside of the jig by scribed lines. A so-called pilot hole, as *a'* or *b'*, somewhat larger than the hole in the work, is next drilled through the jig.

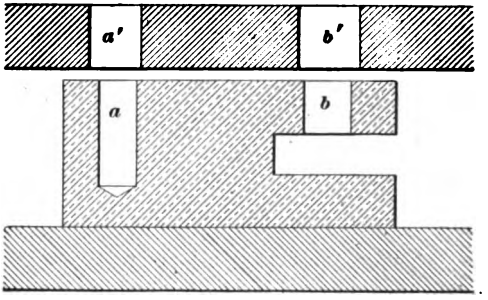

FIG. 25.

The jig is then strapped to the face plate and trued up by the holes in the work, or, if an indicator cannot be applied to the holes, a cylindrical plug is inserted and the indicator applied to the plug. After the jig is trued, the plug is removed; the hole in the jig is then brought in line with that in the model by careful boring.

65. When the jig is too large to be swung in the lathe, or when no lathe is available, the holes in the jig may be brought in line by counterboring. In some cases, the holes

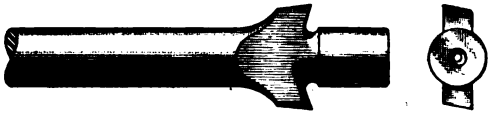

FIG. 26.

in the model are deep enough to allow an ordinary counterbore to be used; to insure good work, the teat of the counterbore must be a good fit in the holes in the model. Owing to the fact that the holes are not in line, the counterbore does not cut equally all around and will have a tendency

to spring toward the side where the least metal is to be removed. This tendency can be counteracted to a great extent by forming the cutting edges in the manner shown in Fig. 26. That is, instead of making them at a right angle to the axis, they are to be inclined inwardly toward the shank. With a counterbore made as shown, and with a reasonable degree of care while using it, a very good job can be done.

66. When the holes in the model are not deep enough to allow an ordinary counterbore to be used, a special counterbore made as shown in Fig. 27 can often be employed. In this case, the teat is stationary; it is formed by a well-fitting plug inserted in the hole in the model. The counterbore is bored out to fit this plug and revolves around it in use. Its cutting edges should be formed in the same manner as those of the counterbore shown in Fig. 26, and for the same reason.

FIG. 27.

MARKING AND RECORDING JIGS.

67. Marking Jigs.—An important element in making jigs and fixtures is the marking by which they may be identified. All jigs and fixtures should have the name of the machine and the part of the machine for which they are intended stamped on them, so that any person can tell just what piece of work the jig is intended for. It is also well to stamp the size of all drills and reamers opposite the bushings through which they are to be used.

68. Recording Jigs.—It is well to give all jigs consecutive numbers and to keep a record of them in proper books or card indexes. In some cases information concerning the jig is entered on the drawing. Each jig should have its place in the tool room or storage room, and this should be entered in the record.

A SERIES

OF

QUESTIONS AND EXAMPLES

RELATING TO THE SUBJECTS

TREATED OF IN THIS VOLUME.

It will be noticed that the various Question Papers that follow have been given the same section numbers as the Instruction Papers to which they refer. No attempt should be made to answer any of the questions or to solve any of the examples until the Instruction Paper having the same section number as the Question Paper in which the questions or examples occur has been carefully studied.

GRINDING.

(PART 1.)

---

(1) What are grindstones?

(2) What is the action of water on a grindstone?

(3) At what speed should a grindstone be run for ordinary work?

(4) What is an oilstone, and in what particulars does it differ from a grindstone?

(5) What is the difference between corundum and emery?

(6) What is a vitrified emery wheel and how does it differ from a silicate wheel?

(7) What is the object of grinding?

(8) Define the terms *polishing* and *buffing*.

(9) What general relation should exist between the grade of an emery wheel and the work it is to perform?

(10) What is glazing, what effect has it on the wheel and on the work, and how may it be prevented?

(11) Describe a grinding machine suitable for grinding or polishing the surfaces of large pieces that cannot be taken to a stationary emery wheel.

(12) Describe the disk grinding machine, and state its advantages.

(13) In what respect does machine-tool grinding differ from hand-tool grinding, and what advantages has each?

Copyright, 1901, by THE COLLIERY ENGINEER COMPANY.
Entered at Stationers' Hall, London.
All rights reserved.

(14) Why is it necessary to use a harder grinding wheel in the Seller's tool-grinding machine than in the Gisholt machine?

(15) State the principal points of difference between the plain and the universal grinding machine, and give the advantages of each.

(16) What is the automatic cross-feed that is commonly applied to grinding machines, and what is the advantage of using it?

GRINDING.

(PART 2.)

---

(1) What are some of the advantages of finishing work by grinding?

(2) What is meant by the grade of an emery wheel?

(3) What effect has the hardness of the material to be ground on the grade of wheel that must be used?

(4) What effect has vibration of the work on the grade of wheel to be used?

(5) What, in general, can be said concerning the difference in the grade of wheels necessary for internal and external grinding?

(6) What are chatter marks, and how may they be prevented?

(7) Describe the process of truing an emery wheel.

(8) What are some of the effects produced by using a wheel that is out of true?

(9) What may be learned concerning the work being done by observing the sparks produced by an emery wheel?

(10) When called upon to set a grinding machine to a given taper, does the operator depend wholly on the graduations; if not, how is the setting accomplished?

(11) If called upon to grind two tapers on the same piece, one slight and the other at a considerable angle to

Copyright, 1901, by THE COLLIERY ENGINEER COMPANY.
Entered at Stationers' Hall, London.
All rights reserved.

the center line of the work, how would you set a universal grinding machine so as to produce both tapers ?

(12) Describe the set-wheel method of grinding and give its advantages.

(13) What are some of the benefits to be derived from the use of rests for the work while grinding ?

(14) Is it necessary to spot the work or to grind it true at a point where a rest is to be applied ?

(15) What is the difference between a fixed and a flexible rest ?

(16) Why is it necessary to apply greater pressure to a wheel doing internal grinding than to a wheel doing external grinding ?

(17) What forms of chucks are used on the grinding machines, and what advantages has each ?

(18) What precautions must be observed in selecting wheels for surface grinding ?

(19) What precautions must be observed in relation to the direction of rotation of the emery wheel, the position of the tooth to be ground, and the guide finger of a cutter-grinding machine when grinding a cutter ?

(20) What is lapping and on what classes of work is it used ?

BENCH, VISE, AND FLOOR WORK.

(PART 1.)

(1) If you wanted a square for extremely accurate work, such as making jigs, what style would you purchase?

(2) What advantages has the adjustable square over one in which the blade is fixed?

(3) (*a*) Describe the surface gauge. (*b*) For what is the surface gauge used?

(4) What three styles of hammers are used in machine-shop work, which is the most common, and what are the advantages of each?

(5) What tools are used for laying off circles upon work, both in the case of large and small circles?

(6) What advantage do wooden-framed calipers for large work possess over those having metal frames?

(7) What is (*a*) a hack saw? (*b*) For what is it used? (*c*) Why is it that longer hack-saw blades can be used in a power-driven hack saw than in the hand hack saw?

(8) What are plumb-bobs and for what are they used?

(9) (*a*) What is a spirit level? (*b*) What is the difference between a ground level glass and a bent level glass? (*c*) What are the relative advantages of each?

(10) What is a hydrostatic level and what are its advantages?

Copyright, 1901, by THE COLLIERY ENGINEER COMPANY.
Entered at Stationers' Hall, London.
All rights reserved.

(11) (*a*) What is a vise? (*b*) What classes of vises are commonly used in the machine shop? (*c*) What are the advantages of each?

(12) How is work protected from the jaws of the vise when operating on thin or polished work?

(13) What is a reaming stand and why is it more convenient than a vise for holding work for hand reaming?

(14) What are some of the characteristics of a good work bench intended to be located permanently?

(15) Describe one form of portable bench, and give the advantages of portable benches.

(16) Name six chisels commonly met with in the shop and give their uses.

(17) Describe briefly the process of chipping a large, flat surface.

(18) (*a*) What advantages did hand-cut files formerly have over machine-cut files? (*b*) How are machine-cut files now arranged to enable them to give as good results as can be obtained with hand-cut files?

(19) What is meant by a *double-cut* file?

(20) Does the coarseness of cut of a file indicate a certain tooth in all lengths of files of that class, or does it simply designate a certain size tooth in a certain length of file of that class; as, for instance, are the teeth in all bastard files of the same size, or are the teeth in the longer bastard files coarser than those in the short ones?

BENCH, VISE, AND FLOOR WORK.

(PART 2.)

(1) In the case of a flat file, is the face a plane, and if not, what form is it, and why is this form used?

(2) For filing flat surfaces where the entire file will have to pass over the surface, what style of handle is used?

(3) What is meant by the term *cross-filing?*

(4) How does draw-filing differ from cross-filing, and when is draw-filing used?

(5) Should pressure be exerted upon the file during both the forward and the backward stroke, and if not, during what stroke should it be exerted?

(6) In filing a round hole, or in using a half-round file upon a curved surface, how should the file be used to produce as perfect a curve as possible?

(7) What is meant by the term "safe edge" as used in connection with a file?

(8) At what height should the work be held for filing?

(9) What effect has oil on the action of a file?

(10) How is a file cleaned when the teeth become obstructed with dirt?

(11) For what are scrapers used?

(12) Name and describe the two classes of scrapers used for finishing flat surfaces.

(13) Describe the process of finishing a flat surface by means of a scraper and surface plate.

Copyright, 1901, by THE COLLIERY ENGINEER COMPANY.
Entered at Stationers' Hall, London.
All rights reserved.

(14) What advantage has vertical reaming over horizontal reaming?

(15) How many taps are necessary for carrying the thread to the bottom of a hole?

(16) What methods can be used for making sure that a hole is tapped perpendicular to the surface in which it is located?

(17) What is the angle of offset that should be given a wrench intended to turn hexagonal nuts?

(18) What advantages have ratchet wrenches over straight or offset wrenches?

(19) Describe the process of cutting off and threading pipe, naming the various tools used, and stating how they work.

(20) In the case of rectangular keys, what provision is made for withdrawing the key when it is so located that it is impossible to drive it out of the keyway?

(21) What is meant by the term *broaching?*

(22) Describe the broaching of a keyway and tell what tools are necessary, illustrating by sketch.

(23) What is meant by *laying out work*, and what are the advantages of having this work done by men especially set aside for the purpose?

(24) How may the center of a circle be located when it does not lie on the surface of a casting, as, for instance, the center of a bolt circle in the end of a cylinder or pipe casting?

(25) For what class of work is a portable laying-out plate that can be supported upon trestles suitable, and what advantages has this plate?

(26) When it is necessary to lay out heavy work, how should the laying-out plate be arranged and supported?

(27) What is the advantage of having a revolving top on a laying-out plate intended for light work?

BENCH, VISE, AND FLOOR WORK.

(PART 3.)

(1) What is blocking, and what are the most common forms used?

(2) In designing and making a set of rectangular iron blocks, why is it advantageous to have blocks of the same size planed to exactly the same dimensions, and what relation should there be between the dimensions of the blocks of different sizes?

(3) For what are adjustable parallels used, and how should they be made?

(4) What are jacks, and what are some of the principal kinds of jacks used in the machine shop?

(5) Name the principal kinds of erecting floors used, and give the advantages of each.

(6) If you had a standard line of machinery to build that had parts projecting below the general line of the base, what provision would you make on your erecting floor to facilitate the erecting of this machinery?

(7) Describe the process of erecting and turning the face of large flywheels or rope wheels.

(8) How may very large spur gears be cut?

(9) What is meant by the term *driving fit?*

(10) What is meant by the term *pressed fit*, and what classes of pressed fits are there?

(11) What is a *shrink fit?*

Copyright, 1901, by THE COLLIERY ENGINEER COMPANY.
Entered at Stationers' Hall, London.
All rights reserved.

(12) Describe the process of shrinking a crank on to a shaft, and state how the keyway in the shaft and the crank may be made to coincide.

(13) Describe the ordinary block and tackle, and state how the blocks of a handy tackle should be placed for hoisting and how they should be placed when heaving or moving work horizontally.

(14) Describe the ordinary differential chain block.

(15) What is a pneumatic hoist, and what advantages has it?

(16) Under what circumstances would you use a jib crane?

(17) What are the advantages of the trolley system of transporting work, and under what circumstances would you use it?

(18) What are the advantages of the traveling-crane system, and under what circumstances would you use it?

(19) How may the head- and foot-blocks of a lathe be brought into alinement with each other and with the bed?

(20) How may the carriage or saddle of a lathe be brought square with the head?

BENCH, VISE, AND FLOOR WORK.

(PART 4.)

(1) Into what classes may planers be divided?

(2) Describe one method of leveling up the bed of a large planer.

(3) Describe the device used for measuring between the housings in setting them parallel when erecting a large planer.

(4) How is the cross-rail of a planer set so as to plane parallel to the ways?

(5) How are the heads of a planer set so that when the graduations are set at zero, the head will face a surface down so as to make it at right angles to the surface of the table?

(6) Describe fully a method for erecting a large planer upon its foundation.

(7) Why is it that all machine work on a milling machine cannot be done before the fitting and erection are begun?

(8) What work should be done on a horizontal-engine bed before it is taken to the erecting floor?

(9) Describe a method for fitting the cylinder to the guides of an engine, including the method of centering the various parts by means of a line.

(10) How may the cylinder of an engine be brought into perfect alinement with the crosshead guides?

Copyright, 1901, by THE COLLIERY ENGINEER COMPANY.
Entered at Stationers' Hall, London.
All rights reserved.

(11) How may the crank-shaft be tested by means of lines to see whether it is at right angles to the center line of the engine, and also to see whether or not it is level?

(12) Describe the method of setting an engine on dead center, illustrating with a sketch.

(13) (*a*) What is a foundation-bolt templet? (*b*) For what is it used? (*c*) Is it sufficient to prepare the templet from the dimensions on the drawing, or should they be checked in any way?

(14) What appliances are necessary for erecting an engine on the foundation?

(15) Describe briefly the operation of erecting a horizontal engine on the foundation.

(16) In general, how does the erection of a vertical engine differ from the erection of a horizontal engine?

(17) When a locomotive is erected by placing the boiler first and fitting the other parts to it, how are the cylinders lined with the boiler?

(18) Describe the process of setting and securing the frames of a locomotive when the boiler is the first part placed upon the erecting floor.

(19) Describe the testing of a locomotive boiler, and tell why it is better to test the boiler by raising steam by means of fire in its own firebox than by introducing pressure from another boiler.

(20) Give the general order of procedure of erecting a locomotive when the boiler is not the first piece brought on to the erecting floor.

GENERAL HINTS ON SHOP PRACTICE.

(1) What is a lubricant, and what are the two purposes for which lubricants are used?

(2) What oil is used for cleaning bearings or for removing heavy grease?

(3) What is the objection to the use of animal oils for lubricating purposes?

(4) What kind of oil should be used for lubricating bearings or surfaces exposed to high temperatures, as, for instance, the inside of a steam-engine cylinder?

(5) In the case of bearings intended to resist very heavy pressure, but where the running speed is comparatively slow, as in the case of rolling-mill rolls, what kind of lubricant should be used?

(6) If a bearing commenced to heat on a machine that it was inconvenient to stop, how would you proceed to reduce the temperature of the bearing?

(7) How should oily and greasy material, such as waste, etc., be taken care of?

(8) What lubricants are used for carrying away heat, and what lubricants are best to use when cutting the different metals?

(9) Where it is not desirable to use an expensive oil for lubricating cutting tools on machines, what may be used as a substitute?

Copyright, 1901, by THE COLLIERY ENGINEER COMPANY.
Entered at Stationers' Hall, London.
All rights reserved.

(10) How may oil be separated from chips, and how may any fine dirt in the oil be separated?

(11) What may be used to protect steam pipes, steam cylinders, etc., and to prevent the radiation of heat?

(12) If a shop is not provided with a hydraulic press, how may the large parts be driven together or apart?

(13) What is a soda kettle, and for what is it used?

(14) What is the difference in the action of sulphuric and hydrofluoric acid when used for pickling solutions?

(15) What precaution should be observed in handling hydrofluoric acid?

(16) What are the advantages of keeping tools in racks or specially prepared cupboards or cases?

(17) What may be learned from observing the material that goes into the scrap heap?

(18) What is a gin pole, and for what is it used?

(19) Describe the erection of a derrick.

(20) What material is necessary for handling work in the field when erecting heavy machinery?

TOOLMAKING.

(PART 1.)

---

(1) What are the several stages in the production of a tool?

(2) What is the primary object of tool improvement?

(3) In constructing a tool, the purpose and the accuracy required for each integral part must be studied; why?

(4) How does a toolmaker read decimals? Give an example.

(5) What instruments are sufficient for approximate measurements, and what ones must be used for precise measurements?

(6) What is generally regarded as the limit of accuracy of ordinary contact measurements?

(7) What general rule should be observed to reduce accumulation of errors in measurements?

(8) What are the limitations of toolmaking?

(9) What is the purpose of a *lathe indicator?*

(10) On what principle is a lathe indicator constructed?

(11) What is a center indicator, and for what is it used?

(12) How many flutes are commonly cut on taps?

Copyright, 1901, by THE COLLIERY ENGINEER COMPANY.
Entered at Stationers' Hall, London.
All rights reserved.

(13) Point out the relative advantages of the three forms of flutes shown in Fig. 7 (*a*) and (*b*) and Fig. 8 of the Instruction Paper.

(14) What is the proper procedure in constructing a hand tap?

(15) What is the effect of cutting the thread of a tap with a die?

(16) What precaution would you use in hardening a tap?

(17) What is the effect of hardening in most instances?

(18) Why can machine taps be made more efficient than hand taps?

(19) What are the points to be observed in making a *taper tap?*

(20) What are the errors produced by cutting the thread of a taper tap by setting over the tailstock center instead of using a taper attachment, as should be done?

(21) How should the threading tool be set in threading a taper tap?

(22) What is a hob?

(23) What is the effect of cutting an adjustable die with a hob larger than the screw to be cut with it?

(24) How should a *chaser hob* be made?

(25) When should *adjustable taps* be used?

(26) What precaution must be observed in making *multiple-threaded* taps intended to cut a full thread in one passage?

(27) (*a*) What is a *collapsing tap?* (*b*) What is it used for?

(28) Describe in general the operation of a releasing tap holder.

TOOLMAKING.

(PART 2.)

---

(1) In what cases must the number of cutting edges for a die be more than four ?

(2) How are the sizes of screw-cutting dies designated ?

(3) What is to be said of the *rake* of the cutting edges for screw-cutting dies ?

(4) Describe the procedure of making a *solid die.*

(5) What advantages are gained by making dies with inserted blades ?

(6) In designing a releasing die holder, such as shown in Fig. 6 of the Instruction Paper, how would the helical groove be located ?

(7) What are reamers intended for ?

(8) What are the causes that induce chattering of a reamer ?

(9) What is the objection to the method of spacing the cutting edges illustrated in Fig. 7 of the Instruction Paper ?

(10) How many cutting edges would you give to a 1¼-inch reamer ?

(11) Is it advantageous to give negative rake to the cutting edges of reamers, and why ?

Copyright, 1901, by THE COLLIERY ENGINEER COMPANY.
Entered at Stationers' Hall, London.
All rights reserved.

(12) Upon what considerations chiefly depends the amount of relief or clearance to be given to a reamer ?

(13) What is to be said about helical cutting edges for reamers ?

(14) How much allowance for grinding should be provided for a 1-inch reamer 6 inches long ?

(15) What precautions must be taken in grinding reamers ?

(16) In what way is the cutting of a *stepped reamer* different from that of an ordinary tapered reamer ?

(17) How can a worn solid reamer be restored to size ?

(18) What is the objection to *split expanding reamers ?*

(19) What are the objections to *solid counterbores ?*

(20) How may the objections to solid counterbores be overcome ?

(21) What is the chief advantage of inserted-cutter counterbores, and what are the objections to them ?

(22) How is a solid hollow mill constructed ?

TOOLMAKING.

(PART 8.)

---

(1) How many cutting edges would you give to a 4-inch solid milling cutter? What should the width of the lands and the clearance be?

(2) How should milling cutters be ground? What precaution should be taken?

(3) Define the terms *left-handed* and *right-handed* milling cutters; left-handed and right-handed helixes.

(4) What advantage is gained by *nicking* the teeth of milling cutters?

(5) What is the objection to inclined straight inserted teeth in a milling cutter?

(6) How may the objection mentioned in question 5 be overcome?

(7) What is meant by the *pitch* of a milling cutter?

(8) Outline the procedure of making a *fly cutter*.

(9) What is the characteristic feature of formed cutters?

(10) Define the terms *pitch* and *lead* of a worm.

(11) What is the outside and inside diameter of a worm-wheel hob when the worm is to have a pitch equal to $\frac{1}{2}$ inch and an outside diameter of $2\frac{1}{2}$ inches?

Ans. 2.55″ and 1.8134″.

Copyright, 1901, by THE COLLIERY ENGINEER COMPANY.
Entered at Stationers' Hall, London.
All rights reserved.

(12) Find graphically the side clearance for the forming tool for the hob designated in question 11.

(13) Give the width and number of slots for the hob designated in question 11.

Ans. { .205″. 8 slots.

(14) Define the terms *reference gauges* and *working gauges*, *definite* and *limit gauges*.

(15) What is considered the limit of accuracy attainable by the use of a good micrometer?

(16) What is to be said about accuracy for gauge work in general?

(17) What material is mostly used for gauges? What is meant by *seasoning?*

(18) In making a plug gauge, why is a small extra cylindrical piece necked off at the end, as shown in Fig. 13 of the Instruction Paper?

(19) How may large plug gauges be made?

(20) Give convenient proportions for a $1\frac{1}{2}$ plug and a $1\frac{1}{2}$ ring gauge.

Ans. { Length of cyl. part of plug, 3.1″. Length of handle, 2.25″. Diameter of handle, .95″. Height of ring gauge, 1.65″. Diameter of ring gauge, 3.8″.

(21) What are the advantages of a *snap gauge* over a ring gauge?

(22) Describe the making of a snap gauge.

(23) How is *crowning* prevented in lapping a male snap gauge having parallel measuring surfaces?

TOOLMAKING.

(PART 4.)

(1) Lay out an angle of 50° by the aid of tangents.

(2) Lay out an angle of 118° by the aid of tangents.

(3) Lay out on paper a taper of $2\frac{1}{2}$ inches per foot measured according to Fig. 4 (*b*) of the Instruction Paper. The length of the taper is to be 3 inches and the width at the large end $1\frac{1}{4}$ inches.

(4) In originating a taper two disks $1\frac{3}{4}$ and $2\frac{1}{4}$ inches in diameter are used. When placed at a distance of 3 inches from center to center, what is the taper in inches per foot if measured in accordance with Fig. 4 (*d*) of the Instruction Paper? Ans. 2.0083 inches per foot.

(5) The distance between centers of two disks used in originating an angle is 4 inches; the disks are 1 inch and $1\frac{3}{4}$ inches in diameter. What is the taper expressed in inches per foot according to Fig. 4 (*b*) of the Instruction Paper?

Ans. 1.1273 inches per foot.

(6) The two disks used for originating an angle measure $1\frac{1}{8}$ and 2 inches; the distance between centers is $3\frac{1}{2}$ inches. What is the taper in inches per foot measured according to Fig. 4 (*c*) of the Instruction Paper?

Ans. 3.0737 inches per foot.

Copyright, 1901, by THE COLLIERY ENGINEER COMPANY.
Entered at Stationers' Hall, London.
All rights reserved.

(7) A taper of 1 inch per foot is to be originated, measured according to Fig. 4 (*a*) or (*d*) of the Instruction Paper. The disks used are $1\frac{1}{2}$ and $1\frac{3}{4}$ inches in diameter. What distance from center to center must the disks be placed apart? Ans. 3.0055″.

(8) A taper of 1 inch per foot is to be measured according to Fig. 4 (*b*) of the Instruction Paper. What must the center-to-center distance of the disks be, if their diameters are 1 inch and 2 inches, respectively? Ans. 6.0168″.

(9) A taper of $2\frac{1}{2}$ inches per foot is to be originated with the aid of two disks having diameters of 2 and 3 inches. What distance, measured from center to center, must the disks be placed apart, if the taper is to be measured according to Fig. 4 (*c*) of the Instruction Paper? Ans. 4.8781″.

(10) A certain gauge has a taper of $1\frac{1}{2}$ inches per foot measured according to Fig. 4 (*a*) of the Instruction Paper. What angle do the sides of the gauge include? Ans. 7° 10′.

(11) If the taper of the gauge in the previous question is measured according to Fig. 4 (*b*) of the Instruction Paper, what angle do the sides of the gauge include?

Ans. 14° 14′.

(12) If the taper of the same gauge is measured according to Fig. 4 (*c*) of the Instruction Paper, what angles do its sides include? Ans. 7° 7′.

(13) Two straightedges are to be set to an angle of 10° by means of a pair of disks 2 and 3 inches in diameter. What must their center-to-center distance be?

Ans. 5.7366″.

(14) Two straightedges are placed against two disks having diameters of $2\frac{1}{4}$ and 3 inches, and placed 5 inches apart from center to center. What is the angle included by the straightedges? Ans. 8° 36′.

(15) What is the principle made use of in originating a 60° angle?

(16) Describe a method of testing try squares.

(17) How may straightedges be originated ?

(18) In a pin gauge for gauging the center-to-center distance of two holes, why must the pins be made smaller than the least permissible diameter of the holes ?

(19) How can the limit of variation in the center-to-center distance of a pin gauge be reduced ?

(20) Describe a method of dividing a circle by mechanical correction of errors.

(21) Find the center-to-center distance of two adjoining holes of 20 located on a circle 5 inches in diameter.

Ans. .7822″.

(22) On what principle is the method of dividing a circle by correcting the accumulated error based ?

(23) Describe a method of dividing a straight line mechanically.

TOOLMAKING.

(PART 5.)

---

(1) Which are the essential parts of a *die block?*

(2) Which are the essential parts of a *punch?*

(3) What precaution must be observed in planning a *multiple* die?

(4) In a gauge die the stripper is usually fitted to the punch; why?

(5) What is the objection to a gauge die such as shown in Fig. 3 of the Instruction Paper?

(6) What is the objection to a plain gang die such as shown in Fig. 4 of the Instruction Paper?

(7) What is the difference between a compound die and a plain or gang die?

(8) When is a compound die to be used?

(9) How may a die be laid out?

(10) How much stock should as a rule be left between two adjoining punched holes?

(11) What is a *profiling templet* and when is it used?

(12) What is to be said about hardening and tempering die blocks?

Copyright, 1901, by THE COLLIERY ENGINEER COMPANY.
Entered at Stationers' Hall, London.
All rights reserved.

(13) What is meant by giving *shear* to a die, and what is the object in doing so?

(14) Suppose that it has been decided to give shear to a circular die and that the disks punched out are the scrap; to which would you give the shear, the die block or the punch?

(15) What is understood by the term *bending?*

(16) What is understood by the term *forming?*

(17) What is understood by the term *drawing?*

(18) What is understood by the term *embossing?*

(19) What is understood by the term *redrawing?*

(20) What is understood by the term *curling?*

(21) Will a piece of work bent by a bending die have the exact form of the die?

(22) What is a *plain forming die?*

(23) What is the object of the *blank holder* in a forming die?

(24) What is essential to successful drawing?

TOOLMAKING.

(PART 6.)

---

(1) What is meant by a *jig?*

(2) What are the essential parts of a jig?

(3) What is the difference between a *clamp jig* and a *box jig?*

(4) Name some of the general requirements of a jig in relation to the saving of time.

(5) Name some requirements of a jig in relation to exactness of work.

(6) What is the objection to plain bushings in jigs?

(7) What can be said against straight bushings tapered on the outside?

(8) What depth of bushing is considered sufficient to guide the cutting tool properly?

(9) What is the objection to tapered removable bushings?

(10) What is the advantage of tapered removable bushings?

(11) What is a *clamp bushing?*

(12) What is to be observed in determining the size of guide holes in jigs?

Copyright, 1901, by THE COLLIERY ENGINEER COMPANY.
Entered at Stationers' Hall, London.
All rights reserved.

(13) For what purposes are the clamping devices provided in jigs ?

(14) What are the commendable features of the jig shown in Fig. 17 of the Instruction Paper ?

(15) What is considered the limit of accuracy attainable in the location of holes when they are put in by drilling and reaming in a drill press ?

(16) What are the causes of the low accuracy attainable in locating holes by means of steel rule, scriber, etc. and subsequent drilling and reaming ?

(17) Describe shortly the various steps to be taken successively in locating holes by the button method.

(18) Describe a method of locating holes in a jig from a model, the holes being through holes.

(19) How does one proceed if the holes in the work or model are blind ?

(20) If the jig is too large to be swung in the lathe, how may the pilot holes be made to aline with the holes in the model ?

A KEY

TO THE

EXAMPLES

INCLUDED IN THE

QUESTION PAPERS IN THIS VOLUME.

It will be noticed that the Keys have been given the same section numbers as the Question Papers to which they refer. All article references refer to the Instruction Paper bearing the same section number as the Key in which it occurs, unless another "Part" or the title of some other Instruction Paper is given in connection with the article number. Answers have been given only to those questions which require an arithmetical calculation.

ANSWERS TO QUESTIONS

IN THIS VOLUME

REQUIRING NUMERICAL CALCULATIONS.

TOOLMAKING.

PART 3.

(11) By Art. **20,** the outside diameter of the hob is

$$2\tfrac{1}{2} + \tfrac{1}{10} \times \tfrac{1}{2} = 2.5 + .05 = 2.55'', \quad \text{Ans.}$$

and the inside diameter is

$$2.5 - [2 \times .6866 \times .5] = 1.8134''. \quad \text{Ans.}$$

(13) By Art. **23,** the width of the slots is

$$.17 \times .5 + .12 = .085 + .12 = .205. \quad \text{Ans.}$$

The number of the slots is

$$\frac{1.8134 \times 3.1416}{.6866 \times .5 + .12 + .25} = \frac{5.6969}{.713} = 7.9, \text{ or } 8 \text{ slots approx.}$$

Ans.

(20) By Art. **39,**

Length of cylindrical part of plug	$= 1.8 \times 1.5 + .4'' = 3.1''$	Ans.
Length of handle	$= .5 \times 1.5 + .5'' = 2.25''$	
Diameter of handle	$= .5 \times 1.5 + .2'' = .95''$	
Height of ring gauge	$= .9 \times 1.5 + .3'' = 1.65''$	
Diameter of ring gauge	$= 2.2 \times 1.5 + .5'' = 3.8''$	

In practice the handle would be made 1 inch in diameter in place of .95 inch.

PART 4.

(4) By rule, Art. **10,**

Difference in diameters of disks $= 2\frac{1}{4} - 1\frac{3}{4} = \frac{1}{2}$ inch. $\frac{1}{2} \div 2 \times 3 = \frac{1}{12} = .08333$; from a table of natural sines the corresponding angle is found to be 4° 47′. The natural tangent belonging to this angle is .08368, which multiplied by 24 gives a taper equal to

$$.08368 \times 24 = 2.0083 \text{ inches per foot.} \quad \text{Ans.}$$

(5) By rule, Art. **10,**

Difference in diameters of disks is $\frac{3}{4}$ inch. $\frac{3}{4} \div 2 \times 4 = \frac{3}{32} = .09375$; from a table of natural sines the corresponding angle is found to be 5° 22′, whose tangent is .09394, which multiplied by 24 and divided by 2 gives a taper of

$$.09394 \times \tfrac{24}{2} = .09394 \times 12 = 1.1273 \text{ inches per foot.} \quad \text{Ans.}$$

(6) By rule, Art. **11,**

Difference in diameters of disks is $\frac{7}{8}$ inch. $\frac{7}{8} \div 2 \times 3\frac{1}{2} = \frac{7}{56} = \frac{1}{8} = .125$. From a table of sines the corresponding angle is found to be 7° 11′; the tangent of double this angle, or 14° 22′, is .25614, which multiplied by 12 gives a taper equal to

$$.25614 \times 12 = 3.0737 \text{ inches per foot.} \quad \text{Ans.}$$

(7) According to rule, Art. **12,**

$\frac{1}{24} = .04167$. From a table of natural tangents the corresponding angle is found to be 2° 23′, whose sine is .04159, so that the distance between centers is

$$\frac{1\frac{3}{4} - 1\frac{1}{2}}{2 \times .04159} = \frac{.25}{.08318} = 3.0055 \text{ inches.} \quad \text{Ans.}$$

(8) According to rule, Art. **12,**

$\frac{1}{12} = .08333$. From a table of natural tangents the corresponding angle is found to be 4° 46′, whose sine is .08310, so that the distance between centers must be

$$\frac{2 - 1}{2 \times .0831} = \frac{1}{.1662} = 6.0168 \text{ inches.} \quad \text{Ans.}$$

(9) According to rule, Art. **13,**

$\frac{2.5}{12} = .20833$. From a table of natural tangents the corresponding angle is found to be 11° 46′. The natural sine corresponding to half this angle, or 5° 53′, is .1025, so that the distance between centers is

$$\frac{3-2}{2 \times .1025} = \frac{1}{.205} = 4.8781 \text{ inches.} \quad \text{Ans.}$$

(10) According to rule, Art. **14,**

$\frac{1\frac{1}{2}}{24} = \frac{3}{48} = \frac{1}{16} = .0625$. From a table of natural tangents the corresponding angle is found to be 3° 35′, so that the angle between the sides of the gauge is 7° 10′. Ans.

(11) By rule, Art. **15,**

$\frac{1\frac{1}{2}}{12} = \frac{3}{24} = \frac{1}{8} = .125$. A table of tangents gives 7° 7′ as the corresponding angle, so that the angle between the sides of the gauge is 14° 14′. Ans.

(12) By rule, Art. **16,**

$\frac{1\frac{1}{2}}{12} = .125$. A table of tangents gives 7° 7′ as the angle corresponding to this tangent, which is the angle included between the sides. Ans.

(13) By rule, Art. **17,**

The sine of half the given angle, or 5°, is .08716, so that the center-to-center distance is

$$\frac{3-2}{2 \times .08716} = \frac{1}{.17432} = 5.7366''. \quad \text{Ans.}$$

(14) By rule, Art. **18,**

$\frac{3-2\frac{1}{4}}{2 \times 5} = \frac{3}{40} = .075$. From a table of tangents the corresponding angle is found to be 4° 18′, so that the angle included between the straightedges is 8° 36′. Ans.

(21) By rule, Art. **50,**

$\frac{360}{2 \times 20} = 9°$; the sine of this angle is .15643, which multiplied by the diameter of the circle gives the distance between centers of two adjoining holes as $.15643 \times 5 = .7822''$. Ans.

INDEX.

NOTE.—All items in this index refer first to the section (see Preface, Vol. I) and then to the page of the section. Thus, "Blocking 22 1" means that blocking will be found on page 1 of section 22.

A.	Sec.	Page.
Abrasive materials	18	7
Abrasives, Artificial	18	10
Accuracy attainable in gauge work	27	24
" in gauge work, Needless	27	26
Adjustable dies	26	6
" " Inserted-blade	26	8
" reamers	26	28
" square	20	3
" taps, Design of	25	30
" " Examples of	25	30
Albany grease	24	3
Allowances for different fits	22	35
Angle of broach teeth	21	52
" Originating a 60°	28	11
Angles, Originating	28	7
Angular gauges	28	1
" " Laying out angles of	28	2
" " Names of	28	1
Approximate measurements	25	8
Artificial abrasives	18	10
" grindstones	18	6
Assembling a large rope wheel	22	27
Automatic cross-feed	18	52
" truing device for grindstone	18	3

B.	Sec.	Page.
Babbitt metal, Lubricant for cutting	24	9
Backing-off attachment for cutters	27	11
Backing off, Methods of, in cutter and reamer grinding	19	59
Back or fixed rest for grinding	19	28
" rest, Universal, for grinding	19	30
Bars, Pinch	24	30
Bath indicator	24	13
Bearings, Curing hot	24	4
Bell chuck	19	44
Belt polishing machine	18	22
Belts, Polishing	18	20
Bench, Cast-iron	20	30
" centers	20	10
" Post	20	31
" vise, and floor work	20	1
" with cast-iron frame	20	29
" work and laying out	20	2
" " Tools and fixtures used in	20	2
Benches, General arrangement of	20	28
" Portable	20	30
Bends, knots, and hitches	24	38
Benzine	24	2
Bevel, Combination	20	5
" protractor	20	3
Black diamond	19	68
" lead	24	4
Blackening iron and steel	24	46
Blackwall hitch	24	38
Blanks, Size of, for forming and drawing	29	43
Block and tackle	22	39
Blocks, Adjustable parallel	22	5
" Parallel	22	3
Blocking	22	1
" Cylindrical iron	22	40
" Iron	22	3

	Sec.	Page.
Blocking, Rectangular iron....	22	3
" Wooden.....	22	2
Bluing iron and steel.....	24	46
Boiler, Placing a locomotive. .	23	35
" Testing a locomotive..	23	43
Bolt holes, Laying out, in pipe flanges.....	21	69
" templet, Foundation.....	22	14
Bonds for emery wheels.....	18	11
Boring lathe parts	22	48
" milling-machine column	23	13
Bowline knot.....	24	40
Box jigs.....	30	2
Boxes, pans, and trays...	24	19
Breast drill.....	21	44
Brick and concrete floors.....	22	17
British classification of files...	20	49
Broach, Simple square.....	21	47
" teeth, Angle of.....	21	52
Broaches, Lubrication of.....	21	52
" Use of several, in a set.....	21	48
Broaching keyways.....	21	50
" machine.....	21	51
" or drifting, Consideration of.....	21	47
Brown & Sharpe indicator.....	24	16
Browning iron and steel chemically.....	24	47
Brush wheels.....	18	24
Buffing and polishing, Distinction between.....	18	22
" Applications of.....	18	23
" Polishing material used in.....	18	23
" wheel mount.....	18	24
" wheels	18	22
Built-up counter bores.....	26	37
Bushing, Facing a, by grinding	19	18
Bushings, Clamp.....	30	10
" Guide.....	30	6
" Grinding	30	12
" Material for.....	30	12
" Permanent, for jigs	30	6
" Removable, for jigs	30	8

C.	Sec.	Page.
Cabinets for keeping tools.....	24	23
Caliper gauge, Grinding a.....	19	22
" Wooden	20	14
Calipers	20	12
" Hermaphrodite.....	20	16
" Micrometer	20	13
" Precautions in setting large.....	20	16
" Vernier.....	20	13
Cam for formed cutter.....	27	16
Cape chisel.....	20	33
Carborundum	18	10
Cast-iron bench	20	30
" plate erecting floors.	22	18
Castings, Precautions necessary in machining.....	23	3
Catspaw hitch.....	24	40
Celluloid emery wheels.....	18	13
Center and prick punches.....	20	8
" indicator.....	25	18
" square.....	20	5
Centers, Bench..	20	10
" Truing the, of a grinding machine..	19	24
Chain block, Differential.....	22	40
" blocks.....	22	39
" hoists.....	24	33
Chatter marks	19	9
Chattering of reamers.....	26	12
Chipping.....	20	34
" Cutting keyways by.	20	37
" Examples of.....	20	36
" Holding the hammer and chisel in.....	20	35
" key seats.....	20	36
" large flat surfaces....	20	38
" Lettering bottle molds by...	20	41
" strip.....	20	39
Chisel, Cape	20	33
" Diamond-pointed	20	33
" Flat.....	20	32
" Gouge.....	20	33
" Grooving.....	20	34
" Side.....	20	34
Chisels for pneumatic hammer	20	34
Chuck work on a grinding machine.....	19	24
Chucks for use on grinding machines.....	19	44
" Special, for grinding machine.....	19	25
Chucking reamers for roughing	26	27
Circle, Division of a.....	28	29
" Laying off subdivisions of a.....	21	59
Circles and lines, Integral divisions of.....	28	29
" Locating centers of...	21	58
" Subdividing.....	21	58
" Table for dividing....	21	60
Clamp bushings.....	30	10
" dog	20	26
" jigs...	30	2
Clamping and holding devices	20	23
" devices	30	12

	Sec.	Page.
Clearance given to tools in grinding	19	62
" of reamers	26	15
Coatings on which to make lines	21	55
Cold chisels	20	32
Collapsing tap, Design of	25	34
" taps	25	33
Combination emery wheel	19	4
Compound die	29	9
" dies	29	1
Compressed air for cleaning	24	19
Concrete tar foundation for erecting floor	22	16
Conical grinding	18	42
Construction, Cost of	24	25
Corundum, Composition of, and where found.	18	7
" Grading, and meaning of numbers used	18	9
" Properties of	18	8
Counterbores	26	35
" Built-up	26	37
" Inserted-cutter	26	38
" " teat	26	37
" Solid	26	35
Crane, Electric traveling	22	45
" Power traveling	22	44
Cranes	22	41
" Hand traveling	22	43
" Jib	22	41
" Trolley system	22	42
Crank-arm, Laying out a	21	71
" Sectional key for use while shrinking	24	20
" shaft and bearings, Testing	23	22
" shaft, Fitting the	23	22
Cross-feed, Automatic	18	52
Crosshead, Laying out a	21	72
Cupboards for keeping tools	24	23
Cup wheel, Use of, for cutter grinding	19	55
Curling dies	29	47
Cutter and reamer grinding	19	47
" " " "	19	50
" grinding in universal grinding machine	19	57
" grinding, Precautions in	19	52
Cutters, Backing-off attachment for	27	11
" Fly	27	9
" Grinding, in place	19	63
" Grinding shank and angular	19	53
Cutters, Making cam for formed	27	16
" Milling	27	1
" " Backing-off attachment for	27	11
" " Formed	27	10
" " Grinding teeth of	19	55
" " with inserted teeth	27	5
" Number of cutting edges for solid milling	27	1
" Sharpening formed	19	61
Cutting and drawing die, Combined	29	33
" " fitting sheet lagging	24	10
" dies	29	1
" " Classification of.	29	1
" " Drawing and embossing	29	40
" edges for milling cutters, Table of,	27	1
" " Helical	26	17
" " Helical, for milling cutters	27	4
" " Number of, on reamer	26	13
" " of reamers, Spacing of	26	12
" soft rubber	24	45
" tools and appliances	25	21
" " " "	26	1
Cylinder oil	24	3
Cylinders, Placing of locomotive	23	38
Cylindrical grinding	18	42

D.

	Sec.	Page.
Dashpots, Fitting the, of a horizontal engine	23	23
Dead center, Placing the engine on	23	25
Decimals, Reading	25	6
" Rule for	25	6
Derrick, Dismantling	24	45
" Erection of	24	40
Design and use of hobs	25	28
" in toolmaking	25	2
" of collapsing tap	25	34
Designing worm-wheel hobs	27	20
Diamond tools, Lapping	19	68
Die block	29	1
" " Hardening and tempering a	29	21

	Sec.	Page.
Die block, Making the	29	18
" Compound	29	9
" Gang	29	7
" holders	26	9
" Laying out a compound	29	18
" " " " gang	29	15
" " " " plain	29	14
" making	29	1
" Making a solid	26	2
" " the	29	18
" Multiple	29	3
" Plain	29	2
" " gang	29	7
" Self-centering	29	2
" " gang	29	9
" sinking	20	41
" Spring drawing	29	34
" stock and round dies	21	34
" " " square dies	21	33
Dies, Adjustable	26	6
" Bending	29	26
" Combined cutting and drawing	29	33
" Combined cutting, drawing, and embossing	29	40
" Compound	29	1
" Curling	29	47
" Drawing	29	31
" Filing templet for	29	19
" Fit of	29	23
" Forming	29	26
" "	29	29
" for thread cutting	26	1
" Gang	29	1
" Giving clearance to	29	21
" Inserted-blade	26	4
" " Adjustable.	26	8
" Laying out	29	12
" Non-adjustable	26	2
" Number of cutting edges of	26	1
" Plain	29	1
" " drawing	29	31
" " embossing	29	39
" Position of the gauge pin of	20	14
" Rake of cutting edges on	26	2
" Redrawing	29	45
" Shaping	29	26
" Spring	26	6
" Table for number of cutting edges of	26	2
Differential chain block	22	40
Dimensioning drawings	25	4
Disk grinders	18	30
Dividers and trammels	20	11
Dividing a circle by assembly of equal pieces	28	36
Dividing a circle by chord measurements	28	34
Dividing a circle by contact measurements	28	33
Dividing a circle by correcting the accumulated error	28	38
Dividing a circle by mechanical correction of errors	28	30
Division of circles and lines	28	29
" " lines	28	40
" " the circle	28	29
Dog, Clamp	20	26
Double hitch	24	38
Dowel-pins, Use of, in engine erection	23	25
Draw-filing	21	11
Drawers for keeping tools	24	23
Drawing	29	26
" and forming, Size of blank for	29	43
Drawings, Dimensioning	25	4
Drifting or broaching	21	47
Drill, Breast	21	44
" Crank-driven portable	21	44
" Scotch	21	44
Drilling ratchets, General consideration of	21	42
Drilling ratchets, Use of	21	42
" rawhide	24	9
Driving, press, and shrink fits	22	29
" work between centers while grinding	19	16

E.

	Sec.	Page.
Earth floors	22	15
Electric traveling crane	22	45
Embossing	29	27
" dies	29	39
Emery, Composition of, and where found	18	9
" Grade of, used in lapping	19	64
" Preparation of	18	10
" wheel, Celluloid	18	13
" " Combination	19	4
" " Parts of	18	11
" " Shellac	18	12
" " Silicate	18	12
" " Tannite	18	13
" " Truing device for	18	34
" " Use of term	18	11
" " Vitrified	18	12
" " Vulcanite	18	12

	Sec.	Page.
Emery wheels, Bonds for.....	18	11
" " Bushing.....	18	13
" " Classification of.....	18	11
" " Grading of....	18	15
" " Manufacture and use of..	18	11
" " Preparation of	18	13
Emery wheels, Table for selection of grades of.....	18	16
Emery wheels, Table of speeds of.....	18	18
" " Testing.....	18	17
" " Truing.....	18	14
" " "	19	10
Enclosed polishing wheel.....	18	21
Engine, Appliances for erecting, on the foundation.....	23	29
Engine bed, Laying out an.....	21	75
" cylinders, Lagging.....	23	25
" Dismantling a horizontal....	23	27
" " " vertical	23	34
" Erecting a horizontal, on foundation.....	23	28
" Erecting a vertical, on foundation.....	23	35
" Erecting a vertical stationary	23	31
" erection.....	23	17
" " Horizontal stationary	23	18
" foundation.....	23	28
" " Bolt templet for	23	28
" General consideration of valve setting.....	23	26
" Placing, on dead center	23	25
Erecting a gin pole.....	24	42
" "small derrick.....	24	44
" "vertical stationary engine	23	31
" floor, Brick and concrete	22	17
" " Cast-iron plate	22	18
" " Double-plank..	22	15
" " Earth.....	22	15
" " Single-plank...	22	15
" " Wooden-block.	22	17
" floors.....	22	14
" " Methods of building.....	22	14
" pit for high work....	22	29
" " Locomotive.....	23	45
" " Use of.....	22	25
Erection and inspection of lathes	22	48
Erection, Engine.....	23	17
" Locomotive.....	23	35
" Milling-machine.....	23	11
" of a derrick.....	24	40
" " " lathe.....	22	46
" " engine on foundation.....	23	28
" planer.....	23	1
Errors, Accumulation of.....	25	10
" Accumulation of, in measurements.....	25	10
" Reduction of accumulating.....	25	12
Expanding reamers.....	26	29
External grinding.....	18	41
" "	19	16
" " Wheels for	19	5
" lapping	19	65
Eye splice.....	24	34

F.	Sec.	Page.
Face-plate work on a grinding machine.....	19	24
File card.....	21	14
" handles, Special, for flat work.....	21	3
" " Wooden.....	21	3
" Holding the	21	4
" Using the	21	7
Files, Advantages of convex faces in.....	21	2
" and filing.....	20	41
" Bellied	20	43
" Blunt.....	20	44
" British classification of.	20	49
" Character of cut of	20	45
" Coarseness of cut of....	20	46
" Definition of terms.....	20	43
" Development of.....	20	42
" Distinguishing features of.....	20	45
" Double-cut.....	20	46
" Equaling.....	20	44
" Float	20	44
" Hand-cut	20	42
" Hopped	20	44
" Machine cut.....	20	42
" Middle-cut	20	44
" Recut.....	20	44
" Safe-edge.....	20	44
" Selecting and care of...	21	13
" Single-cut.....	20	45
" Sizes of	20	49
" Superfine-cut	20	45
" Table of characteristics of.....	20	48
" Taper.....	20	45

	Sec.	Page.
Files, Use of	21	1
Filing block	20	44
" circular holes	21	10
" Difficulties to contend with in	21	1
" Effect of oil on	21	12
" Purpose of	21	1
Filtering oil	24	7
Finger guide, Location of, in tool grinding	19	59
" " Mounting of, in tool grinding	19	57
Fits, Allowance for different	22	35
" Press	22	32
" " Precautions in making	22	31
" Shrink	22	36
" " Special heater for making	22	38
" Taper press	22	34
Flanges, Laying out bolt holes in	21	69
Flat chisel	20	33
Floor, Double-plank erecting	22	15
" pit, Special	22	23
" Single-plank erecting	22	15
" work	22	1
Floors, Brick and concrete for erecting	22	17
" Cast-iron plate for erecting	22	18
" Earth	22	15
" Erecting	22	14
" Wooden block for erecting	22	17
Flutes, Number of, for taps	24	21
Fly cutters	27	9
Flywheel, Assembling of, in erecting pit	22	25
" Fitting	23	24
Follower rests for use in grinding	19	28
Forced fit allowances, Table of	22	36
" fits	22	29
Formed cutters, Laying out cams for	27	14
" " Making cams for	27	14
" milling cutters	27	10
" reamers	26	33
Forming	29	26
Foundation-bolt templet	22	14
" bolt templet for engine	23	28
" bolts, Setting	23	29
Foundation bolts, Setting, for horizontal engine	23	29
Foundation, Securing planer to	23	9
" Setting engine on	23	30
" Tar concrete, for erecting floor	22	16
Foundations for horizontal engines	23	28
" Machine	23	13
Frames, Placing of locomotive	23	39

G.	Sec.	Page.
Gang die	29	7
" dies	29	1
Gauge, Grinding a caliper	19	22
" Laying out a taper	28	6
" making	27	28
" " the plug	27	28
" " " ring	27	30
" pin	29	1
" " Position of, in dies	29	14
" work, Accuracy attainable in	27	24
" " Limit of accuracy in	27	24
" " Needless accuracy in	27	26
" Scratch	20	7
Gauges, Angular	28	1
" Classification of	27	23
" Limit and definite	27	24
" Limit of variation for limit	27	34
" Making snap	27	39
" Master	27	23
" Material used for	27	26
" Names of angular	28	1
" Plug and ring	27	28
" Proportions of plug and ring	27	33
" Reference	27	23
" Snap	27	36
" " limit	27	38
" Special	28	23
" Surface	20	6
" Working	27	24
Gear-cutting, Large spur	22	20
General hints in shop practice	24	1
Gin pole, Erecting a	24	42
Gisholt tool-grinding machine	18	37
Glazing	18	26
" Causes of	19	3
Gouge	20	33
Governor, Fitting the, of a horizontal engine	23	23
Grade of emery used in lapping	19	64
" " stone required for thin work	18	3

	Sec.	Page.
Graduations, Purpose of, on grinding machines	19	14
Graphite	24	4
Grease	24	3
Greasy waste, Keeping	24	6
Grinder, Cutter, and reamer	19	48
Grinders, Disk	18	30
Grinding, Absorption of vibration in	19	33
" Advantages of	19	1
" Allowance for, in reamers	26	17
" Applications of	18	19
" a caliper gauge	19	22
" " cylindrical rod	19	18
" bushings	30	12
" centers	19	24
" chuck and face-plate work	19	24
" chucks	19	44
" Classes of machines used in	18	43
" Conical	18	42
" " work	19	21
" " "	19	41
" Cutter and reamer	19	47
" cutters in place	19	63
" Cylindrical	18	42
" Definition of	18	1
" Disk	18	42
" External	18	42
" face-plate work	19	45
" Fixed or back rest for	19	28
" Flexible rests for	19	29
" Follower rests for use in	19	28
" Grade of grindstone required for, thin work	18	3
" Hand	18	27
" " tool	18	30
" Influence of pressure on	19	37
" Influence of vibration while	19	4
" Internal	18	42
" "	19	37
" Machine	18	41
" machine, Adjustment of headstock of	19	15
" machine, Automatic cross-feed for	18	52
" machine, Construction of plain	18	43
" machine, Construction of universal	18	46
Grinding machine, Final adjustment of	19	15
" machine, Graduations on	19	14
" machine, Overhead arrangement for	18	51
" machine, Seller's tool	18	35
" machine, Simple hand	18	27
" machine, Swinging frame	18	29
" machine tool	18	34
" machine, Wet, for tools	18	33
" machines, Construction of	18	43
" machines, Chucks for use on	19	44
" machines, Hand surfacing	18	28
" " Plain	18	43
" " Universal	18	43
" materials	18	1
" milling cutters	19	57
" " "	27	3
" Noting the sparks while	19	13
" Object of	18	19
" Poole method of cylindrical	19	33
" Possibilities of	18	20
" Radial	18	42
" reamers	19	54
" "	26	18
" rests	19	27
" Set wheel method of	19	26
" solids of revolution	18	42
" " " "	19	1
" Surface	18	42
" tools, Speed of grindstones for	18	5
" Universal back rest for	19	30
" wheel and work, Surface speed of	19	8
" wheel, Influence of hardness of material on	19	4
" wheels	18	7
" " Directions for selecting	19	5
" " for internal	19	5
" " " external	19	5
" " Grade of	19	3
" " Grading of	18	25

	Sec.	Page.
Grinding wheels, Selection and use of	19	3
" " Selection of	18	25
" " Shapes of	19	6
" work, Speeds and feeds in	19	8
Grindstone, Action of water on	18	2
" Automatic truing device for	18	3
" Grade of, required for thin work	18	3
" mountings	18	3
Grindstones and oilstones	18	2
" Artificial	18	6
" Composition of	18	2
" Localities where obtained	18	2
" Speeds, Table of maximum	18	5
" Tool rests for	18	3
" Truing, by hand	18	4
Guide finger, Form and position of	19	51
" " Location of, in tool grinding	19	59
" " Mounting of, in tool grinding	19	57
Guides, Lining the, of a locomotive	23	39

H.	Sec.	Page.
Hack saws	20	17
Hammer, Ball-peen	20	8
" Cross peen	20	8
" Pneumatic	20	40
" Straight-peen	20	8
Hammers, Machinists'	20	7
Hand drilling machines	21	42
" grinding	18	27
" reamer, Ordinary	21	20
" reaming	21	20
" surfacing machines	18	28
" taps, Design of	25	23
" " Making	25	23
Handles, Special file	21	3
" Wooden file	21	3
Hardened squares	20	2
Hardening and tempering a die block	29	21
" " tempering the punch	29	23
" Effect of	25	25
" straightedges	28	21
Headstock of grinding machine, Adjustment of	19	15
Heat insulation	24	12
" Lubricants for carrying away	24	6
Helical cutting edges	26	17
Helical cutting edges for milling cutters	27	4
Hermaphrodite calipers	20	16
Hitch, Blackwall	24	38
" Bowline	24	40
" Catspaw	24	40
" Double	24	38
" Parbuckle	24	40
" Square-knot	24	40
" Timber	24	40
Hitches, knots, and bends	24	38
Hob-forming tool	27	21
" Width of and number of slots in	27	22
Hobs, Chaser for	25	29
" Design and use of	25	28
" Designing worm-wheel	27	20
" Worm-wheel	27	20
Hoists and cranes, Consideration of	22	38
" Block and tackle	22	39
" Chain	24	38
" Chain-block	22	39
" Handy tackle	22	39
" Pneumatic	23	40
Holes, Laying out bolt, in pipe flanges	21	69
" Locating	30	26
" " from a model	30	31
Hollow mill for annular milling	26	43
" mills	26	39
" " Inserted-blade	26	40
Hot bearings, Curing	24	4
Housings, Setting planer	23	5
Hydraulic jacks	22	12
" press, Construction of	22	31
" " Portable	22	31
Hydrostatic level	20	22

I.	Sec.	Page.
Indicator, Bath	24	13
" Brown & Sharpe	24	16
" Construction of a center	25	18
" Construction of a lathe	25	14
" Holder for	25	20
Indicators, Machinists'	24	13
Inside micrometer	20	14
Inspecting rope slings and lashes	24	32

	Sec.	Page.
Inspection and erection of lathes	22	48
" of lathes	23	52
" " milling machine	23	15
Inspector's report for a milling machine	23	16
" " for a lathe	22	54
Insulation of heat	24	12
Internal grinding	18	41
" "	19	37
Internal grinding fixtures, Construction of	19	40
Internal grinding, Influence of pressure of	19	37
Internal grinding, Wheels for	19	5
" lapping	19	64
Iron and steel, Blackening	24	46
" " " Bluing	24	46
" " " Browning, chemically	24	47
" blocking	22	3
" " Cylindrical	22	4

J.	Sec.	Page.
Jack, Adjustable top leveling	22	7
" Heavy erecting	22	10
" Laying out	22	9
" Lifting	22	10
" screws and hydraulic jacks	22	7
" Sectional	22	9
Jacks, Hydraulic	22	12
" Track and stone	22	11
Jib cranes	22	41
Jig, Definitions of	30	1
" designing, Examples of	30	16
" details	30	6
" Tapping	21	25
Jigs and jig making	30	1
" Box	30	2
" Clamp	30	2
" Clamping devices for	30	12
" Essential parts of	30	2
" Marking and recording	30	33
" Stop-pins for	30	15

K.	Sec.	Page.
Key fitting	21	45
" seat rule	20	9
" seats, Gauges for laying out	21	77
" " Chipping	20	36
" Sectional	24	29
Keys, Fitting	21	45
" " rectangular	21	45
Keys having curved section	21	46
" Provision for withdrawing	21	45
" Round	21	46
" Taper of	21	46
" Woodruff	21	47
Keyways, Broaching	21	50
Knot, Bowline	24	40
" Square	24	40
Knots, bends, and hitches	24	38

L.	Sec.	Page.
Lagging, cutting, and fitting	24	10
" engine cylinders	23	25
Lap, Using a	19	64
Lapping a conical hole	19	65
" circular arcs	19	68
" Definition and purpose of	19	63
" diamond tools	19	68
" External	19	65
" holes in milling cutters	19	66
" Internal	19	64
" odd shapes	19	66
" plain surfaces	19	67
" tools	19	63
" valve seats of piston valves	19	66
Lashings, Use of	24	31
Lathe beds, Seasoning	22	46
" " Testing	22	47
" erection	22	46
" " Systems in	22	46
" indicator, Construction of	25	14
" " Use of, in testing work	25	17
" inspection	22	52
Lathes, Erection and inspection of	22	48
" Inspector's report for	22	54
Laying out a compound die	29	18
" " " crank-arm	21	70
" " " crosshead	21	72
" " " gang die	29	15
" " an engine bed	21	75
" " Appliances for, Special	21	69
" " bolt holes in pipe flanges	21	69
" " cams for formed cutters	27	14
" " Coatings on which to make lines during	21	55
" " Definition of	21	53

	Sec.	Page.
Laying out dies.	29	12
" " Divisions of	21	54
" " ends for small rods	21	77
" " Examples of	21	69
" " General consideration of	21	53
" " jack	22	9
" " key seats, Gauge for	21	77
" " large journal cap.	21	70
" " plain die	29	14
" " plate for general work	21	65
" " plate for heavy work	21	62
" " plate for light work	21	62
" " plate, Revolving	21	67
" " tools	21	55
" " Tools and appliances used in	21	55
Leather wheels	18	24
Left-handed taps	25	33
Level, Hydrostatic	20	22
" Master	20	20
Levels, Spirit	20	20
Lifting jack	22	10
Limit of variation for limit gauges	27	34
Lines and circles, Division of	28	29
" Division of	28	40
Locomotive boiler, Testing a	23	43
" erecting pit	23	45
" erection	23	35
" erection, Comparison of methods of	23	46
" erection, Firing	23	43
" painting	23	45
" tender	23	45
Long splice	24	34
Lubricant, Cheap	24	8
" for cutting Babbitt metal	24	9
" Turpentine as a	24	46
Lubricants for carrying off heat	24	6
" " reducing friction	24	1
" for steel and wrought iron	24	7
" Introduction to	24	1
" Selecting	24	1
" When not used	24	7
Lubricating system	24	8
Lubrication of broaches	21	52

M.	Sec.	Page.
Machine foundations	22	13
" grinding operations, Classification of	18	41
" inspection	22	52
" shop tools, Keeping	24	22
" taps	25	26
" tool grinding	18	34
" tools, Painting of	24	13
Machinists' indicators	24	13
Marking, Applying, to surface plate	21	19
Master gauges	27	23
" level	20	20
Materials used for gauges	27	26
Measurements, Accumulation of errors in	25	10
" Approximate	25	8
" Classification of	25	8
" Precise	25	9
Mechanical division	28	40
Micrometer, Inside	20	14
Mill, Hollow, for annular milling	26	43
Mills, Hollow	26	39
" Solid hollow	26	39
Milling cutters	27	1
" " Backing-off attachment for	27	11
" " Formed	27	10
" " Grinding	27	3
" " Grinding teeth of	19	55
" " Helical edges of	27	4
" " Inserted helical tooth	27	6
" " Lapping holes in	19	66
" " Nicked teeth of	27	4
" " Number of cutting edges for solid	27	1
" " Spiral	27	4
" " Table of number of edges for inserted-tooth	27	8
" " with inserted teeth	27	5
" machine erection	23	11
" " inspection	23	15
Multiple die	29	3
" threaded taps	25	33

N.	Sec.	Page.
Naphtha	24	2

O.	Sec.	Page.
Oil, Coal	24	2
" Cylinder	24	3
" Filtering	24	7
" for general shop use	24	3
" holes and oil channels	24	5
" Kerosene	24	2
" Mineral sperm	24	2
" Paraffin	24	2
" separator	24	9
" Thinning	24	2
" Volatile	24	2
Oiling devices, Fitting the, of an engine	23	24
" methods	24	5
Oilstones, Artificial	18	7
" Composition of	18	6
" Kinds and qualities of	18	6
Originating a 60° angle	28	11
" tapers and angles.	28	7

P.	Sec.	Page.
Painting a locomotive	23	45
" machine tools	24	13
Parallel blocks	22	3
Parbuckle hitch	24	40
Pickle bed	24	21
Pickling solutions	24	20
Pinch bars	24	30
Pinning of files	21	14
Pipe cutting	21	35
" flanges, Laying out bolt holes in	21	69
" stock	21	36
" threading	21	36
" threads	21	27
" tongs	21	39
" tools, General consideration of	21	38
" vise	20	24
" work, General consideration of	21	35
" wrench, Use of rope for	21	41
" wrenches	21	39
Piston valves, Lapping the seats of	19	64
Pit, Assembling a large rope wheel in	22	27
" Erecting, for locomotives	23	45
" Large masonry floor	22	21
" Use of erecting	22	25
Pits, Floor	22	19
Plain grinding machine	18	43
Planer bed, Leveling	23	4
" " Supporting	23	3
" cross-rail, Squaring	23	6

	Sec.	Page.
Planer erection	23	1
" housings, Setting	23	5
" Preparation for shipment	23	8
Planers, Classes of	23	2
" Erecting large	23	8
" Manner of erecting	23	3
" Securing, to foundation	23	9
Plates, Laying out	21	62
" Surface	21	56
Plug and ring gauges	27	28
Plug and ring gauges, Proportions of	27	33
Plumbago	24	4
Plumb-bobs	20	18
Pneumatic hammer	20	40
" hoists	22	40
Polishing and buffing, Distinction between	18	22
" and buffing, Object of	18	20
" machine, Belt	18	22
" Material used in	18	23
" wheel, Enclosed	18	21
" wheels and belts	18	20
Poole method of cylindrical grinding	19	33
Portable benches	20	30
" drill, Crank-driven	21	44
" hydraulic press	22	31
Press fits	22	32
" " Precaution for	22	35
" Hydraulic	22	29
" Portable	22	31
Prick punches	20	8
Protractor	20	5
" Bevel	20	3
Punch	29	1
" Fitting the	29	22
" Hardening and tempering a	29	23
Punches, Prick and center	20	8

R.	Sec.	Page.
Racks for keeping tools	24	24
Ram	24	17
Ratchet, Special	21	44
" wrenches	21	31
Rawhide drilling	24	9
Reading decimals	25	6
Reamer and cutter grinding	19	50
" fluting	26	14
" grinding	19	54
" Hand	21	21
" Step	21	21

	Sec.	Page.
Reamers, Adjustable	26	28
" Allowance for grinding in	26	17
" Chattering in	26	12
" Chucking	26	27
" Classification of	26	11
" Clearance of	26	15
" Enlarging worn solid	26	25
" Expanding	26	29
" Formed	26	11
" "	26	33
" Four-square	26	33
" Grinding	26	18
" Grooving	26	20
" Helically fluted	26	17
" Number of cutting edges on	26	13
" Rose	26	26
" Shell	26	25
" Straight	26	11
" Table of cutting edges for	26	14
" Taper	26	11
" "	26	23
" Temper of	26	22
Reaming	21	20
" Advantages of vertical	21	22
" by hand, Object of	21	20
" Example of vertical	21	23
" holes in line	21	24
" stand	20	27
" Taper	21	22
Reciprocating parts of a horizontal engine	23	23
Reciprocating parts, Placing the, of a vertical engine	23	33
Redrawing	29	27
" dies	29	45
" Reverse	29	46
Reference gauges	27	23
Rest, Fixed or back, for grinding	19	28
" Universal back, for grinding	19	30
Rests, Application of universal, in grinding	19	33
" Flexible, for grinding	19	29
" Follower, for use in grinding	19	28
" Rigid, for grinding	19	28
" Special, for grinding	19	33
Rigging	24	29
Ring and plug gauges	27	28
Ring and plug gauges, Proportions of	27	33
Ring gauge, Making a	27	30
Rope for pipe wrench	21	41
" slings and lashes, Inspection of	24	32
" wheel, Assembling a large	22	27
Rose reamers	26	26
Rubber, Cutting soft	24	45
" Working vulcanized	24	45
Rule, Key-seat	20	10

S.	Sec.	Page.
Safe edge file	20	44
Saws, Hack	20	17
Scotch drill	21	44
Scrap heap	24	28
Scraper, Bent or hook	21	17
" Flat	21	16
" Holding the	21	18
" Proper angle for holding the	21	20
" Three-corner	21	16
Scrapers and scraping	21	15
Scraping	20	44
" a plain surface	21	19
Scratch gauge	20	7
Scriber	20	9
Self-centering die	29	2
Seller's tool-grinding machine	18	35
Set wheel, Method of grinding	19	26
Setting plain slide valve	23	26
Shaping dies	29	26
Sharpening formed cutters	19	61
Shear in dies	29	24
Shellac emery wheels	18	12
Shell reamers	26	25
Shop practice, General hints on	24	1
Short splice	24	34
Shrink-fit allowance, Table for	23	37
" fits	22	36
" " Special heater for	22	36
Shrinking, Sectional key for use during	24	29
Side chisel	20	34
Silicate emery wheels	18	12
Slings, Use of	24	31
Snap gauges	27	36
" " Making	27	39
" limit gauges	27	38
Soda kettle	24	17
Sparks, Noting the, while grinding	19	13
Special gauges	28	23
Spindle for internal grinding	19	39
Spiral milling cutters	27	4
Spirit levels	20	20

	Sec.	Page.
Splice, Eye	24	34
" Long	24	34
" Making a long	24	36
" " an eye	24	37
" Short	24	34
Splices, Definition of	24	33
Splicing, Instrument used for.	24	34
Spring die proportions, Table of	26	7
" dies	26	6
" drawing die	29	34
Square, Adjustable	20	3
" Center	20	5
" Graduated	20	2
" knot	24	40
" Making a try	28	12
Squares, Hardened	20	2
" Testing and trying	28	14
" threaded taps	25	33
Stationary engine, Erecting a vertical	23	31
Steel and iron, Bluing	24	46
" " " Browning, chemically	24	47
" " wrought iron, Lubricants for	24	7
Step reamer	21	21
Stone jacks	22	11
Straightedge, Box-section	21	58
" Finishing testing edge of	28	21
" Knife-edge	21	57
" "	28	20
" Originating a	28	18
Straightedges	21	57
" Cast-iron	21	58
" Forms of	28	19
" Hardening	28	21
Straightening taps	25	25
Stripper plate	29	1
Surface gauges	20	6
" grinding	18	41
" "	19	45
" " Holding work for	19	47
" " machine	19	46
" " on planer	19	45
" " Present state of art	19	45
" " Selection of wheels for	19	47
" plates	21	56
" Preparation of, for scraping	21	19
" Scraping a plain	21	19
Surface speed of wheel and work in grinding	19	8
Surfaces, Lapping plain	19	67

T.	Sec.	Page.
Table for dividing circles	21	60
" " shrink-fit allowance.	22	37
" of cutting edges for inserted-tooth cutter	27	8
" of cutting edges for milling cutters	27	1
" of cutting edges for reamer	26	14
" of forced-fit allowances.	22	36
" of maximum grindstone speeds	18	5
Tackle and block	22	39
Tackles, Handy	22	29
Tannite emery wheels	18	13
Tap, Collapsing, Design of	25	34
" Hardening, Effect of	25	25
" holders, Forming helical end of	25	37
" " Operation of releasing	25	36
" " Proportions in	25	38
" holders, Purpose and design of	25	36
" holders, Releasing	25	36
" shank, Construction of	25	35
Taps, Adjustable, Design of	25	30
" Collapsing	25	33
" Design and construction of	25	21
" Effect of hardening on	25	25
" Errors in	25	27
" Examples of adjustable.	25	30
" Hand	25	23
" Left-handed	25	33
" Machine	25	26
" Multiple-threaded	25	33
" Number of flutes for	25	21
" Square-threaded	25	33
" Straightening	25	25
" Taper	25	26
" " relief	25	26
Taper, Different definitions of.	28	3
" gauge, Laying out a	28	6
" of keys	21	46
" press fits	22	34
" reamers	26	23
" reaming	21	22
Tapers and angles, Originating	28	7
Tapping	21	24

	Sec.	Page.
Tapping, General consideration of	21	24
" holes square	21	24
" jig	21	25
" Producing smooth threads in	21	26
Teeth, Nicking of, for milling cutters	27	4
Temper of reamers	26	22
Temperature, Influence of, while grinding	19	11
Tempering a die block	29	21
" " punch	29	23
Templet for foundation bolts for machines	22	14
" " symmetrical dies, Filing	29	19
" Foundation-bolt, for engine	23	28
Tender, Locomotive	23	45
Testing emery wheels	18	17
" lathe beds	22	47
" the crank-shaft and bearings	23	22
" the locomotive boiler	23	43
Thread-cutting die and stock	21	33
" dies	26	1
" Outside	21	33
Threads, Pipe	21	27
Timber hitch	24	40
Time element in work	21	26
Tongs, Pipe	21	39
Tool, Forming, for formed milling cutters	27	17
" grinding, Grade of wheels for	18	38
" " machine, Gisholt	18	37
" " machine, Seller's	18	35
" " Selection of wheels for	18	38
" grinding, Use of universal grinding machine for	19	57
" racks	24	24
" rest for grindstones	18	3
" " " hand tool-grinding machine	18	31
Tools, Cabinets and cupboards for keeping	24	23
" Drawers for keeping	24	23
" employed in bench work and laying out	20	2
" Hand grinding machine for	18	32
" Keeping of machine shop	24	22
Tools, machine, Painting of	24	13
" Speed of grindstones for grinding	18	5
" used in laying out	21	35
Toolmaker, Work of the	25	7
Toolmaking	25	1
" Commercial considerations of	25	2
" Construction in	25	3
" Definition of	25	1
" Design in	25	2
" Introduction to	25	1
" Limitations of	25	13
" Limitations of accuracy in	25	13
" Limitations of commerce in	25	13
" Possibility of improvement in	25	2
" Special tools used in	25	14
Tool-room work	25	1
Track and stone jacks	22	11
Trammels and dividers	20	11
Trestles	22	2
Trolley system	22	42
Truing device, Automatic, for grindstones	18	3
" " for emery wheel	18	34
" emery wheels	19	10
" grindstones by hand	18	4
Try square, Making a	28	12
" squares, Test block for	28	15
" " Testing	28	14
Turpentine	24	2
" as a lubricant	24	46
Types of jigs	30	2

U.

	Sec.	Page.
Universal grinding machine	18	46
" " machines	18	43
Useful information	24	45

V.

	Sec.	Page.
Valve setting, General consideration of	23	26
" " Plain slide	23	26
Valves, Lapping the seats of piston	19	66
Vertical engines, Erecting, on foundation	23	35
Vibration, Absorption of, while grinding	19	33
" Influence of, in grinding work	19	4

	Sec.	Page.
Vise jaws	20	25
" Pipe	20	24
" Rapid motion	20	24
" Screw	20	23
" Special forms of	20	26
" Swivel	20	24
Vitrified emery wheels	18	12
Vulcanite emery wheels	18	12

W.	Sec.	Page.
Waste, Keeping greasy	24	6
Water, Action of, on a grindstone	18	2
" cut	24	7
Wet grinding machine for tools	18	33
Wheel, Assembling a large rope	22	27
" Combination emery	19	4
" method of grinding, Set	19	26
" Truing emery	19	10
" Use of cup, for cutter grinding	19	55
Wheels, Brush	18	24
" Buffing	18	22
" for external grinding	19	5
" " internal grinding	19	5
" Grinding	18	7
" Leather	18	24
Wheels, Polishing	18	20
" Selection and use of, in grinding	19	3
" " of grinding	18	25
" Shapes of emery	19	6
" Relation between grade of, and work	18	25
Wood blocking	22	2
Wooden block floor	22	17
" caliper	20	14
Woodruff keys	21	47
Wood screws. Putting in	24	45
Work, Driving between centers while grinding	19	16
" Grinding of conical	19	41
" Influence of hardness of, in grinding	19	4
" Steadying the, while grinding	19	27
" Time element in	24	26
Worm-wheel hobs	27	20
Wrench, Double-end	21	27
" Special double	21	28
Wrenches, Pipe	21	39
" Ratchet	21	31
" Single-end	21	28
" Socket	21	30
" Socket extensions for	21	31